1000-1099

WTC1-181-LERA

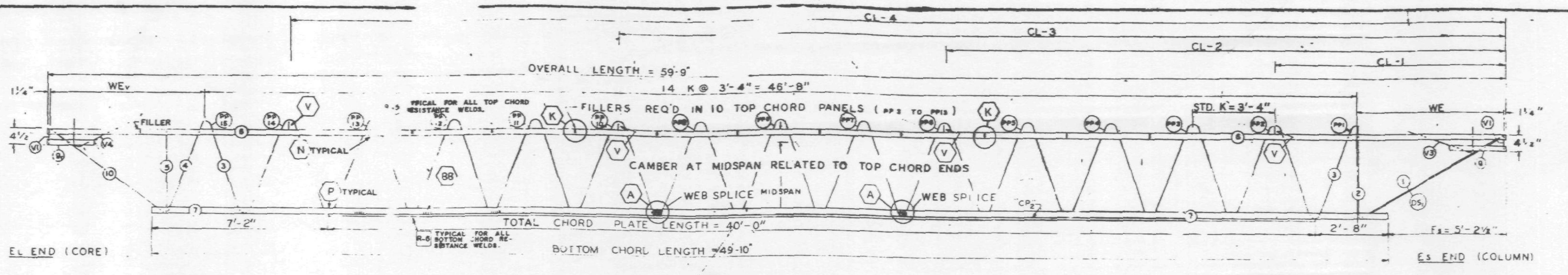

TRUSS ELEVATION

FABRICATION REQUIRMENTS	DESIGN	TOLERANCE
CAMBER AT MIDSPAN	2 1/16"	± 3/8"
DESIGN DEPTH	29"	± 1/4"
PANEL "K"	3'-4"	± 1/4"
OVERALL LENGTH	59'-9"	± 3/8"
WEB DEPTH	7/8"	± 1/4"

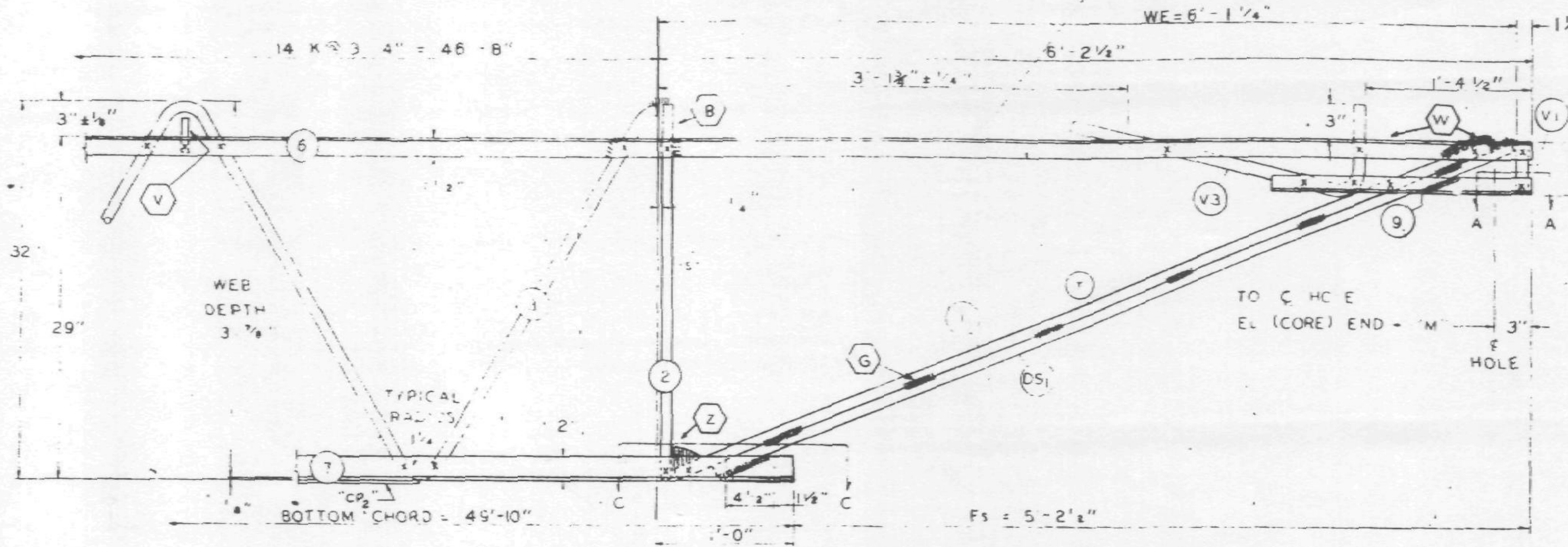

Es END (COLUMN)

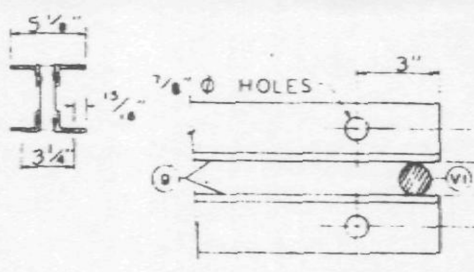

SECTION A-A

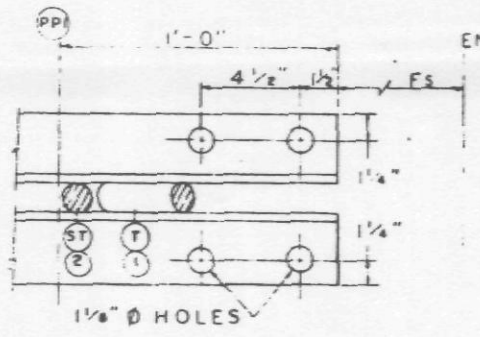

SECTION C-C

ALL PANEL POINTS RESISTANCE WELDED (x).
ARC WELDS INDICATED AT SHADED AREAS.
AND AT BOTTOM CHORD WEB SPLICES.
ALL WELD DETAILS SHOWN ON SHEETS ST290, ST291, ST292, AND ST280.
SEE SHEET ST295 FOR V1, V3, & V4 DETAILS.
CHORD PLATE DETAILS SHOWN ON SHEET ST280.
LETTERS IN HEXAGON INDICATE WELD DETAIL, ie., (A).
LETTERS AND NUMBERS IN SQUARES INDICATE RESISTANCE WELD STRENGTH IDENTIFIED IN THE QUALITY CONTROL PROGRAM, ie., [R-6].

DAMPING UNIT CONNECTION PLATE ATTACHED TO BOTTOM CHORD (COL END) IN FIELD ASSEMBLY BY CONTRACT WTC 223.00.

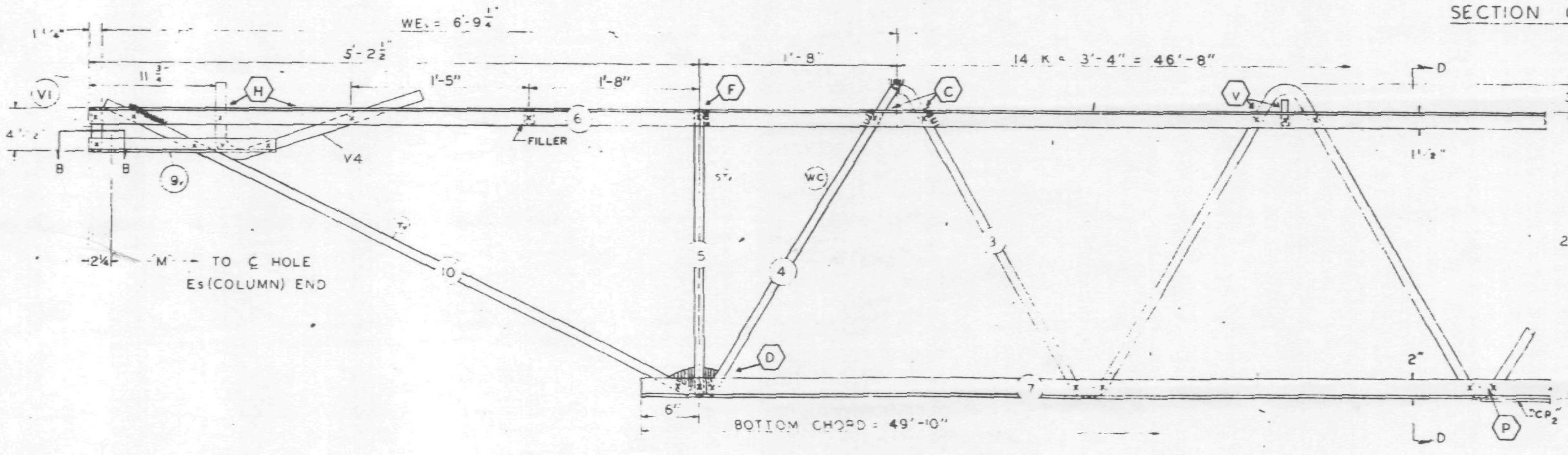

EL END (CORE)

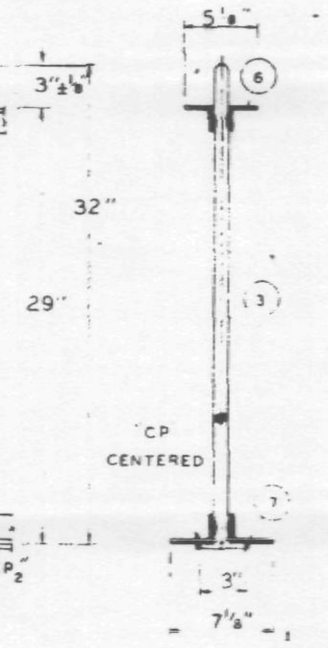

SEC D-D

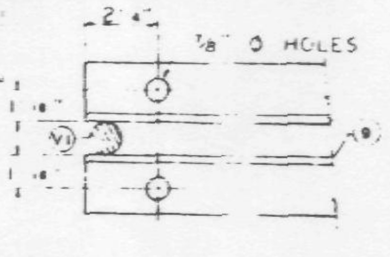

SECTION B-B

NO.	DATE	REVISION	BY
2	6-22-68	GENERAL	T.M.C.
1	5-27-68	T LENGTH, WELD, CHORD PLATE	T.M.C.

REF DRWGS

7-AB1-4	4-15-68
7-AB1-52	2-15-68
7-AB1-53	4-1-68
7-AB4-50 & 50 2	10-20-67
7-AB3-2	1-3-68
7-AB4-50 5	10-20-67

PAINT
LACLEDE ELECTROCOAT
RED NO 1000

TRUSS DESIGNATION	TOP CHORD TWO ANGLES				BOTTOM CHORD TWO ANGLES				MAIN WEB "W"					FILLER		"M" ℄ HOLE	CONNECTION FILLERS			CHORD PLATE			
	MK	TYPE STEEL	CHORD SIZE	LENGTH	MK	TYPE STEEL	CHORD SIZE	LENGTH	MK	TYPE STEEL	DIA	LENGTH	NO. OF K	NO	DIA		NO.	DIA.	LENGTH	MK	TYPE STEEL	SIZE	LENGTH
C32T7A-599	6	A242	2"x1½"x .31	59'-9"	7	A36	3"x2"x .33	49'-10"	3	A36	1.09	87'-2½"	14 @ 3'-4" = 46'-8"	11	1.09	59'-3¾"	4	1.09"	3"	CP2	A36	¼x3	40'-0"

COLUMN END

Es END	TRUSS DESIGNATION	BEARING ANGLES				WE	DIAGONAL "T" STRUT				VERTICAL "ST" STRUT				END STIFFENER MK. V1			END STIFFENER MK. V3			DOUBLE STRUT			
		MK	TYPE STEEL	CHORD SIZE	LENGTH		MK	TYPE STEEL	DIA	LENGTH	MK	TYPE STEEL	DIA	LENGTH	TYPE STEEL	DIA	LENGTH	TYPE STEEL	DIA.	LENGTH	MK	TYPE STEEL	DIA	LENGTH
	C32T7A-599	9	A242	2"x1½"x .25	2'-0"	6'-1¼"	1	A36	1.09	6'-3⅛"	2	A36	1.09	2'-7⅞"	A36	1.09	4⅜"	A36	1.09	2'-9½"	DS1	A242	.92	6'-3⅛"

CHECK DIMENSION FOR TRUSS FAB
LOCATION OF TRANS. TRUSS

CL-1	CL-2	CL-3	CL-4	Fs
9'-6½"	22'-10½"	36'-2⅛"	49'-6½"	5'-2½"

CORE END

EL END	TRUSS DESIGNATION	BEARING ANGLES				WEL	DIAGONAL "T1" STRUT				VERTICAL "ST1" STRUT				END STIFFENER MK. V1			END STIFFENER MK. V2			END STIFFENER MK. V4			WEB "Wc"					WEB "WT"				
		MK	TYPE STEEL	CHORD SIZE	LENGTH		MK	TYPE STEEL	DIA	LENGTH	MK	TYPE STEEL	DIA.	LENGTH	TYPE STEEL	DIA.	LENGTH	TYPE STEEL	DIA.	LENGTH	TYPE STEEL	DIA.	LENGTH	MK	TYPE STEEL	PCS	DIA	LENGTH	MK	TYPE STEEL	PCS	DIA.	LENGTH
	C32T7A-599	9V	A242	2"x1½"x .25	1'-7"	6'-9¼"	10	A242	1.14	5'-6½"	5	A242	1.14	2'-4¾"	A242	1.14	4½"	—	—	—	A 242	1.14	2'-2½"	4	A242	1	1.14	3'-0½"	—	—	—	—	—

STEEL TRUSS DETAILS
FOR
WORLD TRADE CENTER
FOR
THE PORT OF NEW YORK AUTHORITY

FLOOR TRUSS C32T7A 59'-9" OVERALL
WORLD TRADE CENTER TOWER A+B

FABRICATION BY LACLEDE STEEL COMPANY		
FABRICATED AT MADISON, ILLINOIS	DESIGN DRAWING NO 7-AB1-4 7-AB3-2	PLATE
APPROVED FOR FABRICATION BY JW FOR PONYA DATE 6/25/68	DRAWN BY lwh DATE APR. 18, 1968	
APPROVED FOR FABRICATION BY FOR FABRICATOR DATE	CHECKED BY T.M. CHURA DATE APR. 18, 1968	IN CHARGE OF PROD DEV
DETAILED BY A.C. WEBER	FABRICATION CONT NO WTC 221	SHEET NO ST207A

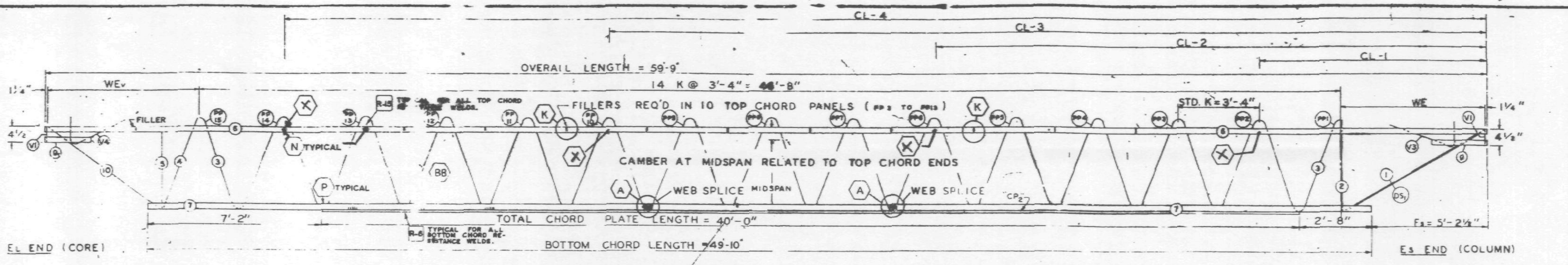

TRUSS ELEVATION

FABRICATION REQUIREMENTS	DESIGN	TOLERANCE
CAMBER AT MIDSPAN	1"	± 3/8"
DESIGN DEPTH	29"	± 1/4"
PANEL "K"	3'-4"	± 1/4"
OVERALL LENGTH	59'-9"	± 3, 8"
WEB DEPTH	31 7/8"	± 1/4"

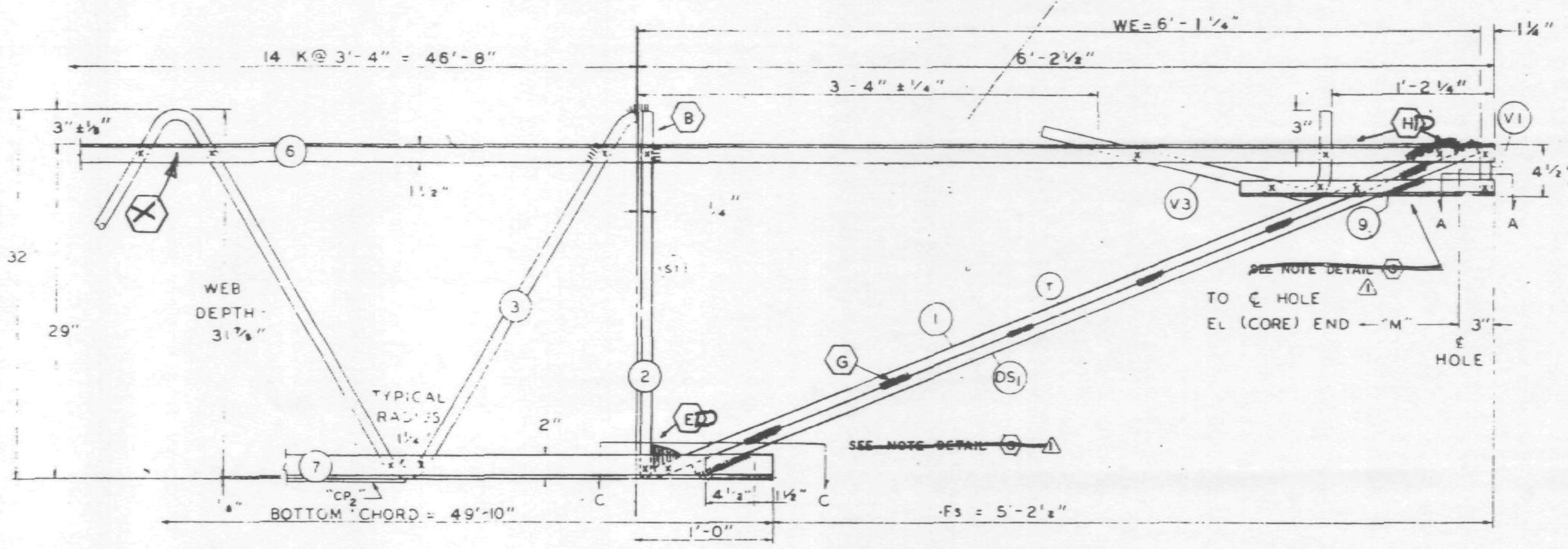

Es END (COLUMN)

ALL PANEL POINTS RESISTANCE WELDED (x).
ARC WELDS INDICATED AT SHADED AREAS.
AND AT BOTTOM CHORD WEB SPLICES.
ALL WELD DETAILS SHOWN ON SHEETS ST290, ST291, AND ST280.
SEE SHEET ST295 FOR V1, V3, & V4 DETAILS.
CHORD PLATE DETAILS SHOWN ON SHEET ST280.
LETTERS IN HEXAGON INDICATE WELD DETAIL, ie., (A).
LETTERS AND NUMBERS IN SQUARES INDICATE RESISTANCE WELD STRENGTH IDENTIFIED IN THE QUALITY CONTROL PROGRAM, ie., [R-6].

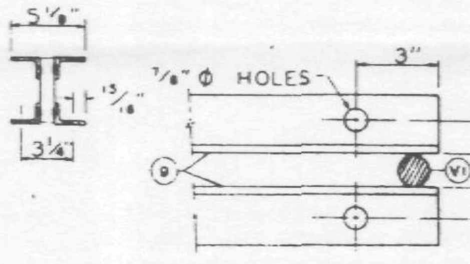

SECTION A-A

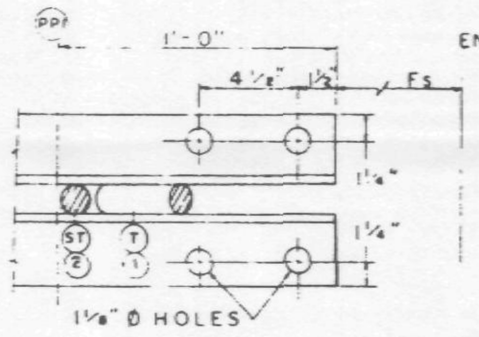

SECTION C-C

DAMPING UNIT CONNECTION PLATE ATTACHED TO BOTTOM CHORD (COL END) IN FIELD. ASSEMBLY BY CONTRACT WTC 223.00.

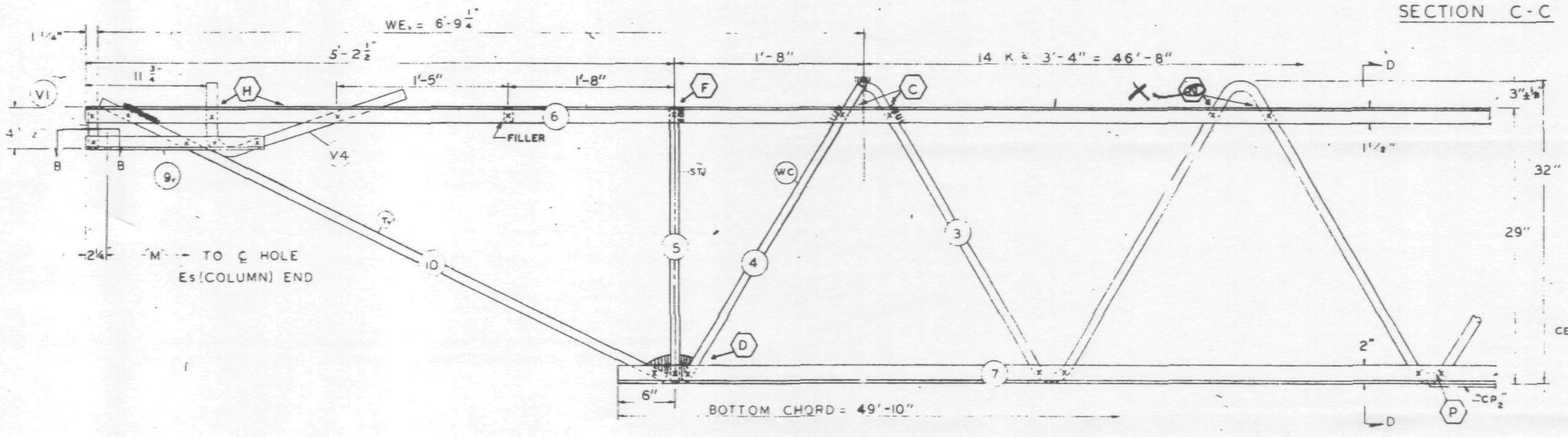

EL END (CORE)

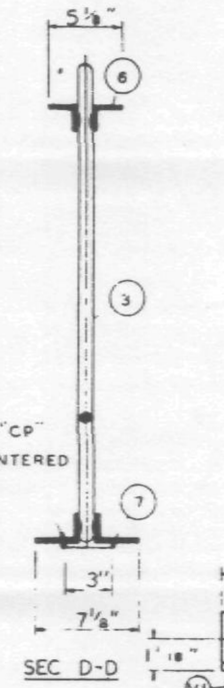

SEC D-D

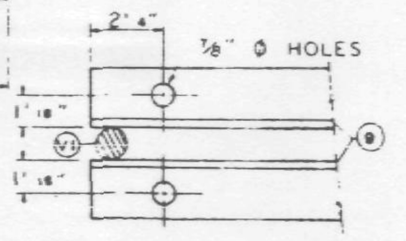

SECTION B-B

NO.	DATE	REVISION	
1	5-27-68	T LENGTH, WELD, CHORD PLATE	T.M.C.

REF DRWGS

7-AB1-4	4-15-68
7-AB1-52	2-15-68
7-AB1-53	4-1-68
7-AB4-50 & 50 2	10-20-67
7-AB3-2	1-3-68
7-AB4-50 5	10-20-67

PAINT
LACLEDE ELECTROCOAT
RED NO 10001

TRUSS DESIGNATION	TOP CHORD TWO ANGLES				BOTTOM CHORD TWO ANGLES				MAIN WEB "W"					FILLER		"M" C/C HOLE	TRUSS DATA		CHORD PLATE			
	MK	TYPE STEEL	CHORD SIZE	LENGTH	MK	TYPE STEEL	CHORD SIZE	LENGTH	MK	TYPE STEEL	DIA	LENGTH	NO. OF K	NO.	DIA				MK	TYPE STEEL	SIZE	LENGTH
C32T7A-599	6	A242	2"x1½"x 31	59'-9"	7	A36	3"x 2" x 33	49'-10"	3	A36	1.09	87'-2½"	14 @ 3'-4" = 46'-8"	11	1.09	59'-3¾"			CP2	A36	¼x3	40'-0" (1)

COLUMN END

Es END	TRUSS DESIGNATION	BEARING ANGLES				WE	DIAGONAL "T" STRUT				VERTICAL "ST" STRUT				END STIFFENER MK. V1			END STIFFENER MK. V3			DOUBLE STRUT			
		MK	TYPE STEEL	CHORD SIZE	LENGTH		MK	TYPE STEEL	DIA	LENGTH	MK	TYPE STEEL	DIA	LENGTH	TYPE STEEL	DIA	LENGTH	TYPE STEEL	DIA	LENGTH	MK	TYPE STEEL	DIA	LENGTH
	C32T7A-599	9	A242	2"x1½"x 25	1'-10"	6'-1¼"	1	A36	1.09	6'-3⅛" (1)	2	A36	1.09	2'-7⅞"	A36	1.09	4¾"	A36	1.09	2'-9½"	DS1	A242	.75	6'-3⅛" (1)

CORE END

EL END	TRUSS DESIGNATION	BEARING ANGLES				WEv	DIAGONAL "Tv" STRUT				VERTICAL "STv" STRUT				STIFFENER MK. V1			STIFFENER MK. V2			STIFFENER MK. V4			WEB "WC"					WEB "WT"				
		MK	TYPE STEEL	CHORD SIZE	LENGTH		MK	TYPE STEEL	DIA	LENGTH	MK	TYPE STEEL	DIA.	LENGTH	TYPE STEEL	DIA.	LENGTH	TYPE STEEL	DIA.	LENGTH	TYPE STEEL	DIA.	LENGTH	MK	TYPE STEEL	PCS	DIA	LENGTH	MK	TYPE STEEL	PCS	DIA.	LENGTH
	C32T7A-599	9v	A242	2"x1½"x 25	1'-7"	6'-9½"	10	A242	1.14	5'-6½"	5	A242	1.14	2'-4⅝"	A242	1.14	4½"	—	—	—	A242	1.14	2'-2½"	4	A242	1	1.14	3'-0½"	—	—	—	—	—

CHECK DIMENSION FOR TRUSS FAB. LOCATION OF TRANS. TRUSS				
CL-1	CL-2	CL-3	CL-4	Fs
9'-6½"	22'-10½"	36'-2½"	49'-6½"	5'-2½"

STEEL TRUSS DETAILS
FOR
WORLD TRADE CENTER - N.Y.C.
FOR
THE PORT OF NEW YORK AUTHORITY

FLOOR TRUSS C32T7A 59'-9" OVERALL
WORLD TRADE CENTER TOWER A-B

FABRICATION BY LACLEDE STEEL COMPANY

FABRICATED AT MADISON, ILLINOIS		DESIGN DRAWING NO 7-AB1-4 7-AB3-2	PLATE
APPROVED FOR FABRICATION BY FOR PONYA	DATE	DRAWN BY lwh DATE APR. 18, 1968	
APPROVED FOR FABRICATION BY FOR FABRICATOR	DATE	CHECKED BY T.M. CHURA DATE APR. 13, 1968	IN CHARGE OF PROD DEV
DETAILED BY R.C. WEBER LACLEDE STEEL CO		FABRICATION CONT NO WTC 221	SHEET NO ST207A

6/13/68 WSB

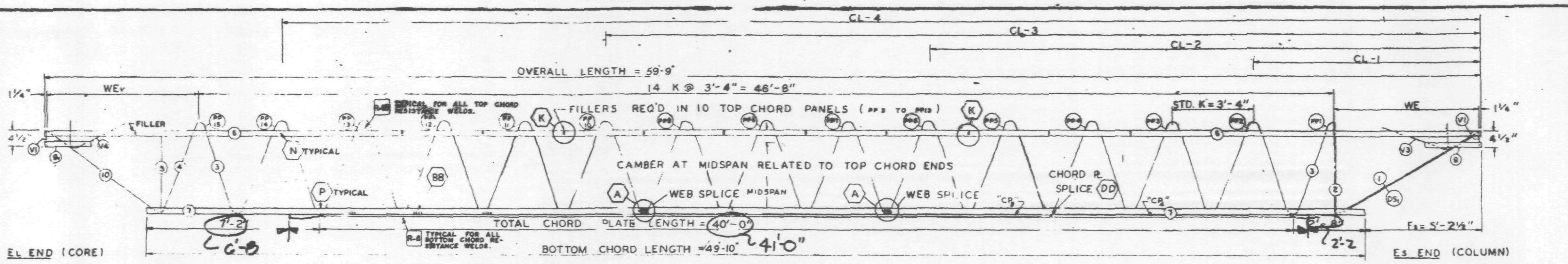

TRUSS ELEVATION

FABRICATION REQUIRMENTS	DESIGN	TOLERANCE
CAMBER AT MIDSPAN	1"	± 3/8"
DESIGN DEPTH	28"	± /4"
PANEL "K"	3'-4"	± 1/4"
OVERALL LENGTH	59' 9	± 1/8"
WEB DEPTH	31 7/8"	± 1/ "

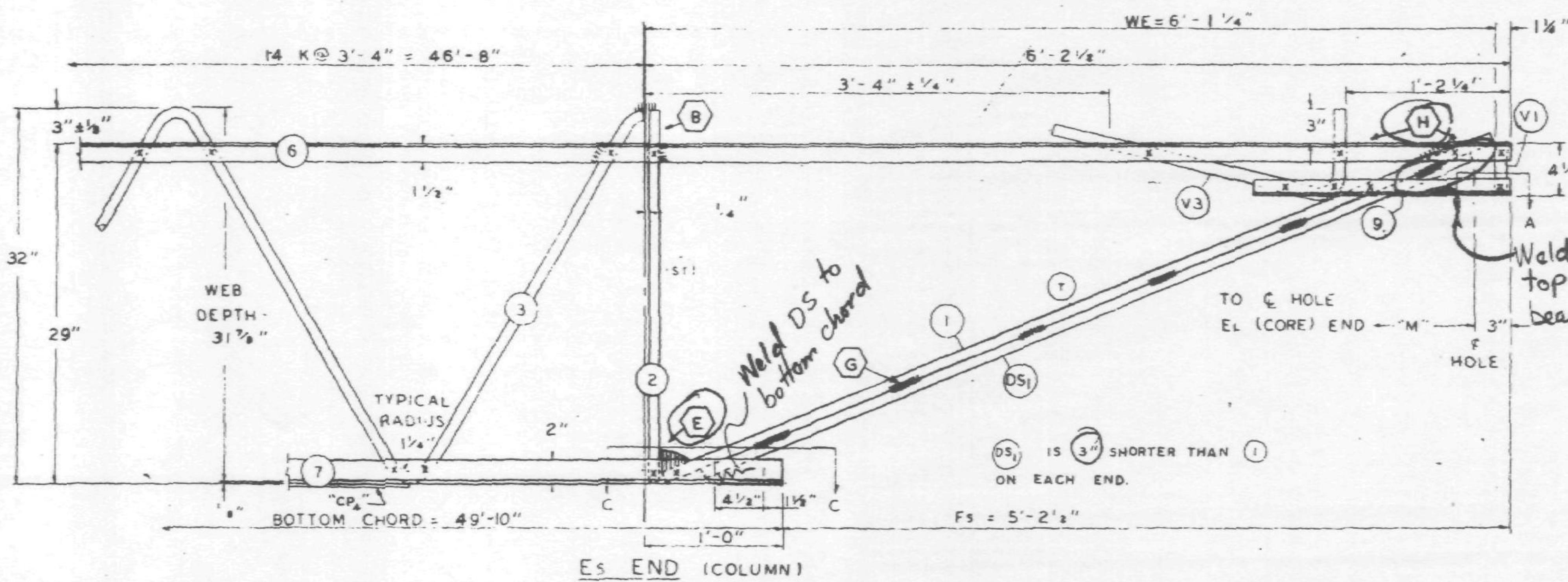

Es END (COLUMN)

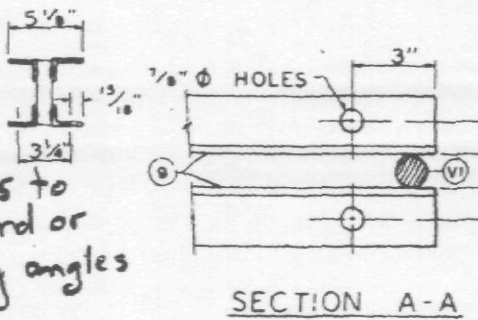

SECTION A-A

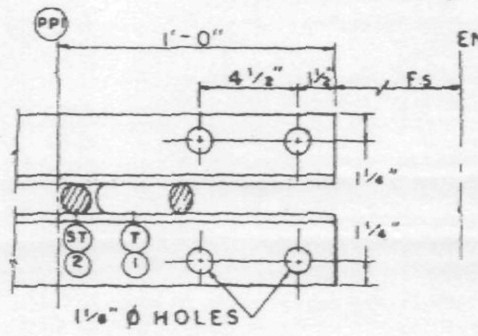

SECTION C-C

ALL PANEL POINTS RESISTANCE WELDED (x).
ARC WELDS INDICATED AT SHADED AREAS.
AND AT BOTTOM CHORD WEB SPLICES.
ALL WELD DETAILS SHOWN ON SHEETS ST290, ST291, AND ST280.
SEE SHEET ST295 FOR V1, V3, & V4 DETAILS.
CHORD PLATE DETAILS SHOWN ON SHEET ST280.
LETTERS IN HEXAGON INDICATE WELD DETAIL, ie., (A).
LETTERS AND NUMBERS IN SQUARES INDICATE RESISTANCE WELD STRENGTH IDENTIFIED IN THE QUALITY CONTROL PROGRAM, ie., [R-6].

DAMPING UNIT CONNECTION PLATE ATTACHED TO BOTTOM CHORD (COL END) IN FIELD.
ASSEMBLY BY CONTRACT WTC 223.00.

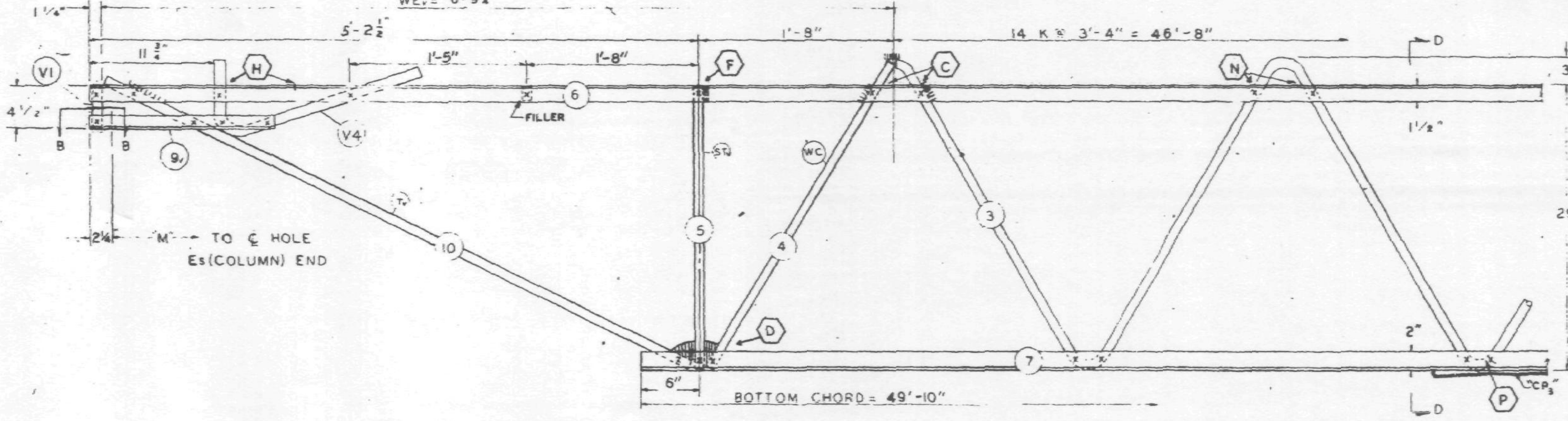

EL END (CORE)

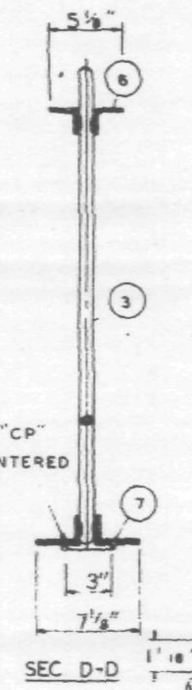

SEC D-D

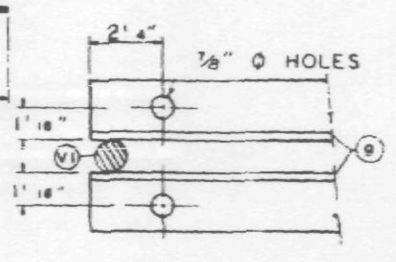

SECTION B-B

REF DRWGS.

7-AB1-4	4-15-68
7-AB1-52	2-15-68
7-AB1-53	4-1-68
7-AB4-50 & 50 2	10-20-67
7-AB3-2	1-3-68
7-AB4-50 S	10-20-67

PAINT
LACLEDE ELECTROCOAT
RED NO. 10001

TRUSS DESIGNATION	TOP CHORD TWO ANGLES MK	TYPE STEEL	CHORD SIZE	LENGTH	BOTTOM CHORD TWO ANGLES MK	TYPE STEEL	CHORD SIZE	LENGTH	MAIN WEB "W" MK	TYPE STEEL	DIA	LENGTH	NO. OF K	FILLER NO	DIA	"M" C/C HOLE	TRUSS DATA		CHORD PLATES MK	TYPE STEEL	SIZE	LENGTH	MK	TYPE STEEL	SIZE	LENGTH
C32T7A-599	6	A242	2"x1½"x 31	59'-9"	7	A36	3"x 2" x 33	49'-10"	3	A36	1.09	87'-2½"	14 @ 3'-4" = 46'-8"	11	1.09	59'-3 ¾"			CP2	A36	¼x3	30'-0"	CB	A36	¼"x3"	10'-0"

COLUMN END

Es END TRUSS DESIGNATION	BEARING ANGLES MK	TYPE STEEL	CHORD SIZE	LENGTH	WE	DIAGONAL "T" STRUT MK	TYPE STEEL	DIA	LENGTH	VERTICAL "ST" STRUT MK	TYPE STEEL	DIA	LENGTH	END STIFFENER MK. V1 TYPE STEEL	DIA	LENGTH	MK. V3 TYPE STEEL	DIA	LENGTH	DOUBLE STRUT MK	TYPE STEEL	DIA	LENGTH
C32T7A-599	9	A242	2"x1½"x .25	1'-10"	6'-1¼"	1	A36	1.09	6'-5"	2	A36	1.09	2'-7⅞"	A36	1.09	4⅜"		1.09	2'-9½"	DS1	A242	.92	5'-11"

CHECK DIMENSION FOR TRUSS FAB. LOCATION OF TRANS. TRUSS CL-1	CL-2	CL-3	CL-4	Fs
9'-6½"	22'-10½"	36'-2½"	49'-6½"	5'-2½"

CORE END

EL END TRUSS DESIGNATION	BEARING ANGLES MK	TYPE STEEL	CHORD SIZE	LENGTH	WEv	DIAGONAL "Tv" STRUT MK	TYPE STEEL	DIA	LENGTH	VERTICAL "STv" STRUT MK	TYPE STEEL	DIA	LENGTH	END STIFFENER MK. V1 TYPE STEEL	DIA	LENGTH	MK. V2 TYPE STEEL	DIA	LENGTH	MK. V4 TYPE STEEL	DIA	LENGTH	WEB "WC" MK	TYPE STEEL	PCS	DIA	LENGTH	WEB "WT" MK	TYPE STEEL	PCS	DIA	LENGTH
C32T7A-599	9v	A242	2"x1½"x .25	1'-7"	6'-9¼"	10	A242	1.14	5'-6½"	5	A242	1.14	2'-4¾"	A242	1.14	4½"	—	—	—	A242	1.14	2'-2½"	4	A242	1	1.14	3'-0½"	-	—	—	—	—

STEEL TRUSS DETAILS
FOR
WORLD TRADE CENTER N.Y.C.
FOR
THE PORT OF NEW YORK AUTHORITY

FLOOR TRUSS C32T7A 59'-9" OVERALL
WORLD TRADE CENTER TOWER A-B

FABRICATION BY LACLEDE STEEL COMPANY		
FABRICATED AT MADISON, ILLINOIS	DESIGN DRAWING NO 7-AB1-4 7-AB3-2	PLATE
APPROVED FOR FABRICATION DATE BY FOR PONYA	DRAWN BY lwh DATE APR. 18, 1968	
APPROVED FOR FABRICATION DATE BY FOR FABRICATOR	CHECKED BY T.M. CHURA DATE APR. 18, 1968	IN CHARGE OF PROD. DEV.
DETAILED BY LACLEDE STEEL CO.	FABRICATION CONT NO WTC 221	SHEET NO ST207A

FABRICATION REQUIREMENTS	DESIGN	[illegible]
CAMBER AT MIDSPAN	$2\frac{1}{2}$"	[illegible]
DESIGN DEPTH	29"	[illegible]
PANEL "K"	3'-4"	± 1/[illegible]
OVERALL LENGTH	59-8	± 3/8"
WEB DEPTH	31 7/8"	± 1/4"

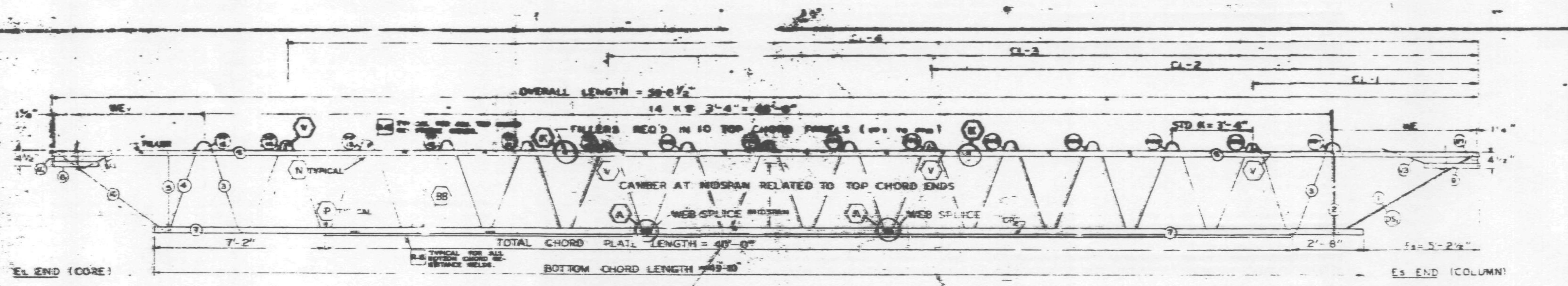

TRUSS ELEVATION

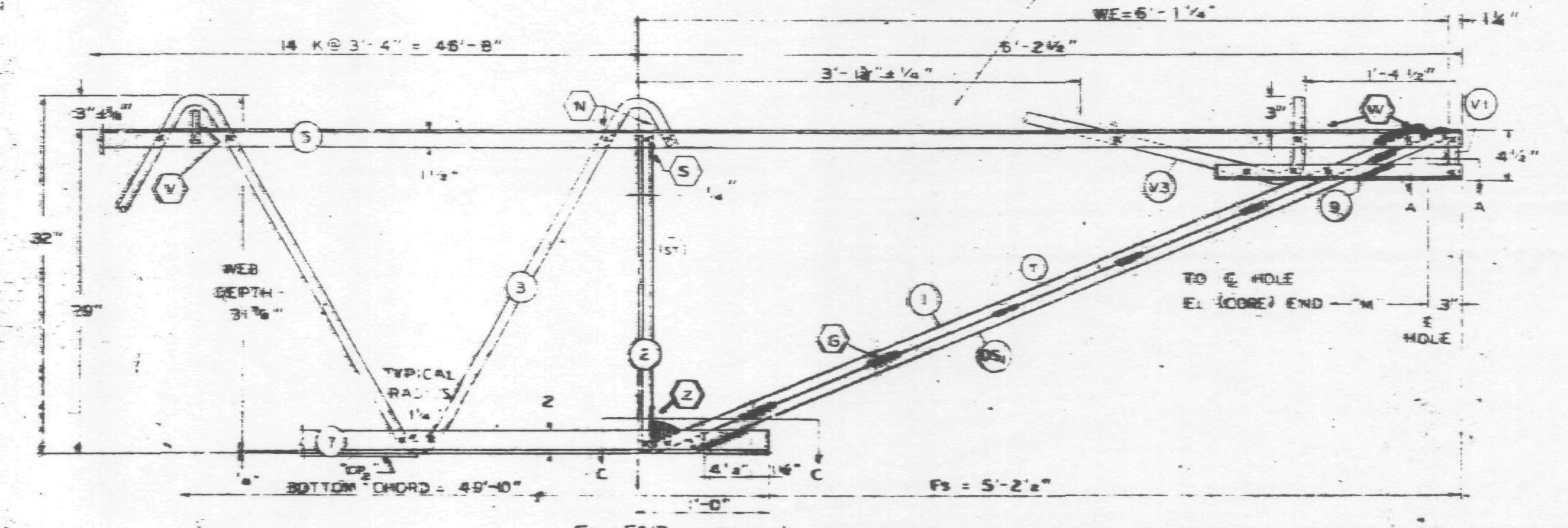

E_S END (COLUMN)

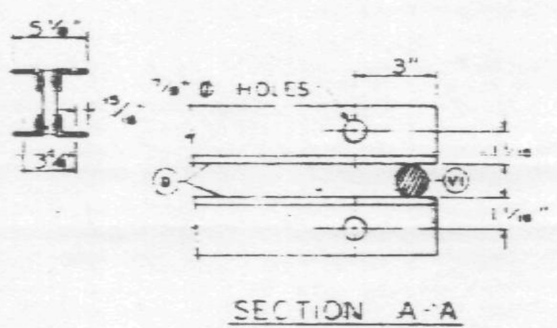

SECTION A-A

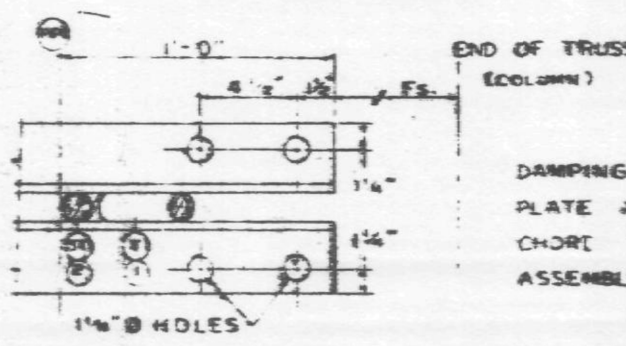

SECTION C-C

ALL PANEL POINTS RESISTANCE WELDED (x).
ARC WELDS INDICATED AT SHADED AREAS
AND AT BOTTOM CHORD WEB SPLICES
ALL WELD DETAILS SHOWN ON SHEETS ST290, ST291, ST292, ST293.
AND ST280.
SEE SHEET ST295 FOR V1, V3, & V4 DETAILS.
CHORD PLATE DETAILS SHOWN ON SHEET ST280.
LETTERS IN HEXAGON INDICATE WELD DETAIL, ie. A
LETTERS AND NUMBERS IN SQUARES INDICATE RESISTANCE WELD STRENGTH IDENTIFIED IN THE QUALITY CONTROL PROGRAM, ie. R-6

DAMPING UNIT CONNECTION PLATE ATTACHED TO BOTTOM CHORD (COL END) IN FIELD ASSEMBLY BY CONTRACT WTC 223.00.

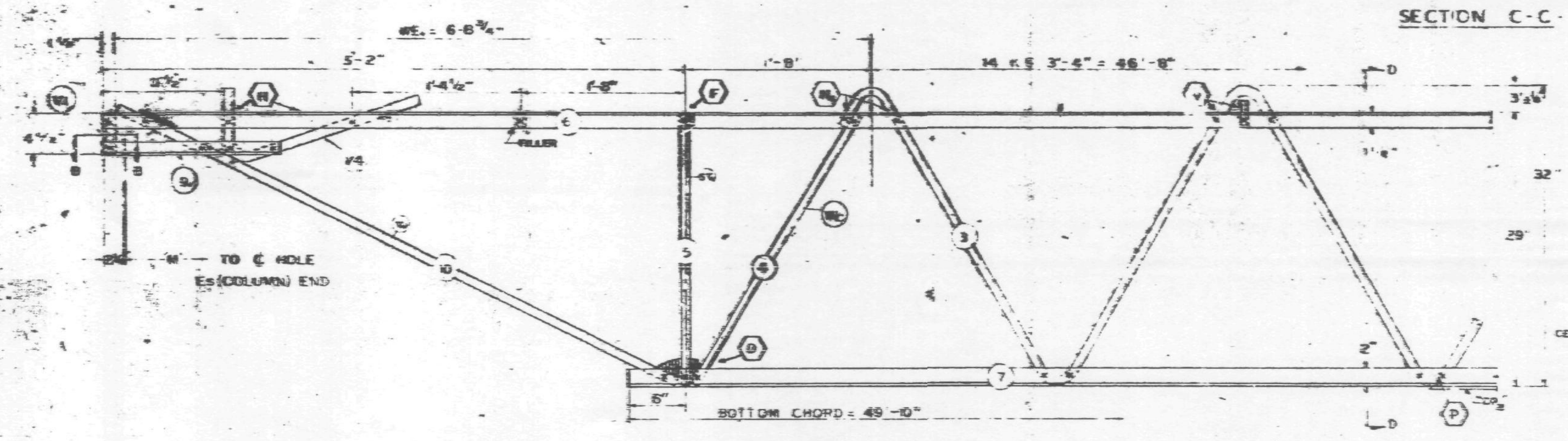

E_L END (CORE)

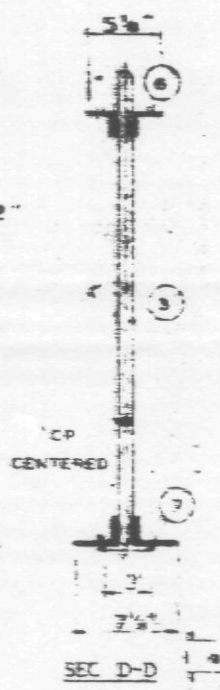

SEC D-D

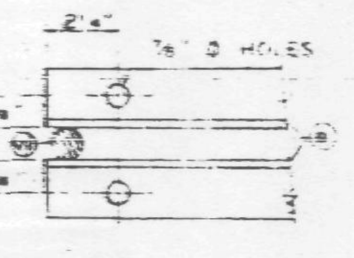

SECTION B-B

REF. DRWGS

7-AB1-4	7-30-[illegible]
7-AB1-52	2-15-[illegible]
7-AB1-53	2-22-[illegible]
7-AB4-50	[illegible]
7-AB3-2	1-3-[illegible]
7-AB4-505	10-20-[illegible]

PAINT
LACLEDE ELECTROCOAT
RED NO 10004

TRUSS DESIGNATION	TOP CHORD TWO ANGLES				BOTTOM CHORD TWO ANGLES				MAIN WEB "W"					FILLER		"M" ℄ HOLE	CONNECTION FILLERS			CHORD PLATE			
	MK	TYPE STEEL	CHORD SIZE	LENGTH	MK	TYPE STEEL	CHORD SIZE	LENGTH	MK	TYPE STEEL	DIA	LENGTH	NO. OF K	NO	DIA		NO	DIA	LENGTH	MK	TYPE STEEL	SIZE	LENGTH
C32T7B-5985	6	A242	2"x1 1/2"x 31	59-8 1/2	7	A36	3"x2"x 33	49'-10"	3	A36	1.09	88'-1 1/4"	14 @ 3'-4" = 46'-8"	11	1.09	59-3 1/4"	4	1.09	3"	CP	A36	[illegible]	40'-0"

COLUMN END

E_S END	TRUSS DESIGNATION	BEARING ANGLES				WE	DIAGONAL "T" STRUT				VERTICAL "ST" STRUT				END STIFFENER						DOUBLE STRUT			
		MK	TYPE STEEL	CHORD SIZE	LENGTH		MK	TYPE STEEL	DIA	LENGTH	MK	TYPE STEEL	DIA	LENGTH	TYPE STEEL	DIA	LENGTH	TYPE STEEL	DIA	LENGTH	MK	TYPE STEEL	DIA	LENGTH
	C32T7B-5985	9	A242	2"x1"x"x 25	2'-3"	6'-1 1/4"	1	A36	1.09	6'-3 1/4"	2	A36	1.09	2'-[illegible]	A36	1.09	4 [illegible]"	A36	[illegible]	[illegible]	[illegible]	A242	.92	6'-3 1/4"

CHECK DIMENSION FOR TRUSS FAB.

LOCATION OF TRANS. TRUSS				
CL-1	CL-2	CL-3	CL-4	F_S
9'-6 1/2"	22'-10 1/2"	35'-2 1/2"	49'-6 1/2"	5'-2 1/2"

CORE END

E_L END	TRUSS DESIGNATION	BEARING ANGLES				WE	DIAGONAL "T" STRUT				VERTICAL "ST" STRUT				END STIFFENER									WEB "W"					WEB "W"				
		MK	TYPE STEEL	CHORD SIZE	LENGTH		MK	TYPE STEEL	DIA	LENGTH	MK	TYPE STEEL	DIA	LENGTH	TYPE STEEL	DIA	LENGTH	TYPE STEEL	DIA	LENGTH	TYPE STEEL	DIA	LENGTH	MK	TYPE STEEL	PCS	DIA	LENGTH	MK	TYPE STEEL	PCS	DIA	LENGTH
	C32T7B-5985	8	A242	2"x1 1/2"x 25	1'-6"	6'-8 3/4"	10	A242	1.14	5'-6 1/2"	5	A242	1.14	2'-[illegible]	A36	1.14	4 [illegible]"	—	—	—	A36	1.09	2'-2[illegible]	4	[illegible]	1	1.09	2'-8"	—	—	—	—	—

STEEL TRUSS DETAILS
FOR
WORLD TRADE CENTER N.Y.C.
FOR
THE PORT OF NEW YORK AUTHORITY

FLOOR TRUSS C32T7B 59'-8 1/2" OVERALL
WORLD TRADE CENTER TOWER A-B

FABRICATION BY LACLEDE STEEL COMPANY

FABRICATED AT MADISON, ILLINOIS	DESIGN DRAWING NO 7-AB1-4 7-AB3-2
APPROVED FOR FABRICATION FOR PONYA	DRAWN BY [illegible] DATE FEB 6, 1969
APPROVED FOR FABRICATION BY	CHECKED BY [illegible] DATE FEB. 11, 1969
DETAIL LACLEDE STEEL CO.	FABRICATION CONT NO WTC 221	SHEET NO ST29[illegible]

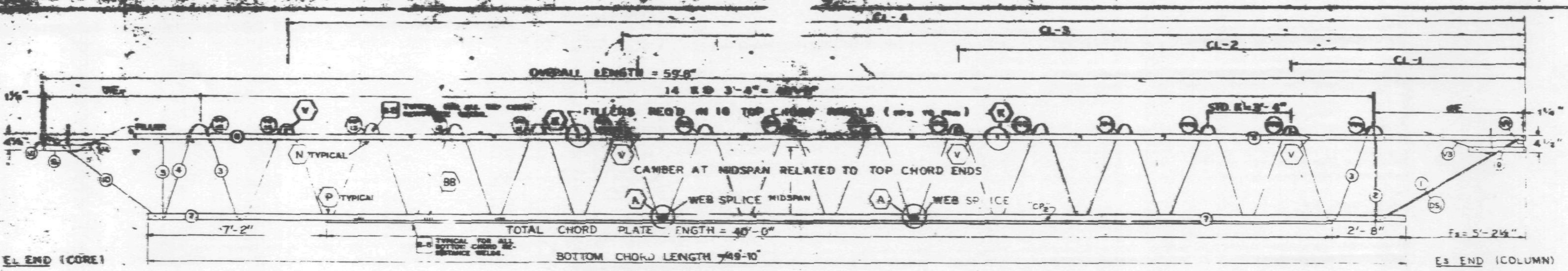

TRUSS ELEVATION

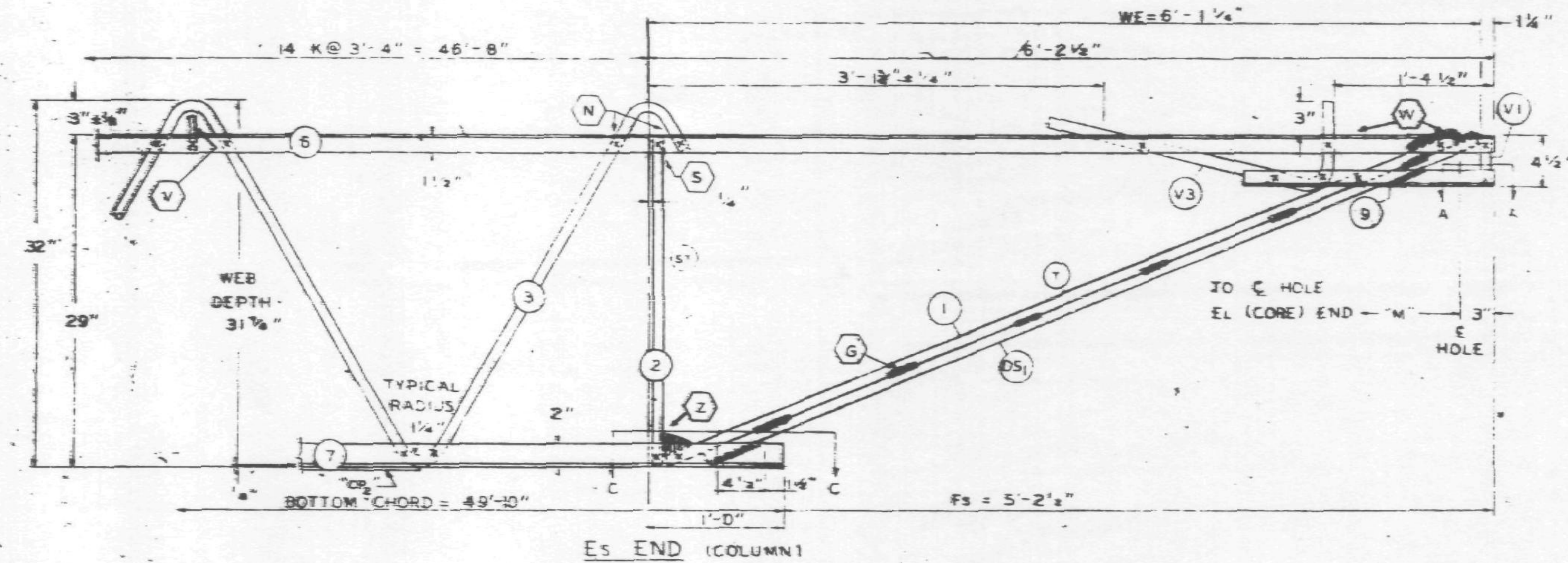

Es END (COLUMN)

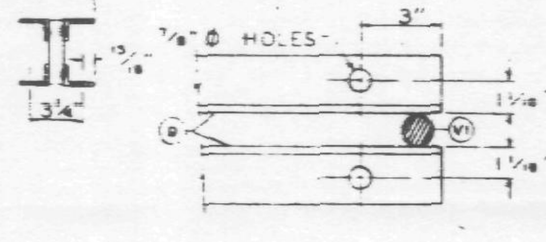

SECTION A-A

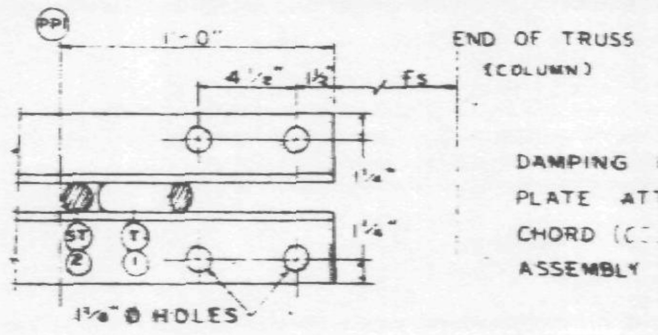

SECTION C-C

ALL PANEL POINTS RESISTANCE WELDED (K).
ARC WELDS INDICATED AT SHADED AREAS.
AND AT BOTTOM CHORD WEB SPLICES (midspan).
ALL WELD DETAILS SHOWN ON SHEETS ST290, ST291, ST292, ST293, AND ST280.
SEE SHEET ST295 FOR V1, V3, & V4 DETAILS.
CHORD PLATE DETAILS SHOWN ON SHEET ST280.
LETTERS IN HEXAGON INDICATE WELD DETAIL, i.e. (A).
LETTERS AND NUMBERS IN SQUARES INDICATE RESISTANCE WELD STRENGTH IDENTIFIED IN THE QUALITY CONTROL PROGRAM, i.e. R-6.

DAMPING UNIT CONNECTION PLATE ATTACHED TO BOTTOM CHORD (CL END) IN FIELD ASSEMBLY BY CONTRACT WTC 223.00.

FABRICATION REQUIREMENTS		
	[illegible]	[illegible]
CAMBER AT MIDSPAN	[illegible]	[illegible]
DESIGN DEPTH	[illegible]	[illegible]
PANEL "K"	[illegible]	1/[illegible]
OVERALL LENGTH	59'-8"	± 3/8"
WEB DEPTH	7/8"	± 1/4"

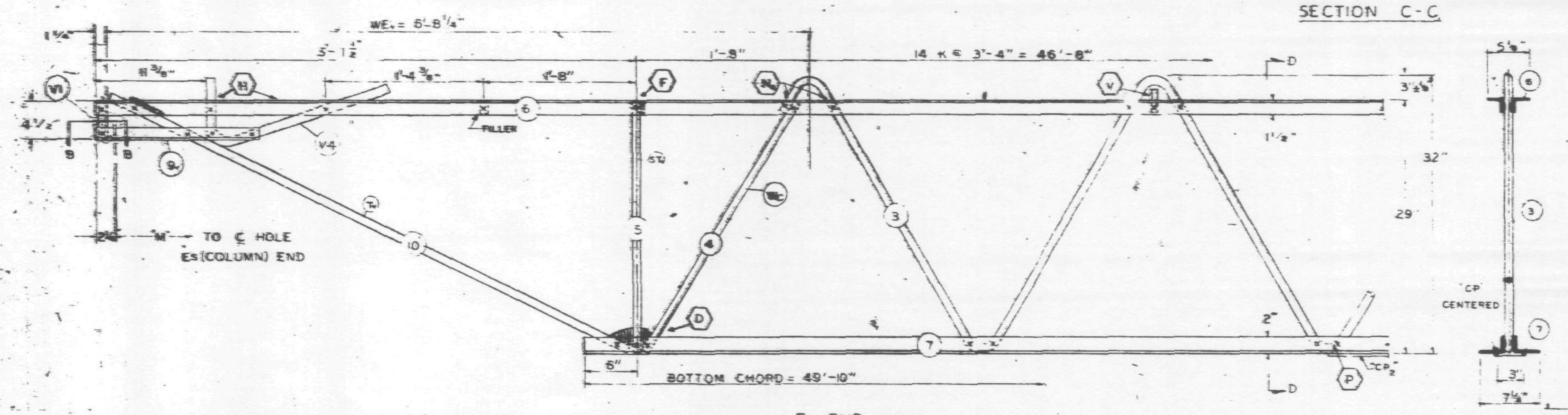

EL END (CORE)

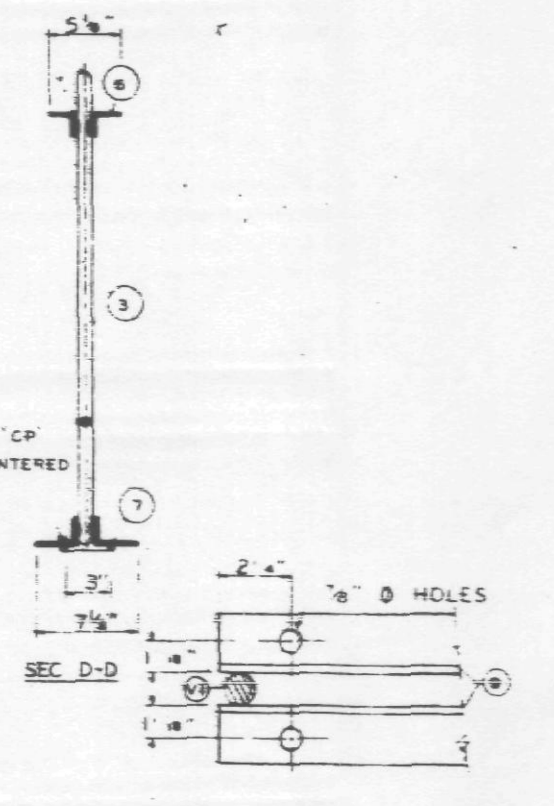

SECTION B-B

NO.	DATE	REVISION	BY

REF DRWGS

7-ABI-4	7-22-68
7-AB-52	2-15-68 (?)
7-ABI-53	7-22-68 (?)
7-AB4-50	6-1-68
7-AB3-2	1-3-68
7-AB4-58.5	10-20-67

PAINT
LACLEDE ELECTROCOAT
RED NO 1000

TRUSS DESIGNATION	TOP CHORD TWO ANGLES				BOTTOM CHORD TWO ANGLES				MAIN WEB "W"					FILLER		"M" ℄ HOLE	CONNECTION FILLERS			CHORD PLATE			
	MK	TYPE STEEL	CHORD SIZE	LENGTH	MK	TYPE STEEL	CHORD SIZE	LENGTH	MK	TYPE STEEL	DIA	LENGTH	NO. OF K	NO.	DIA		NO.	DIA.	LENGTH	MK	TYPE STEEL	SIZE	LENGTH
C32T7C-598	6	A242	2"x1½"x 31	59'-8"	7	A36	3"x2"x 33	49'-10"	3	A36	1.09	88'-1¼"	14 @ 3'-4" = 46'-8"	11	1.09	59'-3¾"	4	1.09"	3"	CP₂	A36	¼x3	40'-0"

COLUMN END

Es END	TRUSS DESIGNATION	BEARING ANGLES				WE	DIAGONAL "T" STRUT				VERTICAL "ST" STRUT				END STIFFENER MK. V1			END STIFFENER MK. V3			DOUBLE STRUT			
		MK	TYPE STEEL	CHORD SIZE	LENGTH		MK	TYPE STEEL	DIA	LENGTH	MK	TYPE STEEL	DIA	LENGTH	TYPE STEEL	DIA	LENGTH	TYPE STEEL	DIA	LENGTH	MK	TYPE STEEL	DIA	LENGTH
	C32T7C-598	9	A242	2"x1½"x 25	2'-3"	6'-1¼"	1	A36	1.09	6'-3⅛"	2	A36	1.09	2'-4⅜"	A36	1.09	4⅝"	A36	1.09	2'-9⅛"	DS₁	A242	.32	6'-3⅛"

CORE END

EL END	TRUSS DESIGNATION	BEARING ANGLES				WE	DIAGONAL "T" STRUT				VERTICAL "ST" STRUT				END STIFFENER MK. V1			END STIFFENER MK. V2			END STIFFENER MK. V4			WEB "WC"					WEB "WT"				
		MK	TYPE STEEL	CHORD SIZE	LENGTH		MK	TYPE STEEL	DIA	LENGTH	MK	TYPE STEEL	DIA	LENGTH	TYPE STEEL	DIA	LENGTH	TYPE STEEL	DIA	LENGTH	TYPE STEEL	DIA	LENGTH	MK	TYPE STEEL	PCS	DIA	LENGTH	MK	TYPE STEEL	PCS	DIA	LENGTH
	[illegible]7C-598	9	A242	2"x1½"x 25	1'-6"	6'-8[illegible]	10	A242	1.14	5'-5[illegible]	5	A242	1.14	2'-4[illegible]	A242	1.14	4[illegible]	—	—	—	A242	1.14	2'-2[illegible]	4	A242	1	1.16	2'-10"	—	—	—	—	—

CHECK DIMENSION FOR TRUSS FAB				
LOCATION OF TRANS. TRUSS				
CL-1	CL-2	CL-3	CL-4	Fs
9'-6½"	22'-10½"	36'-2½"	49'-6½"	5'-2¼"

STEEL TRUSS DETAILS
FOR
WORLD TRADE CENTER - N.Y.C.
FOR
THE PORT OF NEW YORK AUTHORITY

FLOOR TRUSS C32T7C 59'-8" OVERALL
WORLD TRADE CENTER TOWER A-B

FABRICATION BY LACLEDE STEEL COMPANY
FABRICATED AT MADISON, ILLINOIS
DESIGN DRAWING NO 7-ABI-4 7-AB3-2 PLATE
APPROVED FOR FABRICATION FOR PONYA DATE 2/28/69
DRAWN BY [illegible] DATE FEB [illegible] 1969
APPROVED FOR FABRICATION FOR FABRICATOR DATE
CHECKED BY [illegible] DATE FEB 11 1969
IN CHARGE OF PROD. [illegible]
DETAILED LACLEDE STEEL CO.
FABRICATION CONT NO WTC 221
SHEET NO [illegible]

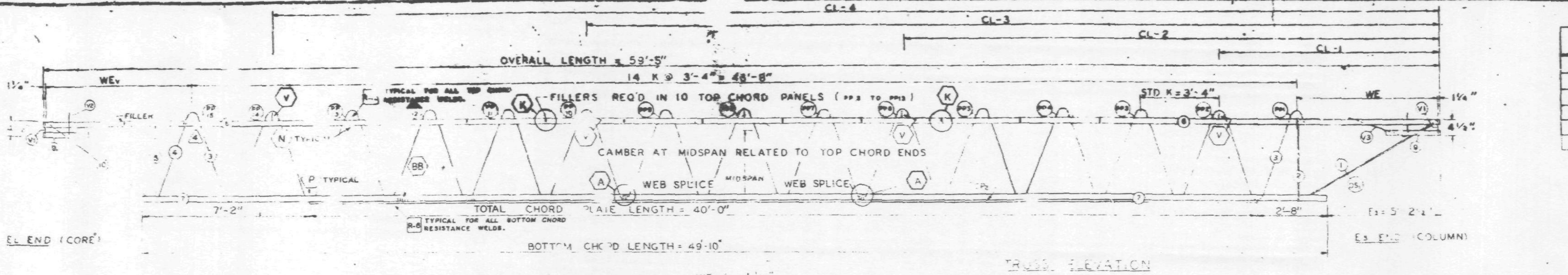

FABRICATION REQUIREMENTS

	DESIGN	
CAMBER AT MIDSPAN	2 1/16"	[illegible]
DESIGN DEPTH	20"	[illegible]
PANEL "K"	3'-4"	[illegible]
OVERALL LENGTH	59'	[illegible]
WEB DEPTH	[illegible]	[illegible]

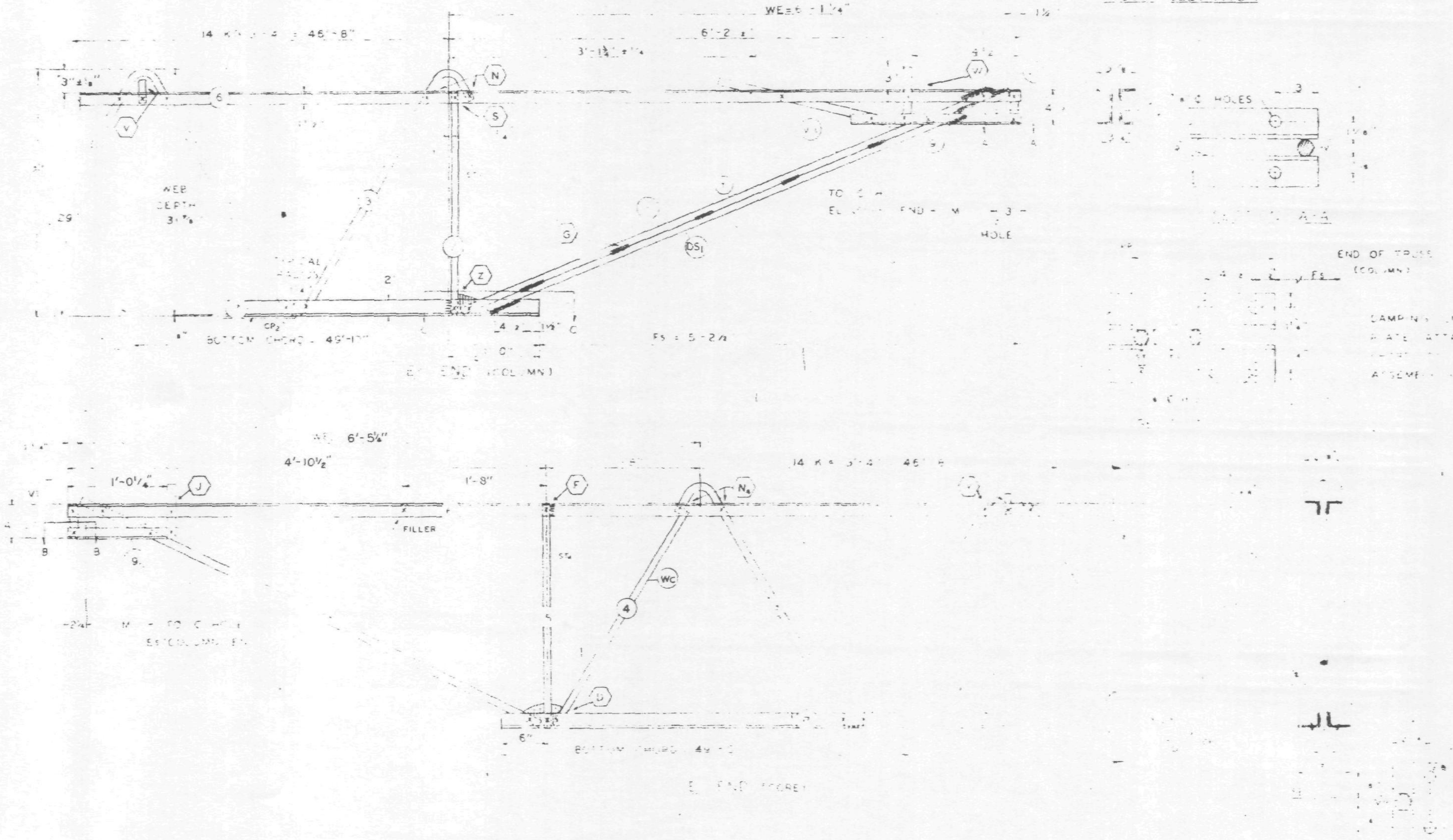

ALL PANEL POINTS RESISTANCE WELDED [illegible] ARC WELDS INDICATED AT SHADED AREAS AND AT BOTTOM CHORD WEB SPLICE [illegible]. ALL WELD DETAILS SHOWN ON SHEETS ST290, ST291, ST292, ST293 AND ST28[illegible].

CHORD PLATE DETAILS SHOWN ON SHEET ST280 SEE SHEET ST295 FOR V1, V2, & V3 DETAILS. LETTERS IN [illegible]AGON INDICATE WELD DETAIL, ie., A. [illegible] IN SQUARES INDICATE RESISTANCE WELD STRENGTH IDENTIFIED IN THE QUALITY CONTROL PROGRAM, ie., R-6.

[illegible] CONNECTION [illegible] ATTACHED TO BOTTOM [illegible] N FIELD [illegible]NTRACT WTC 223.00.

NO.	DATE	REVISION	BY

REF. DRWGS

7-AB1-4	7-22-68
7-AB1-52	2-15-68
7-AB1-53	7-22-68
7-AB4-[illegible]	8-1-68
7-AB3-2	[illegible]-68
7-AB4-[illegible]	0-20-67

TRUSS DESIGNATION	BEARING ANGLES MK	TYPE STEEL	CHORD SIZE	LENGTH	BOTTOM CHORD MK	TYPE STEEL	SIZE	LENGTH	MAIN WEB MK	TYPE STEEL	DIA	LENGTH	NO. OF K	FILLER NO.	DIA	C HOLE	CONNECT. FILLERS NO.	DIA	LENGTH	CHORD PLATE
C32T?D 595	5	A242	2 [illegible]	59'-5"	[illegible]	A36	3 x 2 x 3	[illegible]	[illegible]	A36	1.09	68'-1 1/4"	14 @ 3'-4" = 46'-8"	11	1.09	58'-11 3/4"	4	1.09	[illegible]	[illegible]

COLUMN END

EL END	TRUSS DESIGNATION	BEARING ANGLES MK	TYPE STEEL	CHORD SIZE	LENGTH	WE	DIAGONAL STRUT MK	TYPE STEEL	DIA	LENGTH	VERTICAL STRUT MK	TYPE STEEL	DIA	LENGTH	END STIFFENER MK V1 TYPE STEEL	DIA	LENGTH	MK V3 TYPE STEEL	DIA	LENGTH	DOUBLE STRUT MK	TYPE STEEL	DIA	LENGTH
	C32T?D 595	3	A242	2 x [illegible] x 2[illegible]	2'-3	6'-[illegible]		A36	.09	6'-3 [illegible]"	2	A36	.09	2'-4 7/8"	A36	.09	4 3/8		.09	2'-9 [illegible]"	DS	A242	.92	6'-3 [illegible]"

CHECK DIMENSION FOR TRUSS FAB LOCATION OF TRANS TRUSS

CL-1	CL-2	CL-3	CL-4	Fs
9'-6 [illegible]"	22'-0 [illegible]"	36'-2 [illegible]"	49'-6 [illegible]"	5'-2 [illegible]"

CORE END

EL END	TRUSS DESIGNATION	BEARING ANGLES MK	TYPE STEEL	CHORD SIZE	LENGTH	WE	DIAGONAL STRUT MK	TYPE STEEL	DIA	LENGTH	VERTICAL STRUT MK	TYPE STEEL	DIA	LENGTH	END STIFFENER MK V1 TYPE STEEL	DIA	LENGTH	MK V2 TYPE STEEL	DIA	LENGTH	MK V4 TYPE STEEL	DIA	LENGTH	WEB WC MK	TYPE STEEL	PCS	DIA	LENGTH	WEB WT MK	TYPE STEEL	PCS	DIA	LENGTH
	C32T?D 595	9	A242	2" x [illegible] x 2[illegible]	1'-2 [illegible]"	6'-5 [illegible]"	C	A242	1.4	5'-3"	5	A242	[illegible]	2'-4 7/8"	A242	.14	4 [illegible]	A242	1.14	7 [illegible]	—	—	—	4	A242	[illegible]	1.14	2'-10"	-	—	—	-	—

STEEL TRUSS DETAILS

FLOOR TRUSS C32T?D 59'-5" [illegible]

WORLD TRADE CENTER TOWER A-B

7-AB1-4 7-AB[illegible]

DRAWN BY [illegible]

DATE 4-7-69

4/15/69

4-7-69

221

ST207D

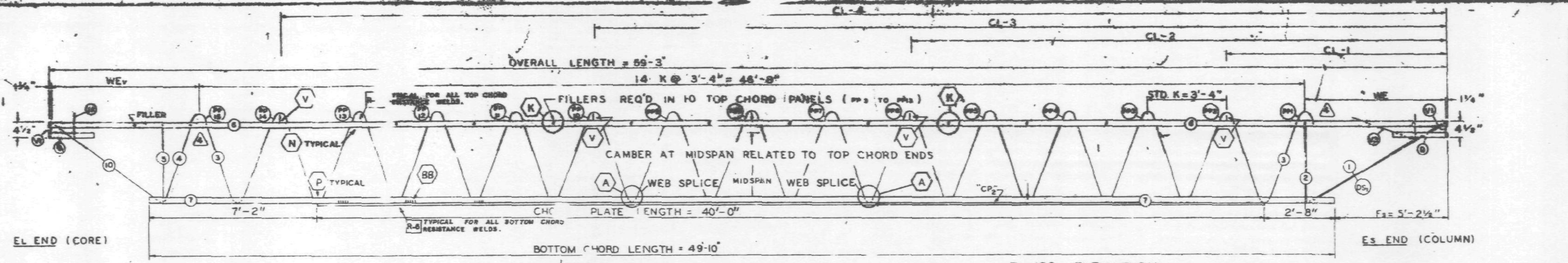

TRUSS ELEVATION

	Fabrication Requirements	
	DESIGN	TOLERANCE
CAMBER AT MIDSPAN	2 1/16"	±-3/8"
DESIGN DEPTH	29"	± 1/4"
PANEL "K"	3'-4"	± 1/4"
OVERALL LENGTH	59'-3"	± 3/8"
WEB DEPTH	31"	± 1/4"

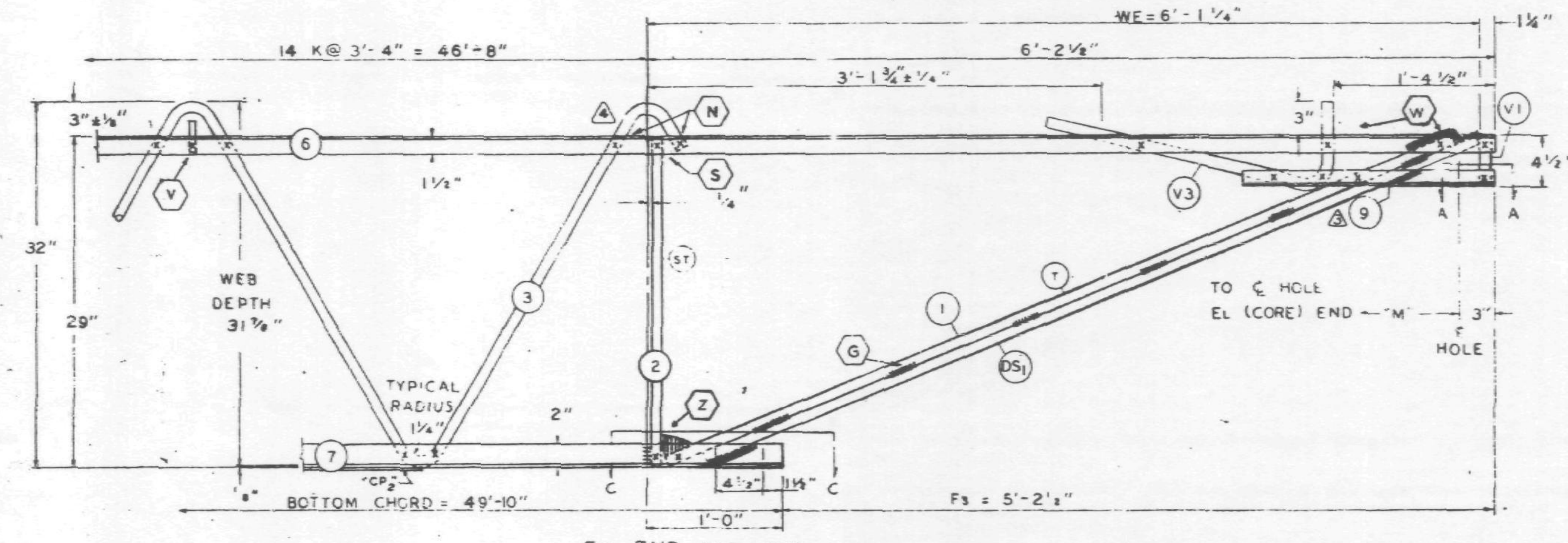

Es END (COLUMN)

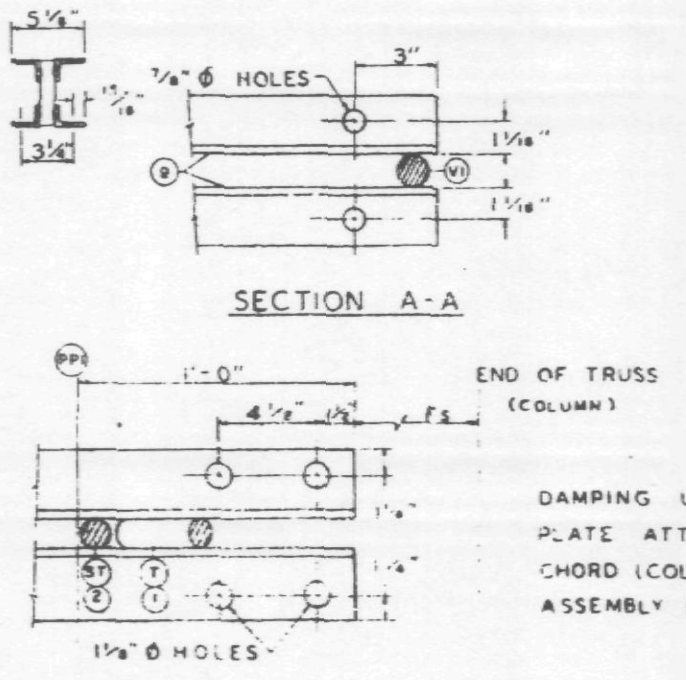

SECTION A-A

SECTION C-C

ALL PANEL POINTS RESISTANCE WELDED (x).
ARC WELDS INDICATED AT SHADED AREAS
AND AT BOTTOM CHORD WEB SPLICES.
ALL WELD DETAILS SHOWN ON SHEETS ST290, ST291, ST292, ST293, AND ST280.

CHORD PLATE DETAILS SHOWN ON SHEET ST280.
SEE SHEET ST295 FOR V1, V2, & V3 DETAILS.
LETTERS IN HEXAGON INDICATE WELD DETAIL, i.e., (A).
LETTERS AND NUMBERS IN SQUARES INDICATE RESISTANCE WELD STRENGTH IDENTIFIED IN THE QUALITY CONTROL PROGRAM, i.e., R-6.

DAMPING UNIT CONNECTION PLATE ATTACHED TO BOTTOM CHORD (COL END) IN FIELD. ASSEMBLY BY CONTRACT WTC 223.00.

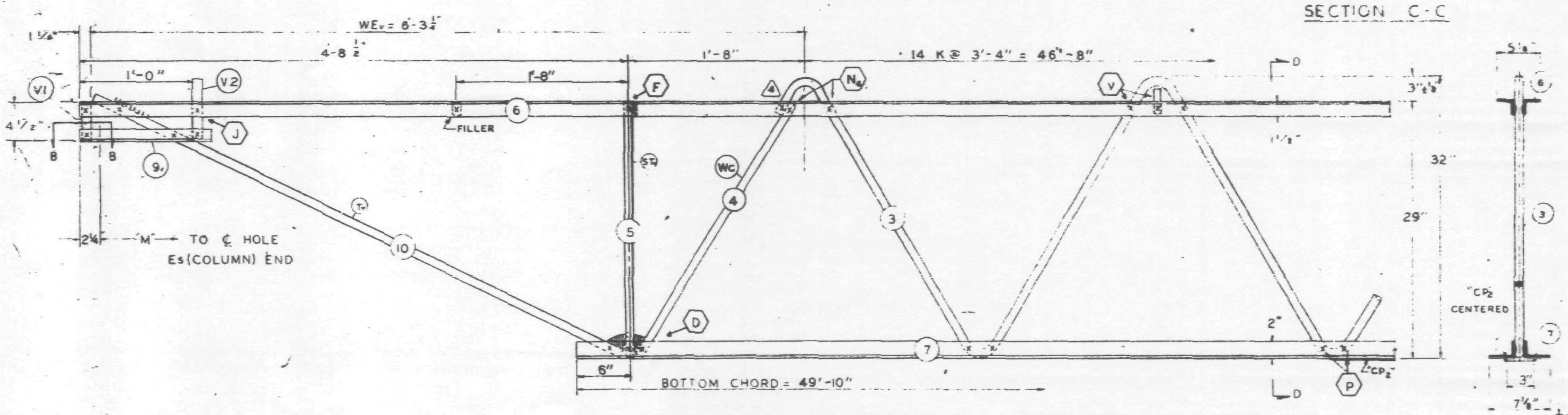

EL END (CORE)

SEC. D-D

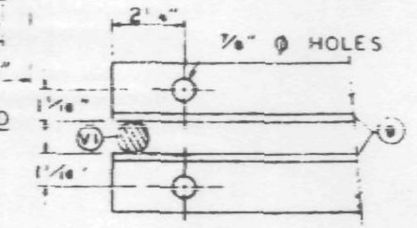

SECTION B-B

NO.	DATE	REVISION	BY
4	12-9-68	AS NOTED	G.D.C.
3	7-22-68	MK. (9) LENGTH	T.M.C.
2	6-22-68	GENERAL	T.M.C.
1	5-27-68	CHORD PLATE, WELD, T DIAGONAL	T.M.C.

(4) REF. DRWGS

7-AB1-4	7-22-68
7-AB1-52	2-15-68
7-AB1-53	7-22-68
7-AB4-50	8-1-68
7-AB3-2	1-3-68
7-AB4-50.5	10-20-67

PAINT
LACLEDE ELECTROCOAT
RED NO. 10001

TRUSS DESIGNATION	TOP CHORD TWO ANGLES				BOTTOM CHORD TWO ANGLES				MAIN WEB "W"					FILLER		"M" C-C HOLE	CONNECTION FILLERS			CHORD PLATE			
	MK.	TYPE STEEL	CHORD SIZE	LENGTH	MK.	TYPE STEEL	CHORD SIZE	LENGTH	MK.	TYPE STEEL	DIA.	LENGTH (4)	NO. OF K	NO	DIA.		NO.	DIA.	LENGTH	MK.	TYPE STEEL	SIZE	LENGTH
C32T7E-593	6	A242	2"x1 1/2"x.31	59'-3"	7	A36	3"x2"x.33	49'-10"	3	A36	1.09	88'-1 1/4"	14 @ 3'-4" = 46'-8"	11	1.09	58'-9 3/4"	4	1.09	3"	CP2	A36	1/4x3	40'-0"

COLUMN END

Es END	TRUSS DESIGNATION	BEARING ANGLES				WE	DIAGONAL "T" STRUT				VERTICAL "ST" STRUT				END STIFFENER MK. V1			END STIFFENER MK. V3			DOUBLE STRUT			
		MK	TYPE STEEL	CHORD SIZE	LENGTH (3)		MK	TYPE STEEL	DIA	LENGTH	MK	TYPE STEEL	DIA	LENGTH (4)	TYPE STEEL	DIA	LENGTH	TYPE STEEL	DIA	LENGTH	MK	TYPE STEEL	DIA	LENGTH
	C32T7E-593	9	A242	2"x1 1/2"x.25	2'-3"	6'-1 1/4"	1	A36	1.09	6'-3 1/8"	2	A36	1.09	2'-4 7/8"	A36	1.09	4 3/8"	A36	1.09	2'-9 1/2"	DS1	A242	.92	6'-3 1/8"

CHECK DIMENSION FOR TRUSS FAB

LOCATION OF TRANS. TRUSS				
CL-1	CL-2	CL-3	CL-4	Fs
9'-6 1/2"	22'-10 1/2"	36'-2 1/2"	49'-6 1/2"	5'-2 1/2"

CORE END

EL END	TRUSS DESIGNATION	BEARING ANGLES				WEv	DIAGONAL "Tv" STRUT				VERTICAL "STv" STRUT				END STIFFENER MK. V1			END STIFFENER MK. V2			END STIFFENER MK. V4			WEB "Wc"					WEB "WT"				
		MK	TYPE STEEL	CHORD SIZE	LENGTH		MK	TYPE STEEL	DIA	LENGTH	MK	TYPE STEEL	DIA.	LENGTH (4)	TYPE STEEL	DIA.	LENGTH	TYPE STEEL	DIA.	LENGTH	TYPE STEEL	DIA.	LENGTH	MK	TYPE STEEL	PCS	DIA	LENGTH (4)	MK	TYPE STEEL	PCS	DIA.	LENGTH
	C32T7E-593	9v	A242	2"x1 1/2"x.25	1'-2"	6'-3 1/4"	10	A242	1.14	5'-1"	5	A242	1.14	2'-4 7/8"	A242	1.14	4 1/8"	A242	1.14	7 1/8"	—	—	—	4	A242	1	1.14	2'-10"	-	—	—	—	—

STEEL TRUSS DETAILS
FOR
WORLD TRADE CENTER N.Y.C.
FOR
THE PORT OF NEW YORK AUTHORITY

FLOOR TRUSS C32T7E 59'-3" OVERALL
WORLD TRADE CENTER TOWER A-B

FABRICATION BY LACLEDE STEEL COMPANY

FABRICATED AT MADISON, ILLINOIS	DESIGN DRAWING NO. 7-AB1-4 7-AB3-2 PLATE	
APPROVED FOR FABRICATION BY James White FOR PONYA, DATE 12/12/68	DRAWN BY [signature] DATE APR. 18, 1968	
APPROVED FOR FABRICATION BY LACLEDE STEEL CO. FOR FABRICATOR, DATE	CHECKED BY T.M. CHURA DATE APR. 18, 1968	IN CHARGE OF PROD. DEV.
DETAILED BY A.C. WEBER	FABRICATION CONT. NO. WTC 221	SHEET NO. ST207E

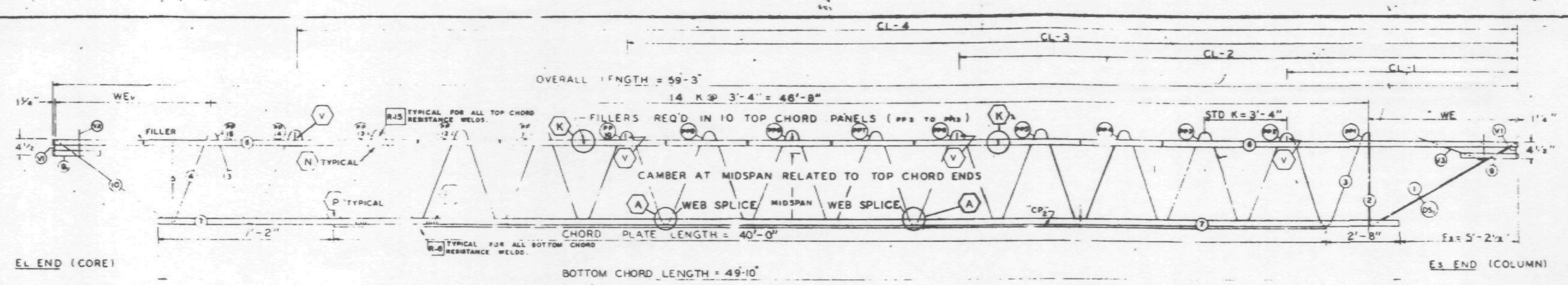

TRUSS ELEVATION

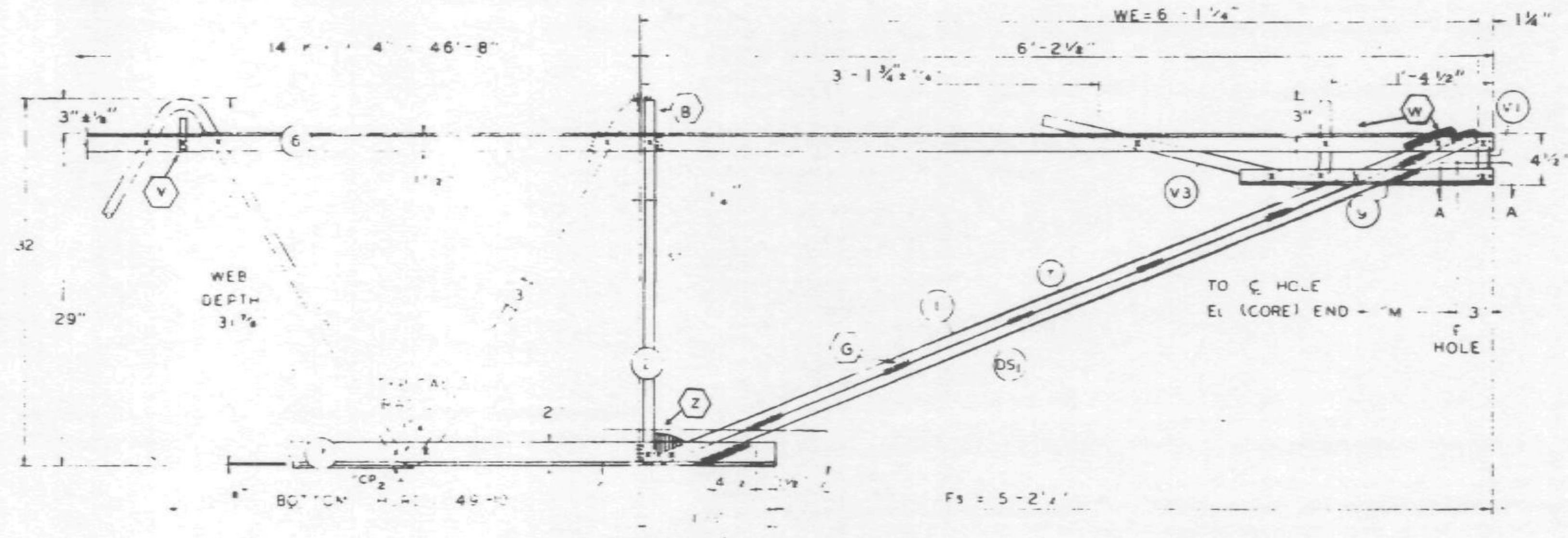

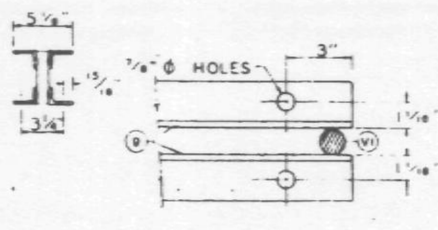

SECTION A-A

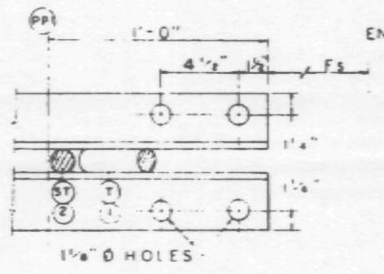

SECTION C-C

END OF TRUSS (COLUMN)

DAMPING UNIT CONNECTION PLATE ATTACHED TO BOTTOM CHORD (COL END) IN FIELD ASSEMBLY BY CONTRACT WTC 223.00.

ALL PANEL POINTS RESISTANCE WELDED.
ARC WELDS INDICATED AT SHADED AREAS AND AT BOTTOM CHORD WEB SPLICES.
ALL WELD DETAILS SHOWN ON SHEETS ST290, ST291, ST292, AND ST280.

CHORD PLATE DETAILS SHOWN ON SHEET ST280.
SEE SHEET ST295 FOR V1, V2, & V3 DETAILS.
LETTERS IN HEXAGON INDICATE WELD DETAIL, i.e., A.
LETTERS AND NUMBERS IN SQUARES INDICATE RESISTANCE WELD STRENGTH IDENTIFIED IN THE QUALITY CONTROL PROGRAM, i.e., R-6.

FABRICATION REQUIREMENTS	DESIGN	TOLERANCE
CAMBER AT MIDSPAN	2 1/16"	± 3/8"
DESIGN DEPTH	29"	± 1/4"
PANEL "K"	3'-4"	± 1/4"
OVERALL LENGTH	59'-3"	± 5/8"
WEB DEPTH	31 7/8"	± 1/4"

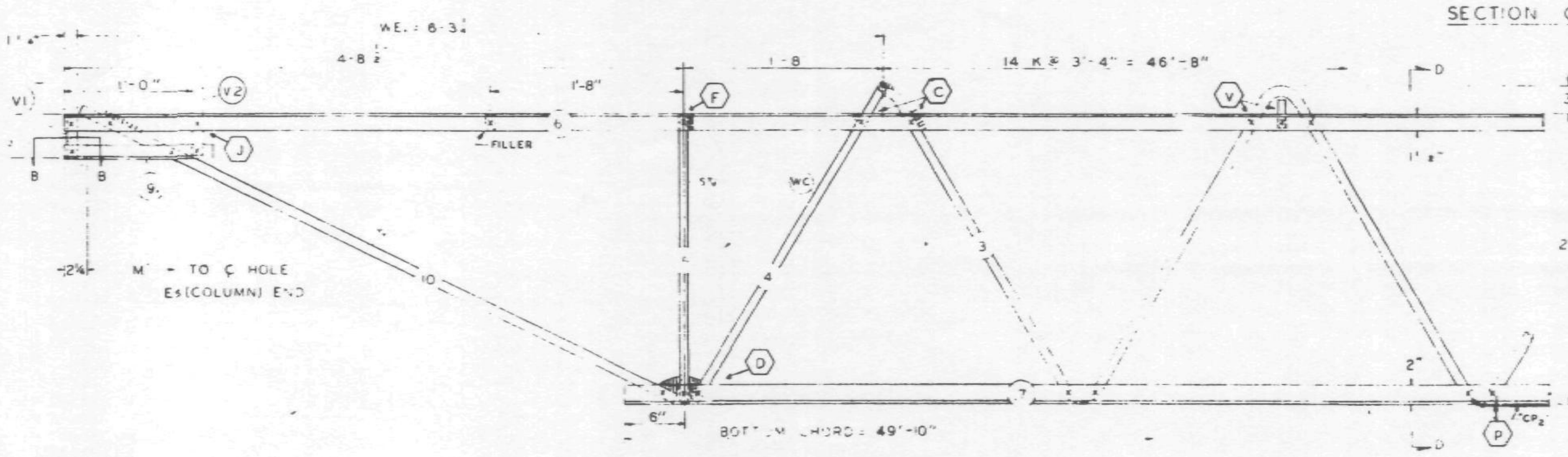

EL END (CORE)

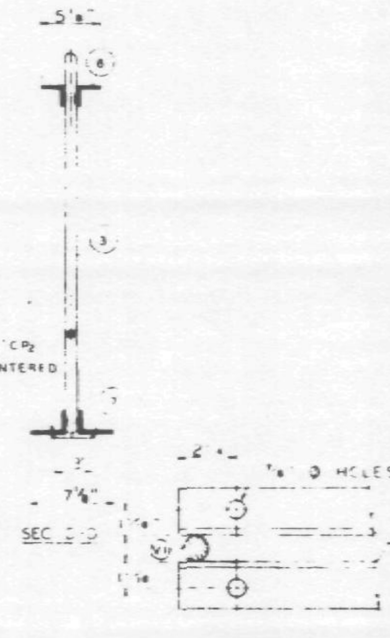

SECTION B-B

NO.	DATE	REVISION	BY
3	7-22-68	MK (9)	T.M.C.
2	6-22-68	GENERAL	T.M.C.
1	5-27-68	CHORD PLATE, WELD, T DIAGONAL	T.M.C.

REF DRWGS

7-AB1-4	4-5-68
7-AB1-52	2-15-68
7-AB1-53	4-1-68
7-AB4-50 & 50 2	10-20-67
7-AB3-2	1-3-68
7-AB4-50 5	10-20-67

PAINT
LACLEDE ELECTROCOAT
REG NO 1000

TRUSS DESIGNATION	TOP CHORD TWO ANGLES MK	TYPE STEEL	CHORD SIZE	LENGTH	BOTTOM CHORD TWO ANGLES MK	TYPE STEEL	CHORD SIZE	LENGTH	MAIN WEB "W" MK	TYPE STEEL	DIA	LENGTH	NO OF K	FILLER NO	DIA	"M" ℄-℄ HOLE	CONNECTION FILLERS NO.	DIA	LENGTH	CHORD PLATE MK	TYPE STEEL	SIZE	LENGTH
C32T7E-593	6	A242	2"x1½"x.3	59'-3"	7	A36	3"x2"x.33	49'-10"	3	A36	1.09	87'-2½"	14 @ 3'-4" = 46'-8"	11	1.09	58-9¾	4	1.09	3"	CP_2	A36	¼x3	40'-0"

COLUMN END

Es END TRUSS DESIGNATION	BEARING ANGLES MK	TYPE STEEL	CHORD SIZE	LENGTH (3)	WE	DIAGONAL "T" STRUT MK	TYPE STEEL	DIA	LENGTH	VERTICAL "ST" STRUT MK	TYPE STEEL	DIA	LENGTH	END STIFFENER MK V1 TYPE STEEL	DIA	LENGTH	MK V3 TYPE STEEL	DIA	LENGTH	DOUBLE STRUT MK	TYPE STEEL	DIA	LENGTH
C32T7E-593	9	A242	2"x1½"x.25	2'-3"	6'-1¼"		A36	1.09	6'-3⅞" (1)	2	A36	1.09	2'-7⅞"	A36	1.09	4⅜"	A36	1.09	2'-9½"	DS_1	A242	.92	6'-3⅞" (1)

CHECK DIMENSION FOR TRUSS FAB
LOCATION OF TRANS TRUSS

CL-1	CL-2	CL-3	CL-4	Fs
9'-6½"	22'-10½"	36'-2½"	49'-6½"	5'-2½"

CORE END

EL END TRUSS DESIGNATION	BEARING ANGLES MK	TYPE STEEL	CHORD SIZE	LENGTH	WE	DIAGONAL "T" STRUT MK	TYPE STEEL	DIA	LENGTH	VERTICAL "ST" STRUT MK	TYPE STEEL	DIA	LENGTH	END STIFFENER MK V1 TYPE STEEL	DIA	LENGTH	MK V2 TYPE STEEL	DIA	LENGTH	MK V4 TYPE STEEL	DIA	LENGTH	WEB "Wc" MK	TYPE STEEL	PCS	DIA	LENGTH	WEB "WT" MK	TYPE STEEL	PCS	DIA	LENGTH
C32T7E-593	9	A242	2"x1½"x.25	1'-2"	6'-3¼	0	A242	1.14	5'-1"	5	A242	1.14	2'-4¾"	A242	1.14	4½	A242	1.14	7½	—	—	—	4	A242	1	1.14	3'-0½"	-	—	—	—	—

STEEL TRUSS DETAILS

FLOOR TRUSS C32T7E 59'-3" OVERALL
WORLD TRADE CENTER TOWER A-B

7-AB1-4 7-AB3-2 PLATE
3/4/68
APR. 18, 1968
T.M. CHURA
APR 18, 1968
DETAILED BY
221
ST207E

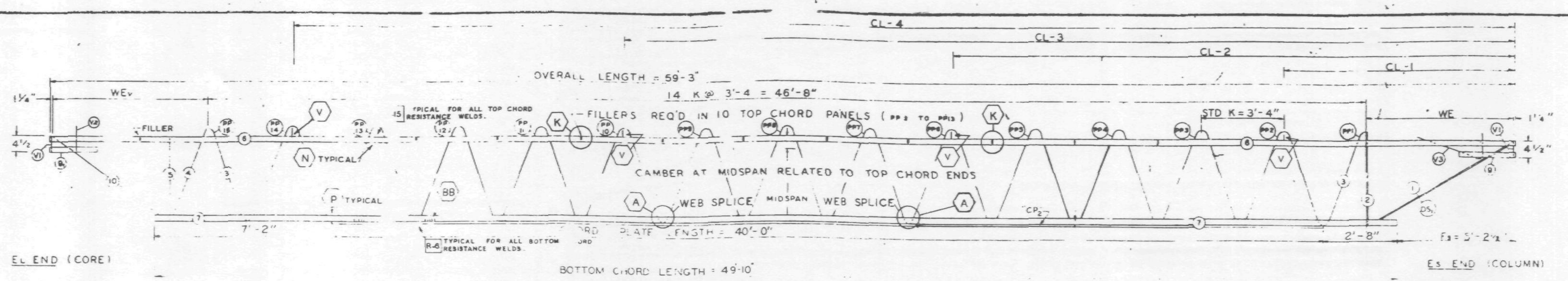

TRUSS ELEVATION

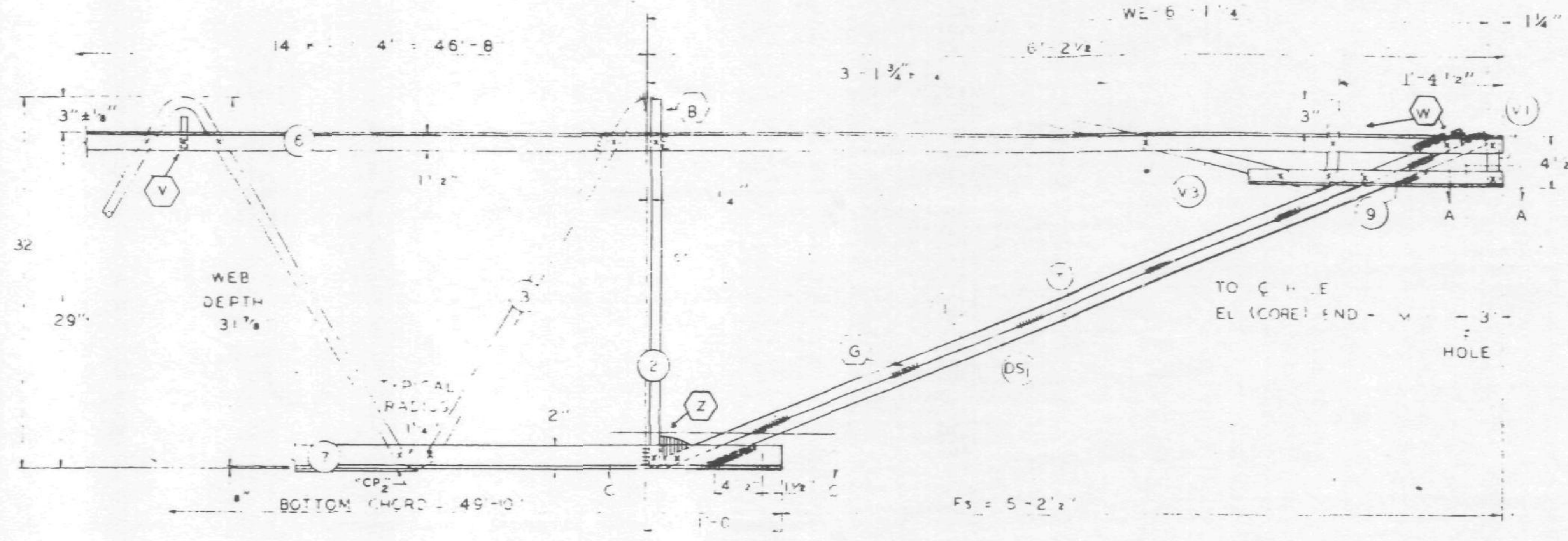

Es END (COLUMN)

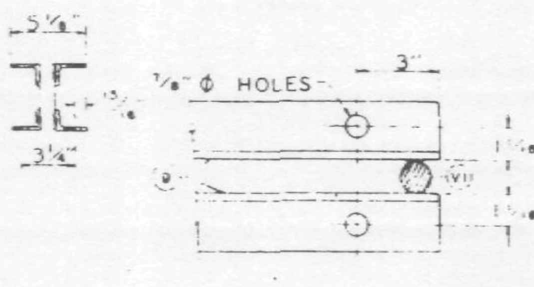

SECTION A-A

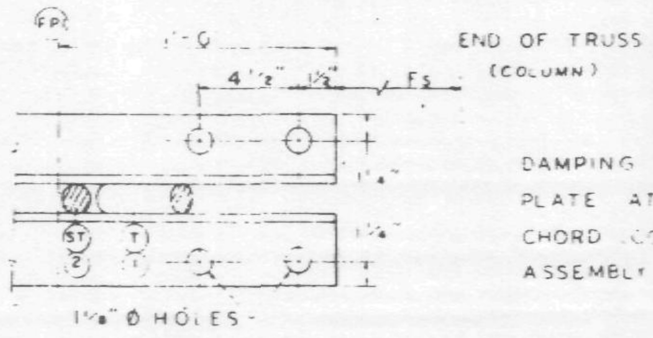

SECTION C-C

ALL PANEL POINTS RESISTANCE WELDED ...
ARC WELDS INDICATED AT SHADED AREAS
AND AT BOTTOM CHORD WEB SPLICES
ALL WELD DETAILS SHOWN ON SHEETS ST290, ST291, ST292,
AND ST280.

CHORD PLATE DETAILS SHOWN ON SHEET ST280.
SEE SHEET ST295 FOR V1, V2, & V3 DETAILS.
LETTERS IN HEXAGON INDICATE WELD DETAIL, ie., A.
LETTERS AND NUMBERS IN SQUARES INDICATE RESISTANCE WELD STRENGTH IDENTIFIED IN THE QUALITY CONTROL PROGRAM, ie., R-6.

DAMPING UNIT CONNECTION PLATE ATTACHED TO BOTTOM CHORD (COL END) IN FIELD ASSEMBLY BY CONTRACT WTC 223.00.

FABRICATION REQUIRMENTS

	DESIGN	TOLERANCE
CAMBER AT MIDSPAN	2 1/16"	± 3/8"
DESIGN DEPTH	29"	± 1/4"
PANEL "K"	3'-4"	± 1/4"
OVERALL LENGTH	59'-3"	± 3/8"
WEB DEPTH	[illegible] 7/8"	± 1/4"

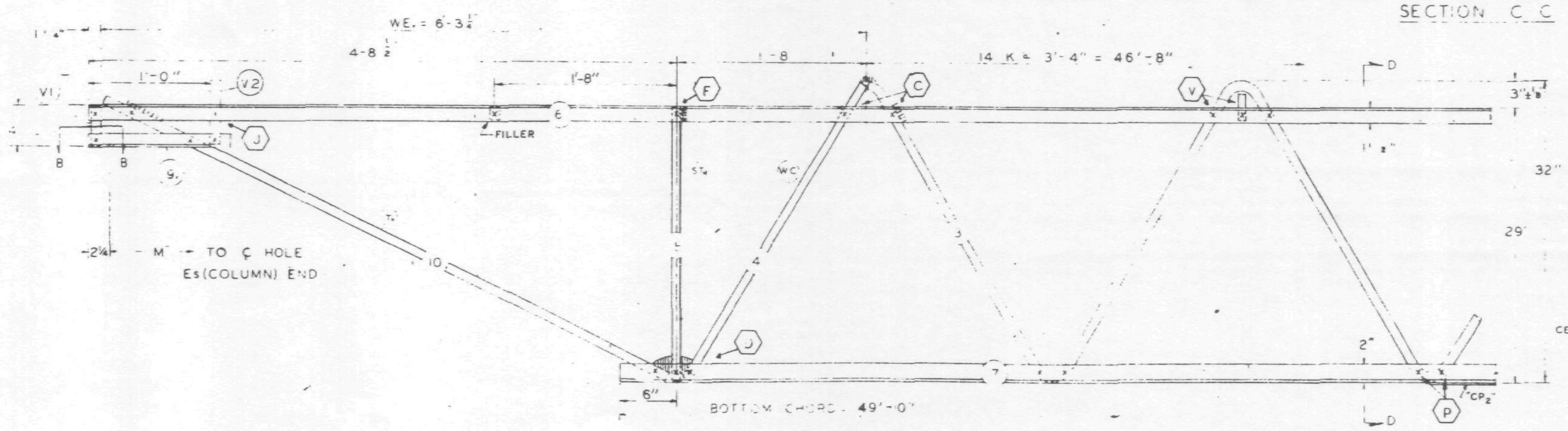

EL END (CORE)

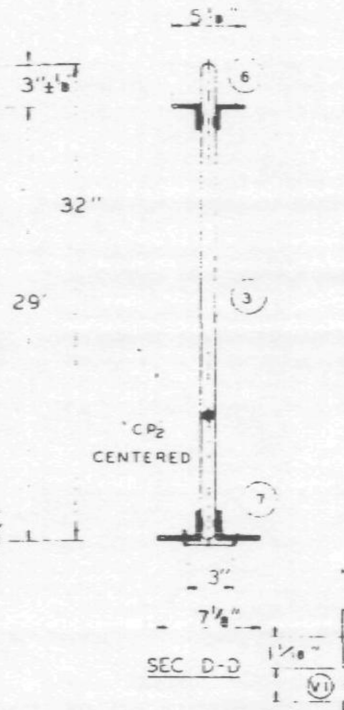

SEC D-D

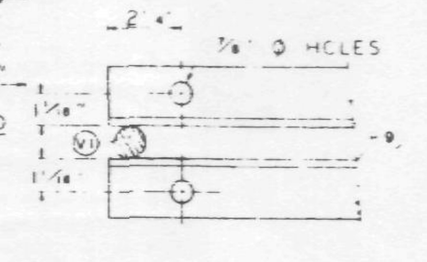

SECTION B-B

NO.	DATE	REVISION	BY
2	6-22-68	GENERAL	T.M.C.
1	5-27-68	CHORD PLATE, WELD, T DIAGONAL	T.M.C.

REF DRWGS

7-AB1-4	4-15-68
7-AB1-57	2-15-68
7-AB1-53	4-1-68
7-AB4-50 & 50.2	10-20-67
7-AB3-2	[illegible]-68
7-AB4-50.5	10-20-67

PAINT
LACLEDE ELECTROCOAT
RED NO. 1050

TRUSS DESIGNATION	TOP CHORD TWO ANGLES				BOTTOM CHORD TWO ANGLES				MAIN WEB "W"					FILLER		"M" ℄ HOLE	CONNECTION FILLERS			CHORD PLATE			
	MK	TYPE STEEL	CHORD SIZE	LENGTH	MK	TYPE STEEL	CHORD SIZE	LENGTH	MK	TYPE STEEL	DIA	LENGTH	NO OF K	NO	DIA		NO.	DIA.	LENGTH	MK	TYPE STEEL	SIZE	LENGTH
C32T7E-593	6	A242	2"x1½"x 31	59'-3"	7	A36	3"x2"x 33	49'-10"	3	A36	1.09	87'-2½"	14 @ 3'-4" = 46'-8"	11	1.09	58'-9¾"	4	1.09	3"	CP2	A36	¼x3	40'-0"

COLUMN END

Es END	TRUSS DESIGNATION	BEARING ANGLES				WE	DIAGONAL "T" STRUT				VERTICAL "ST" STRUT				END STIFFENER MK. V1			END STIFFENER MK. V3			DOUBLE STRUT			
		MK	TYPE STEEL	CHORD SIZE	LENGTH		MK	TYPE STEEL	DIA	LENGTH	MK	TYPE STEEL	DIA	LENGTH	TYPE STEEL	DIA	LENGTH	TYPE STEEL	DIA	LENGTH	MK	TYPE STEEL	DIA	LENGTH
	C32T7E-593	9	A242	2"x1½"x 25	2'-0"	6'-1¼"		A36	1.09	6'-3⅛"	2	A36	1.09	2'-7⅞"	A36	1.09	4⅜"	A36	1.09	2'-9½"	DS1	A242	.92	6'-3⅛"

CORE END

EL END	TRUSS DESIGNATION	BEARING ANGLES				WE	DIAGONAL "T" STRUT				VERTICAL "ST" STRUT				END STIFFENER MK. V1			MK. V2			MK. V4			WEB "WC"					WEB "WT"				
		MK	TYPE STEEL	CHORD SIZE	LENGTH		MK	TYPE STEEL	DIA	LENGTH	MK	TYPE STEEL	DIA.	LENGTH	TYPE STEEL	DIA.	LENGTH	TYPE STEEL	DIA.	LENGTH	TYPE STEEL	DIA.	LENGTH	MK	TYPE STEEL	PCS	DIA	LENGTH	MK	TYPE STEEL	PCS	DIA.	LENGTH
	C32T7E-593	9	A242	2"x1½"x 25	1'-2"	6'-3¾"	10	A242	1.14	5'-1"	5	A242	1.14	2'-4¾"	A242	1.14	4⅞"	A242	1.14	7⅞"	—	—	—	4	A242	1	1.14	3'-0½"	-	—	—	—	—

CHECK DIMENSION FOR TRUSS FAB LOCATION OF TRANS. TRUSS

CL-1	CL-2	CL-3	CL-4	Fs
9'-6½"	22'-10½"	36'-2½"	49'-6½"	5'-2½"

STEEL TRUSS DETAILS

PORT OF NEW YORK AUTHORITY

FLOOR TRUSS C32T7E | 59'-3" OVERALL

WORLD TRADE CENTER TOWER A-B

FABRICATION BY ... STEEL COMPANY

DRAWING NO.: 7-AB1-4, 7-AB3-2

APPROVED FOR FABRICATION BY JW, 4/29/68

DRAWN BY [signature] DATE APR. 18, 1968

CHECKED BY T.M. CHURA DATE APR. 18, 1968

DETAILED BY A.C. WEBER

CONTRACT NO. 221

SHEET NO. ST207E

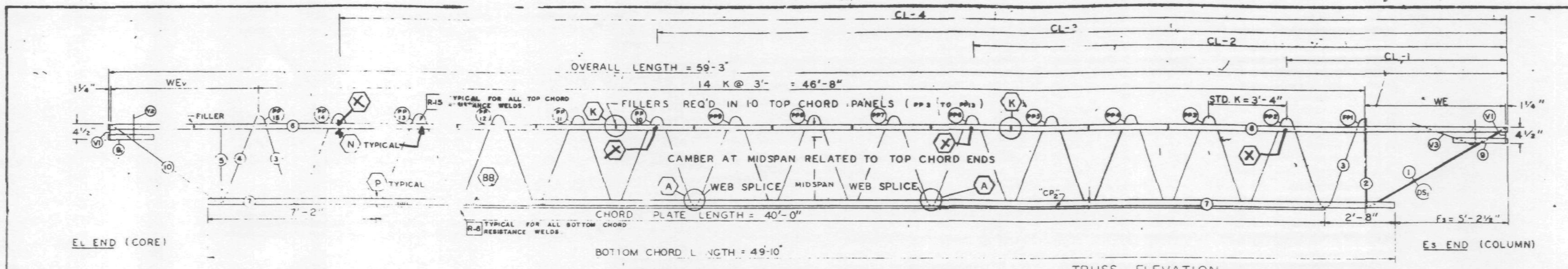

TRUSS ELEVATION

FABRICATION REQUIRMENTS	DESIGN	TOLERANCE
CAMBER AT MIDSPAN	1"	± 3/8"
DESIGN DEPTH	29"	± 1/4"
PANEL "K"	3'-4"	± 1/4"
OVERALL LENGTH	59'-3"	± 3/8"
WEB DEPTH	31 7/8"	± 1/4"

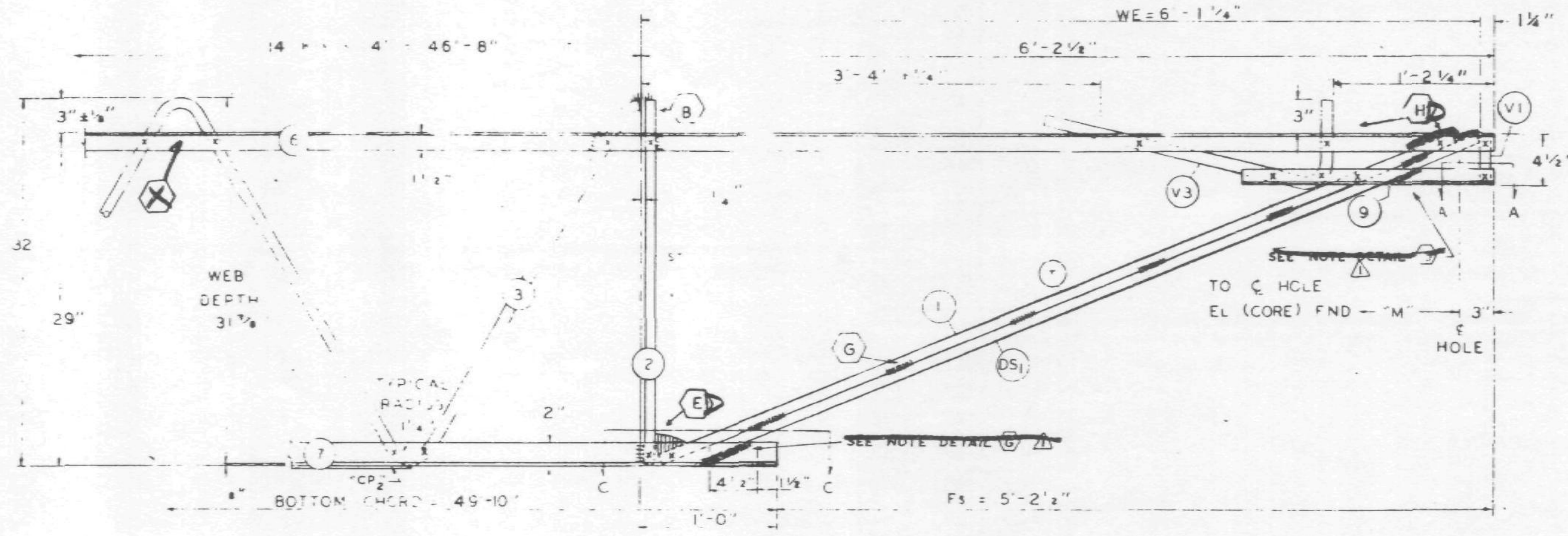

Es END (COLUMN)

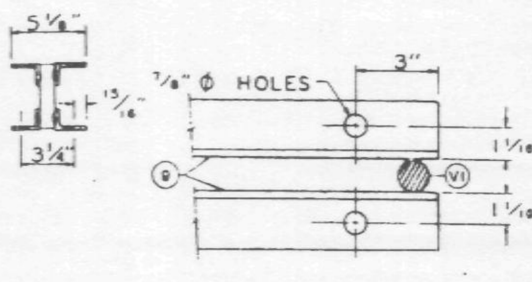

SECTION A-A

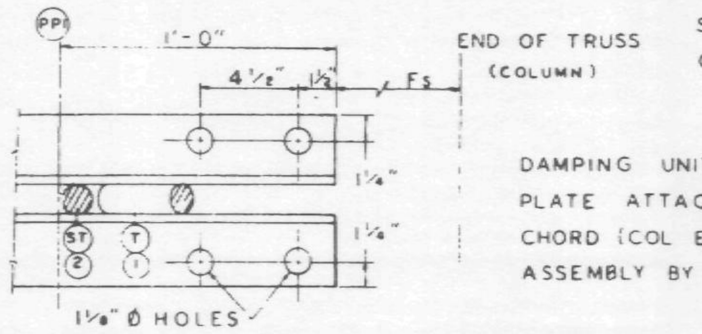

SECTION C-C

ALL PANEL POINTS RESISTANCE WELDED (x).
ARC WELDS INDICATED AT SHADED AREAS AND AT BOTTOM CHORD WEB SPLICES.
ALL WELD DETAILS SHOWN ON SHEETS ST290, ST291, AND ST280.

CHORD PLATE DETAILS SHOWN ON SHEET ST280.
SEE SHEET ST295 FOR V1, V2, & V3 DETAILS.
LETTERS IN HEXAGON INDICATE WELD DETAIL, ie. (A).
LETTERS AND NUMBERS IN SQUARES INDICATE RESISTANCE WELD STRENGTH IDENTIFIED IN THE QUALITY CONTROL PROGRAM, ie. R-6.

DAMPING UNIT CONNECTION PLATE ATTACHED TO BOTTOM CHORD (COL END) IN FIELD. ASSEMBLY BY CONTRACT WTC 223.00.

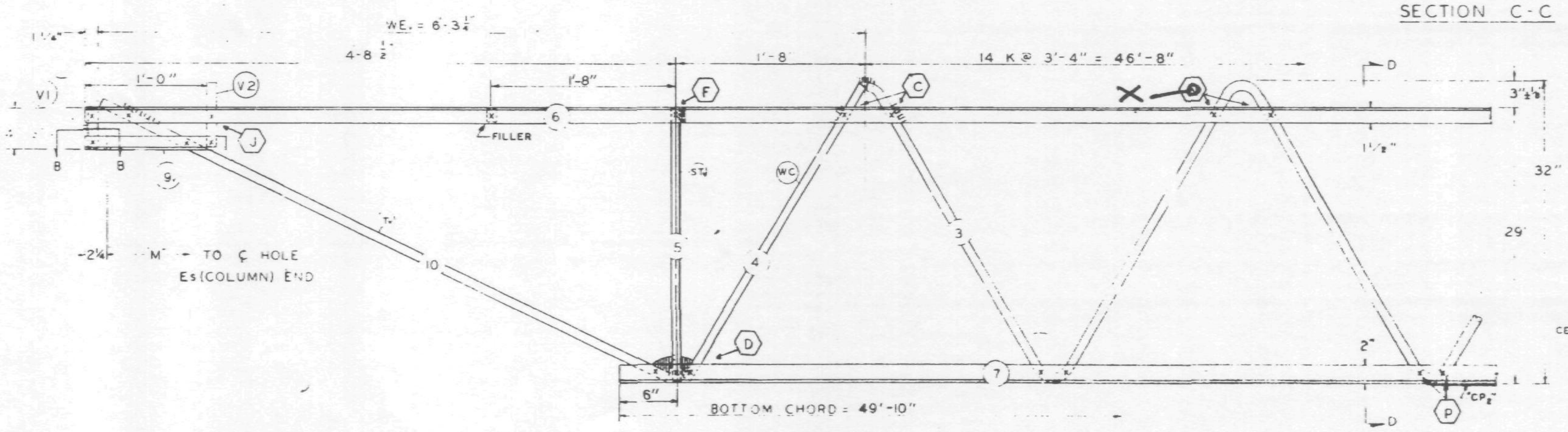

EL END (CORE)

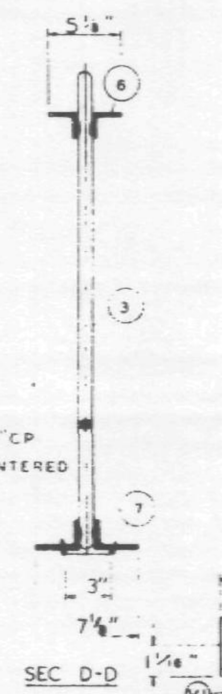

SEC D-D

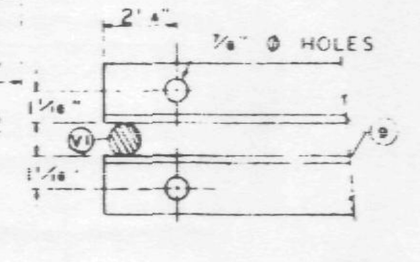

SECTION B-B

6/13/68 WAB

NO.	DATE	REVISION	BY
1	5-27-68	CHORD PLATE, WELD, T DIAGONAL	T.M.C.

REF DRWGS

7-AB1-4	4-5-68
7-AB1-52	2-15-68
7-AB1-53	4-1-68
7-AB4-50 & 50.2	10-20-67
7-AB3-2	1-3-68
7-AB4-50.5	10-20-67

PAINT
LACLEDE ELECTROCOAT
RED NO. 10001

TRUSS DESIGNATION	TOP CHORD TWO ANGLES				BOTTOM CHORD TWO ANGLES				MAIN WEB "W"					FILLER		"M" ℄ HOLE	TRUSS DATA		CHORD PLATE			
	MK	TYPE STEEL	CHORD SIZE	LENGTH	MK	TYPE STEEL	CHORD SIZE	LENGTH	MK	TYPE STEEL	DIA	LENGTH	NO OF K	NO	DIA				MK	TYPE STEEL	SIZE	LENGTH
C32T7E-593	6	A242	2"x1½"x 3	59'-3"	7	A36	3"x2"x 33	49'-10"	3	A36	1.09	87'-2½"	14 @ 3'-4" = 46'-8"	11	1.09	58'-9¾"			CP2	A36	¼x3	40'-0"

COLUMN END

Es END	TRUSS DESIGNATION	BEARING ANGLES				WE	DIAGONAL "T" STRUT				VERTICAL "ST" STRUT				END STIFFENER MK V1			END STIFFENER MK V3			DOUBLE STRUT			
		MK	TYPE STEEL	CHORD SIZE	LENGTH		MK	TYPE STEEL	DIA	LENGTH	MK	TYPE STEEL	DIA	LENGTH	TYPE STEEL	DIA	LENGTH	TYPE STEEL	DIA	LENGTH	MK	TYPE STEEL	DIA	LENGTH
	C32T7E-593	9	A242	2"x1½"x 25	1'-10"	6'-1¼"		A36	1.09	6'-3⅛"	2	A36	1.09	2'-7⅞"	A36	1.09	4⅜"	A36	1.09	2'-9⅛"	DS1	A242	.75	6'-3⅛"

CHECK DIMENSION FOR TRUSS FAB
LOCATION OF TRANS TRUSS

CL-1	CL-2	CL-3	CL-4	Fs
9'-6½"	22'-10½"	36'-2½"	49'-6½"	5'-2½"

CORE END

EL END	TRUSS DESIGNATION	BEARING ANGLES				WE	DIAGONAL "T" STRUT				VERTICAL "ST" STRUT				END STIFFENER MK V1			END STIFFENER V2			MK V4			WEB "WC"					WEB "WT"				
		MK	TYPE STEEL	CHORD SIZE	LENGTH		MK	TYPE STEEL	DIA	LENGTH	MK	TYPE STEEL	DIA	LENGTH	TYPE STEEL	DIA	LENGTH	TYPE STEEL	DIA	LENGTH	TYPE STEEL	DIA	LENGTH	MK	TYPE STEEL	PCS	DIA	LENGTH	MK	TYPE STEEL	PCS	DIA	LENGTH
	C32T7E-593	9	A242	2"x1½"x 25	1'-2"	6'-3¼"	10	A242	1.14	5'-1"	5	A242	1.14	2'-4¾"	A242	1.14	4¼"	A242	1.14	7¼"	—	—	—	4	A242	1	1.14	3'-0½"	-	—	—	—	—

STEEL TRUSS DETAILS
FOR
WORLD TRADE CENTER N.Y.
FOR
THE PORT OF NEW YORK AUTHORITY

FLOOR TRUSS C32T7E 59'-3" OVERALL
WORLD TRADE CENTER TOWER A-B

FABRICATION BY LACLEDE STEEL COMPANY
FABRICATED AT MADISON, ILLINOIS
DESIGN DRAWING NO. 7-AB1-4 7-AB3-2
APPROVED FOR FABRICATION DATE BY FOR PONYA
DRAWN BY [signature] DATE APR. 18, 1968
APPROVED FOR FABRICATION DATE BY FOR FABRICATOR LACLEDE STEEL CO.
CHECKED BY I.M. CHURA DATE APR. 18, 1968
IN CHARGE OF PROJECT
DETAILED BY A.C. WEBER
FABRICATION CONT. NO. WTC 221
SHEET NO. ST207E

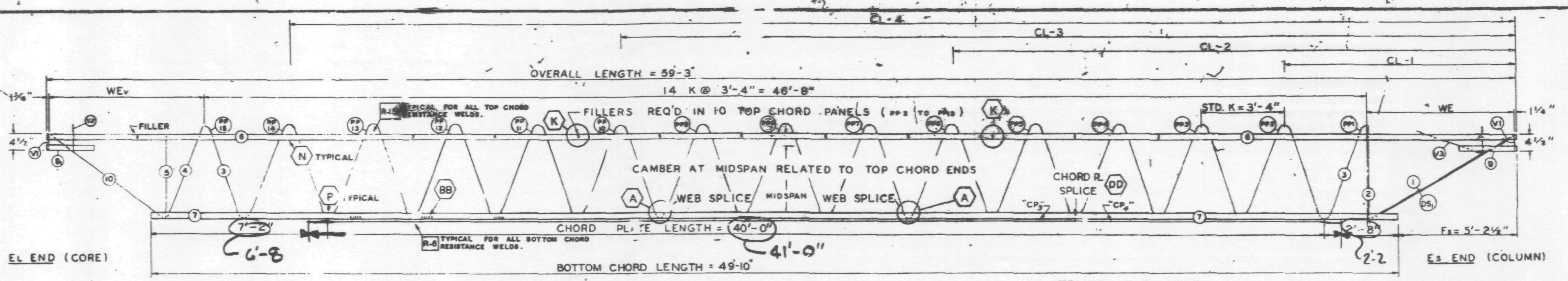

TRUSS ELEVATION

FABRICATION REQUIRMENTS	DESIGN	TOLERANCE
CAMBER AT MIDSPAN	1"	± 3/8"
DESIGN DEPTH	28"	± 1/4"
PANEL "K"	3'-4"	± 1/4"
OVERALL LENGTH	59' 3"	± 3/8"
WEB DEPTH	31 7/8"	± 1 4"

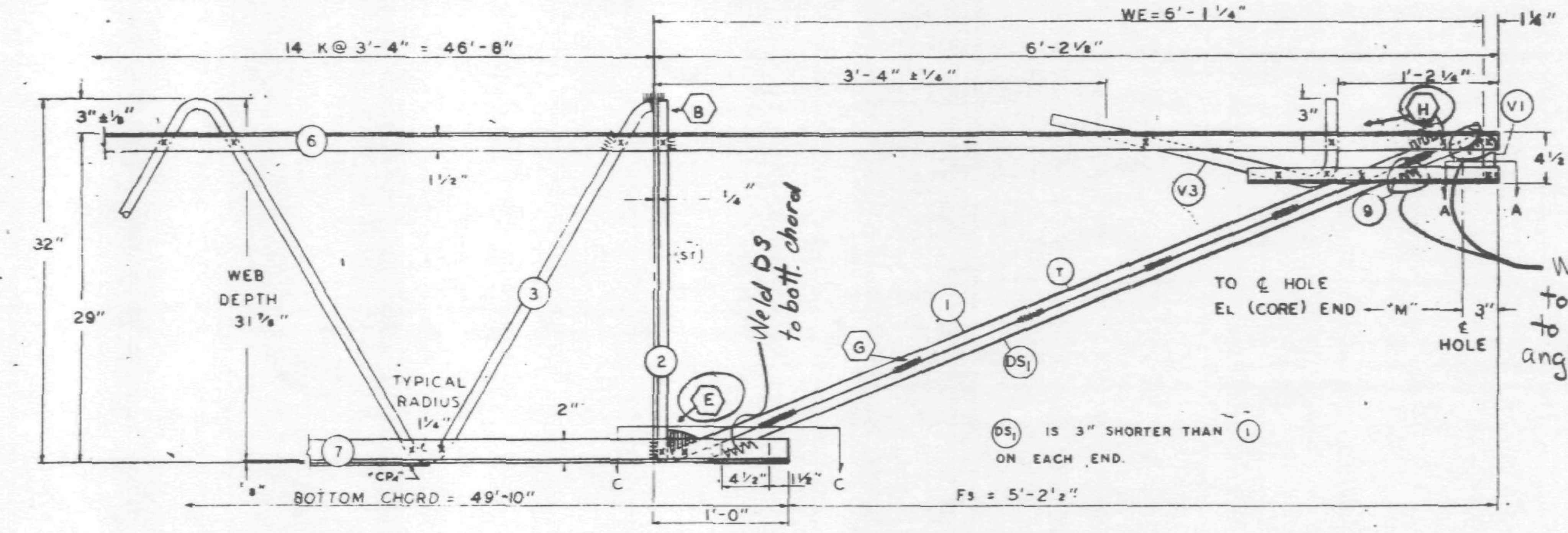

Es END (COLUMN)

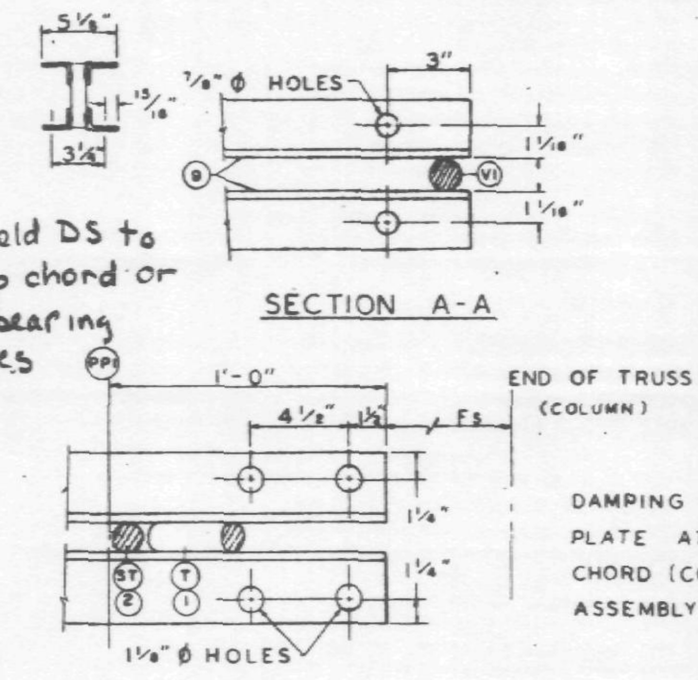

SECTION A-A

SECTION C-C

ALL PANEL POINTS RESISTANCE WELDED (x). ARC WELDS INDICATED AT SHADED AREAS AND AT BOTTOM CHORD WEB SPLICES. ALL WELD DETAILS SHOWN ON SHEETS ST290, ST291, AND ST280.

CHORD PLATE DETAILS SHOWN ON SHEET ST280. SEE SHEET ST295 FOR V1, V2, & V3 DETAILS. LETTERS IN HEXAGON INDICATE WELD DETAIL, ie., (A). LETTERS AND NUMBERS IN SQUARES INDICATE RESISTANCE WELD STRENGTH IDENTIFIED IN THE QUALITY CONTROL PROGRAM, ie., R-6.

DAMPING UNIT CONNECTION PLATE ATTACHED TO BOTTOM CHORD (COL END) IN FIELD. ASSEMBLY BY CONTRACT WTC 223.00.

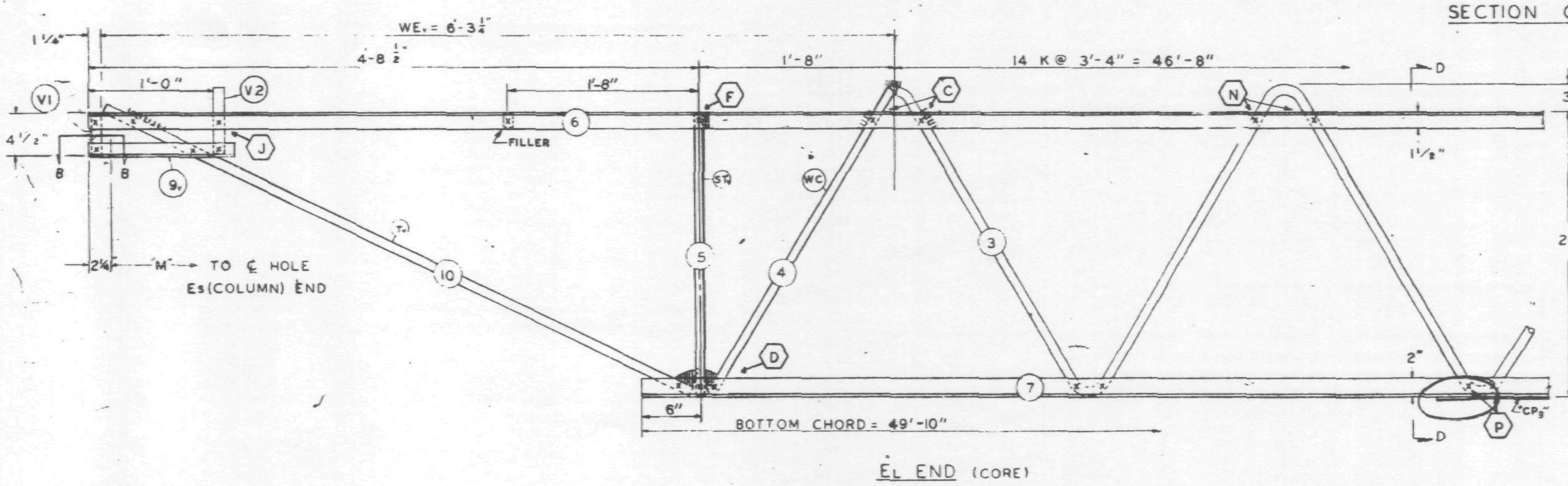

El END (CORE)

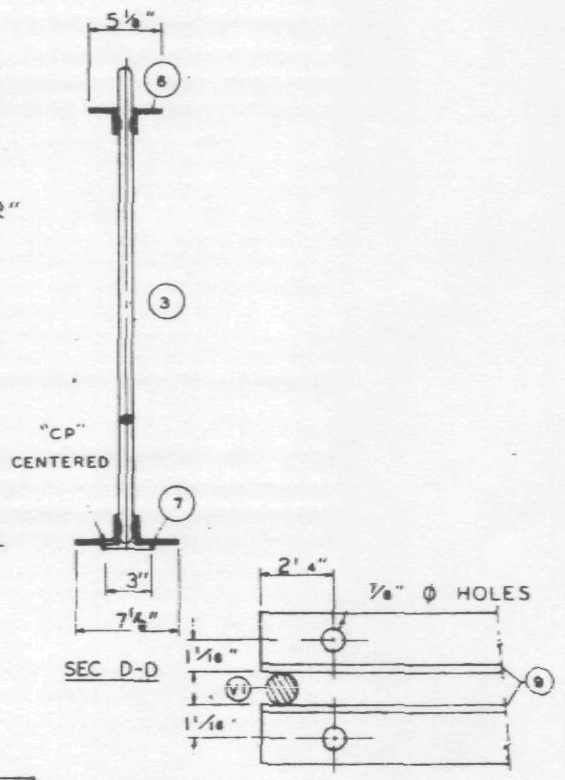

SEC D-D

SECTION B-B

REF DRWGS

7-AB1-4	4-15-68
7-AB1-52	2-15-68
7-AB1-53	4-1-68
7-AB4-50 & 50.2	10-20-67
7-AB3-2	1-3-68
7-AB4-50.5	10-20-67

PAINT
LACLEDE ELECTROCOAT
RED NO. 10001

TRUSS DESIGNATION	TOP CHORD TWO ANGLES				BOTTOM CHORD TWO ANGLES				MAIN WEB "W"					FILLER		"M" C/C HOLE	TRUSS DATA		CHORD PLATE				CHORD PLATE			
	MK.	TYPE STEEL	CHORD SIZE	LENGTH	MK	TYPE STEEL	CHORD SIZE	LENGTH	MK.	TYPE STEEL	DIA.	LENGTH	NO. OF K	NO	DIA.				MK.	TYPE STEEL	SIZE	LENGTH	MK	TYPE STEEL	SIZE	LENGTH
C32T7E-593	6	A242	2"x1½"x.31	59'-3"	7	A36	3"x2"x.33	49'-10"	3	A36	1.09	87'-2½"	14 @ 3'-4" = 46'-8"	11	1.09	58'-9¾"			CP3	A36	¼x3	30'-0"	CP4	A36	¼"x3	10'-0"

11'-0"

COLUMN END

Es END TRUSS DESIGNATION	BEARING ANGLES				WE	DIAGONAL "T" STRUT				VERTICAL "ST" STRUT				END STIFFENER MK. V1			END STIFFENER MK. V3			DOUBLE STRUT			
	MK	TYPE STEEL	CHORD SIZE	LENGTH		MK	TYPE STEEL	DIA	LENGTH	MK.	TYPE STEEL	DIA	LENGTH	TYPE STEEL	DIA	LENGTH	TYPE STEEL	DIA	LENGTH	MK	TYPE STEEL	DIA	LENGTH
C32T7E-593	9	A242	2"x1½"x.25	1'-10"	6'-1¼"	1	A36	1.09	6'-5"	2	A36	1.09	2'-7⅞"	A36	1.09	4⅜"	"	1.09	2'-9½"	DS1	A242	.92	5'-11"

CHECK DIMENSION FOR TRUSS FAB. LOCATION OF TRANS. TRUSS				
CL-1	CL-2	CL-3	CL-4	Fs
9'-6½"	22'-10½"	36'-2½"	49'-6½"	5'-2½"

CORE END

El END TRUSS DESIGNATION	BEARING ANGLES				WEv	DIAGONAL "Tv" STRUT				VERTICAL "STv" STRUT				END STIFFENER MK. V1			END STIFFENER MK. V2			END STIFFENER MK. V4			WEB "Wc"					WEB "WT"				
	MK.	TYPE STEEL	CHORD SIZE	LENGTH		MK.	TYPE STEEL	DIA	LENGTH	MK.	TYPE STEEL	DIA.	LENGTH	TYPE STEEL	DIA.	LENGTH	TYPE STEEL	DIA.	LENGTH	TYPE STEEL	DIA.	LENGTH	MK	TYPE STEEL	PCS	DIA	LENGTH	MK.	TYPE STEEL	PCS	DIA.	LENGTH
C32T7E-593	9v	A242	2"x1½"x.25	1'-2"	6'-3¼"	10	A242	1.14	5'-1"	5	A242	1.14	2'-4¾"	A242	1.14	4½"	A242	1.14	7"	—	—	—	4	A242	1	1.14	3'-0½"	-	—	—	—	—

4/26/68 SK

STEEL TRUSS DETAILS
FOR
WORLD TRADE CENTER N.Y.C.
FOR
THE PORT OF NEW YORK AUTHORITY

FLOOR TRUSS C32T7E 59'-3" OVERALL
WORLD TRADE CENTER TOWER A-B

FABRICATION BY LACLEDE STEEL COMPANY

FABRICATED AT MADISON, ILLINOIS	DESIGN DRAWING NO 7-AB1-4 7-AB3-2	PLATE
APPROVED FOR FABRICATION BY FOR PONYA / DATE	DRAWN BY [signature] DATE APR. 18, 1968	
APPROVED FOR FABRICATION BY FOR FABRICATOR / DATE	CHECKED BY T.M. CHURA DATE APR. 18, 1968	IN CHARGE OF PROD DEV
DETAILED LACLEDE STEEL CO. R.C. WEBER	FABRICATION CONT NO WTC 221	SHEET NO ST207E

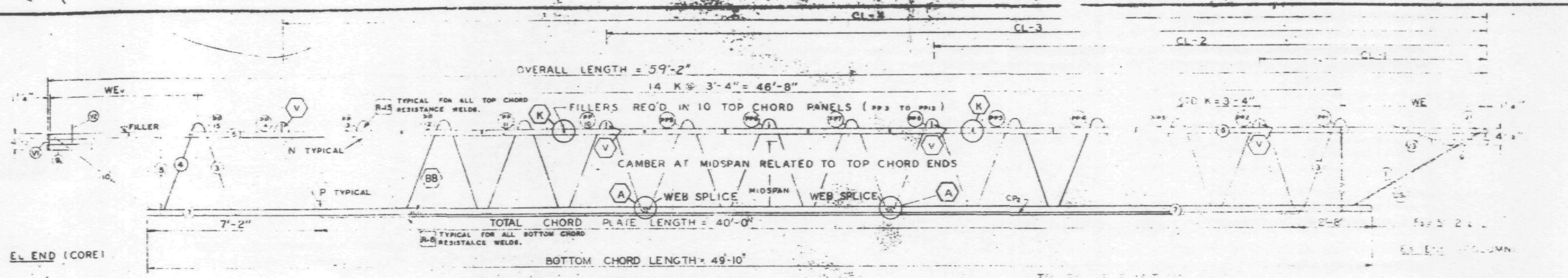

FABRICATION REQUIRMENTS	DESIGN	TOLERANCE
CAMBER AT MIDSPAN	2 1/16"	± 3/8"
DESIGN DEPTH	29"	± 1/4"
PANEL "K"	3'-4"	± 1/4"
OVERALL LENGTH	59'-2"	± 3/8"
WEB DEPTH	31 7/8"	± 1/4"

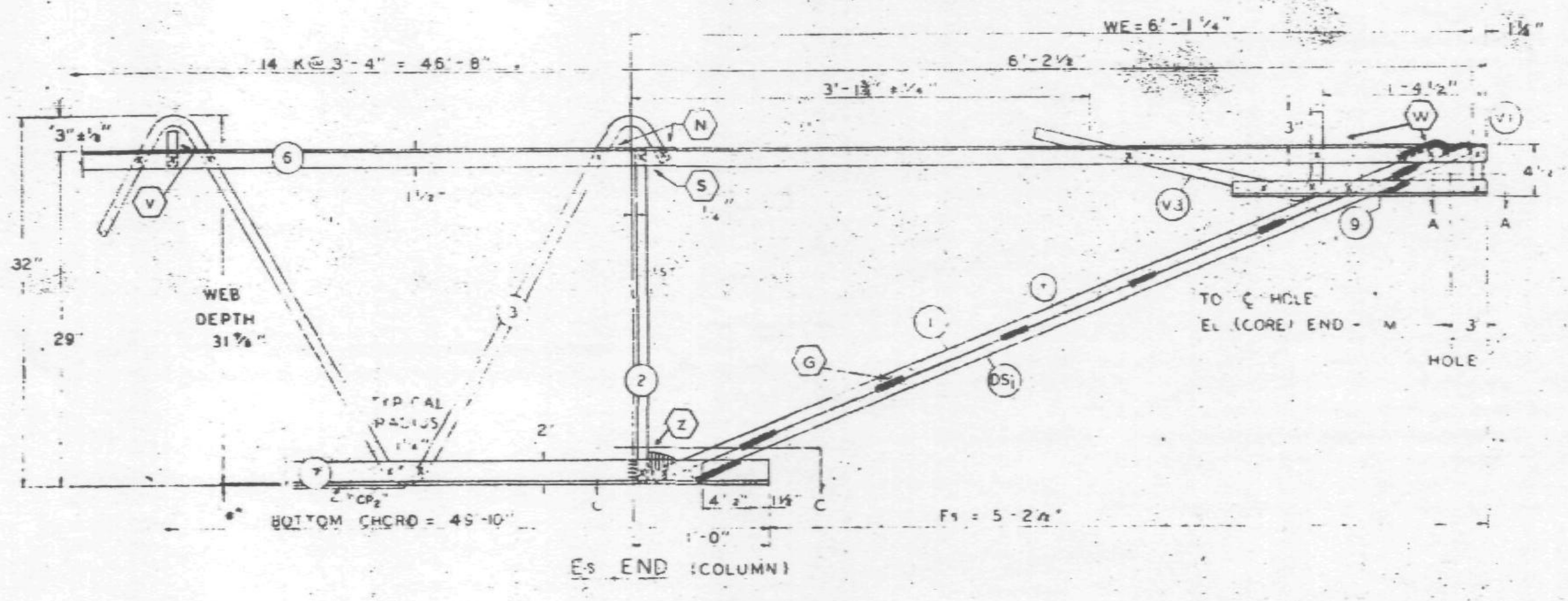

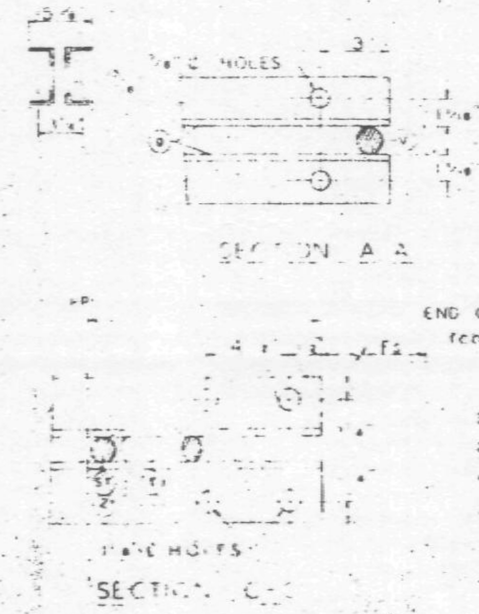

ALL PANEL POINTS RESISTANCE WELDED (x). ARC WELDS INDICATED AT SHADED AREAS AND AT BOTTOM CHORD WEB SPLICES. ALL WELD DETAILS SHOWN ON SHEETS ST290, ST291, ST292, ST293 AND ST280

CHORD PLATE DETAILS SHOWN ON SHEET ST280. SEE SHEET ST295 FOR V1, V2, & V3 DETAILS. LETTERS IN HEXAGON INDICATE WELD DETAIL, i.e., A. LETTERS AND NUMBERS IN SQUARES INDICATE RESISTANCE WELD STRENGTH IDENTIFIED IN THE QUALITY CONTROL PROGRAM, i.e., R-6

DAMPING UNIT CONNECTION PLATE ATTACHED TO BOTTOM CHORD CORE END IN FIELD ASSEMBLY BY CONTRACT WTC 223.00.

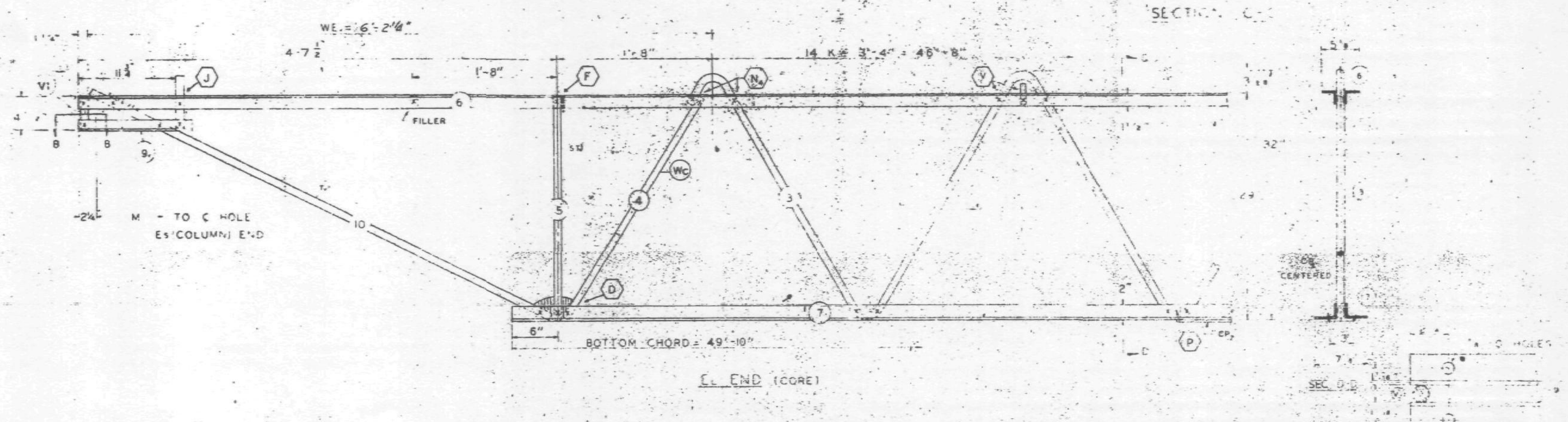

NO.	DATE	REVISION	BY

REF. DRWGS: 7-AB0-4, 7-AB-52, 7-AB1-53, 7-AB4-50, 7-AB3-2, 7-AB4-50.1

PAINT: LACLEDE ELECTRO COAT, RED No. 1000

TRUSS DESIGNATION	TOP CHORD TWO ANGLES MK	TYPE STEEL	CHORD SIZE	LENGTH	BOTTOM CHORD TWO ANGLES MK	TYPE STEEL	CHORD SIZE	LENGTH	MAIN WEB "W" MK	TYPE STEEL	DIA	LENGTH	NO OF K	FILLER NO	DIA	"M" ℄-℄ HOLE	CONNECTION FILLERS NO.	DIA	LENGTH	CHORD PLATE MK	TYPE STEEL	SIZE	LENGTH
C32T7F 592	6	A242	2"x1½"x.3	59'-2"	7	A36	3"x2"x.33	49'-10"	3	A36	1.09	88'-1¼"	14 @ 3'-4" = 46'-8"	11	1.09	58'-8¾"	4	1.09"	3"	CP	A36	4x3	40'-0"

COLUMN END

Es END TRUSS DESIGNATION	BEARING ANGLES MK	TYPE STEEL	CHORD SIZE	LENGTH	WE	DIAGONAL "T" STRUT MK	TYPE STEEL	DIA	LENGTH	VERTICAL "ST" STRUT MK	TYPE STEEL	DIA	LENGTH	END STIFFENER MK. V1 TYPE STEEL	DIA	LENGTH	MK. V3 TYPE STEEL	DIA	LENGTH	DOUBLE STRUT MK	TYPE STEEL	DIA	LENGTH
C32T7F 592	9	A242	2"x1½"x.25	2'-3	6'-1¼"		A36	1.09	6'-3⅛"	2	A36	1.09	2'-4⅞"	A36	1.09	4⅜"	A36	1.09	2'-9½"	DS	A242	.92	5'-3⅛"

CHECK DIMENSION FOR TRUSS FAB LOCATION OF TRANS TRUSS CL-1	CL-2	CL-3	CL-4	Fs
9'-6½"	22'-10½"	35'-2⅛"	49'-6½"	5'-2½"

CORE END

EL END TRUSS DESIGNATION	BEARING ANGLES MK	TYPE STEEL	CHORD SIZE	LENGTH	WE	DIAGONAL "T" STRUT MK	TYPE STEEL	DIA	LENGTH	VERTICAL "ST" STRUT MK	TYPE STEEL	DIA	LENGTH	END STIFFENER MK. V1 TYPE STEEL	DIA	LENGTH	MK. V2 TYPE STEEL	DIA	LENGTH	MK. V4 TYPE STEEL	DIA	LENGTH	WEB "WC" MK	TYPE STEEL	PCS	DIA	LENGTH	WEB "WT" MK	TYPE STEEL	PCS	DIA	LENGTH
C32T7F 592	9	A242	2"x1½"x.25	-1½	6'-2¼"	10	A242	1.14	5'-0½"	5	A242	1.14	2'-4⅞"	A242	1.14	4⅞"	A242	1.14	7⅜"	—	—	—	4	A242	1	1.14	2'-10"	-	—	—	—	—

STEEL TRUSS DETAILS
WORLD TRADE CENTER N.Y.C.
THE PORT OF NEW YORK AUTHORITY

FLOOR TRUSS C32T7F 59'-2" OVERALL
WORLD TRADE CENTER TOWER A-8

LACLEDE STEEL COMPANY

DESIGN DRAWING NO. 7-AB1-4 7-AB3-2

James White

DATE 3/24/69 DRAWN BY LWR DATE MAR 6, 1969
CHECKED BY T.M. CHIPA MAR 6, 1969
WTC 221 SHEET NO. ST207F

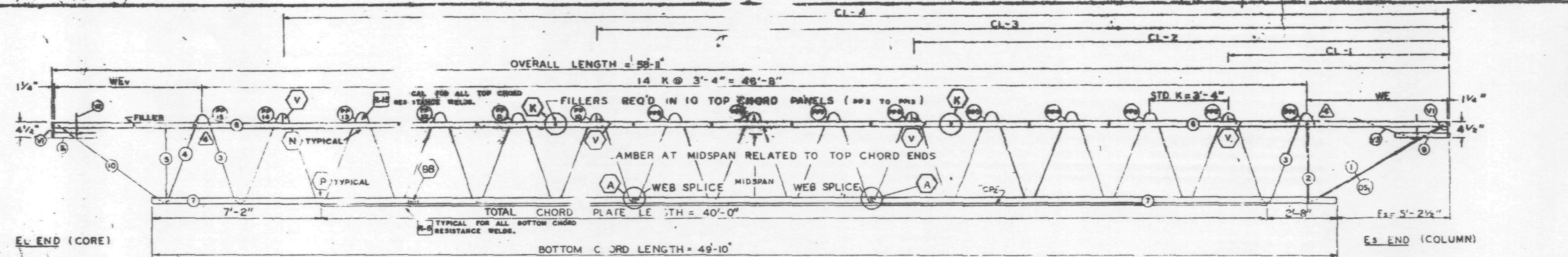

TRUSS ELEVATION

FABRICATION REQUIRMENTS	DESIGN	TOLERANCES
CAMBER AT MIDSPAN	2 1/16"	± 3/8"
DESIGN DEPTH	29"	± 1/8"
PANEL "K"	3'-4"	± 1/4"
OVERALL LENGTH	58'-11"	± 3/8"
WEB - DEPTH	31 7/8"	± 1/4"

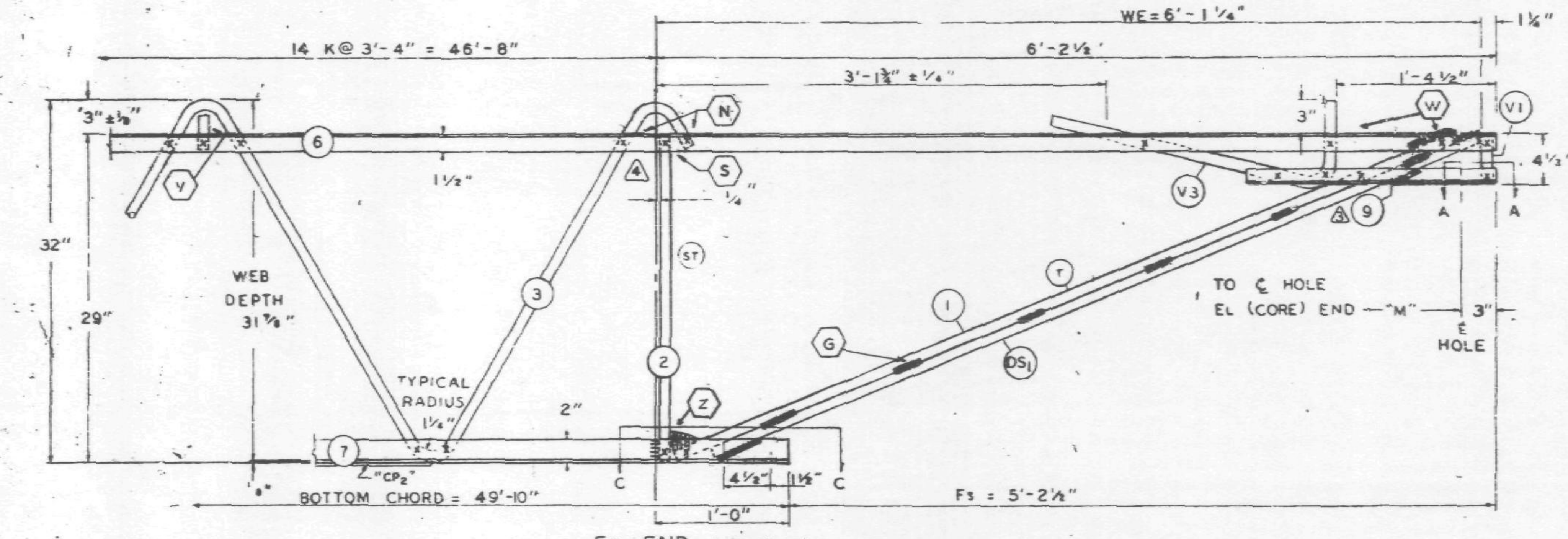

Es END (COLUMN)

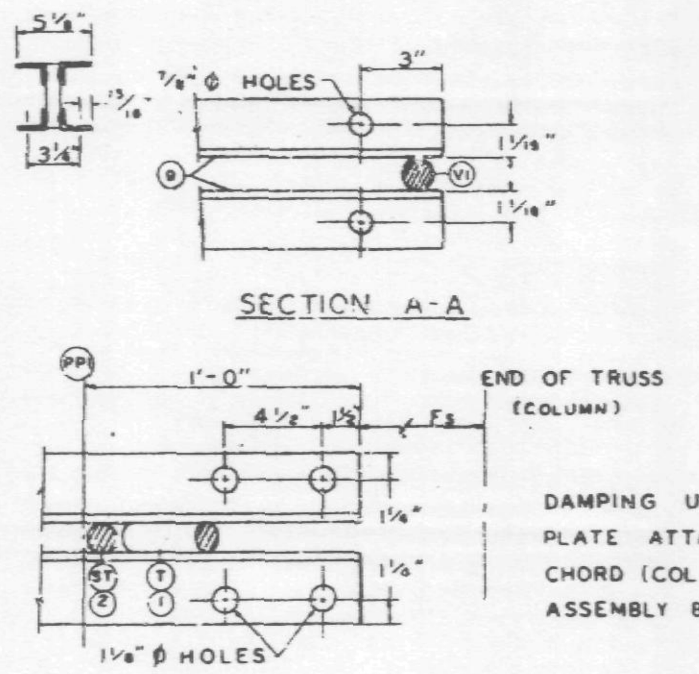

SECTION A-A

SECTION C-C

ALL PANEL POINTS RESISTANCE WELDED (x).
ARC WELDS INDICATED AT SHADED AREAS AND AT BOTTOM CHORD WEB SPLICES.
ALL WELD DETAILS SHOWN ON SHEETS ST290, ST291, ST292, ST293 AND ST280. (4)

CHORD PLATE DETAILS SHOWN ON SHEET ST280.
SEE SHEET ST295 FOR V1, V2, & V3 DETAILS.
LETTERS IN HEXAGON INDICATE WELD DETAIL, ie. (A).
LETTERS AND NUMBERS IN SQUARES INDICATE RESISTANCE WELD STRENGTH IDENTIFIED IN THE QUALITY CONTROL PROGRAM, ie. [R-6].

DAMPING UNIT CONNECTION PLATE ATTACHED TO BOTTOM CHORD (COL END) IN FIELD.
ASSEMBLY BY CONTRACT WTC 223.00.

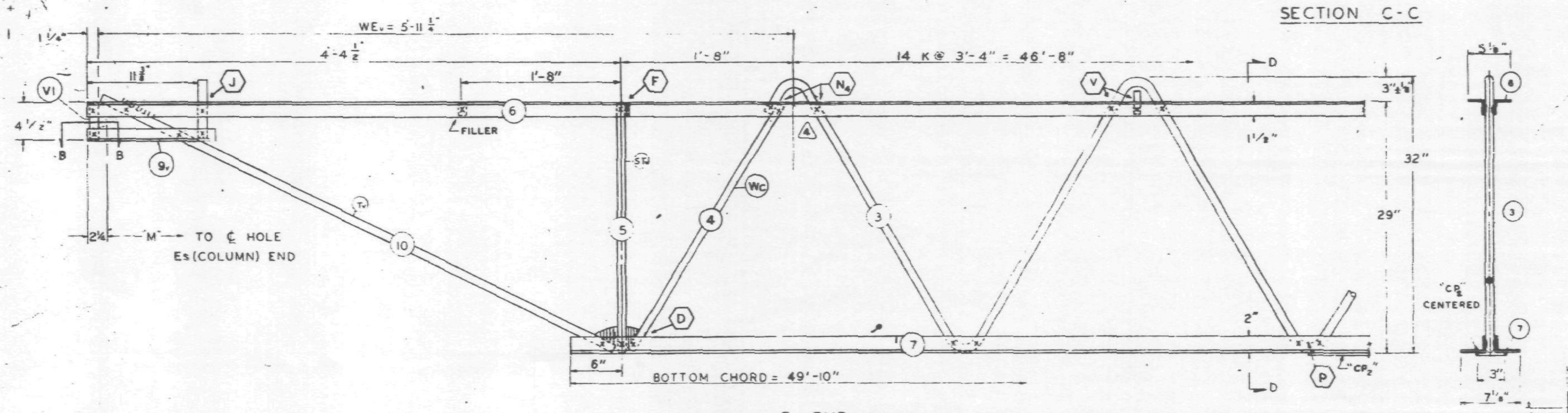

El END (CORE)

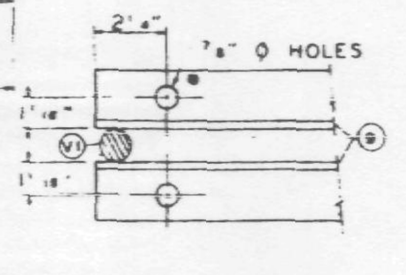

SECTION B-B

NO.	DATE	REVISION	
4	12-9-68	AS NOTED	G.D.C.
3	7-22-68	MK. (9) LENGTH	T.M.C.
2	6-22-68	GENERAL	T.M.C.
1	5-27-68	CHORD PLATE, WELD, T DIAGONAL	T.M.C.

(4) REF DRWGS.

7-AB1-4	7-22-68
7-AB1-52	2-15-68
7-AB1-53	7-22-68
7-AB4-50	8-1-68
7-AB3-2	1-3-68
7-AB4-50 5	10-20-67

PAINT
LACLEDE ELECTROCOAT
RED NO. 10001

STEEL TRUSS DETAILS
FOR
WORLD TRADE CENTER · N.Y.C
FOR
THE PORT OF NEW YORK AUTHORITY

FLOOR TRUSS C32T7G 58'-11" OVERALL
WORLD TRADE CENTER TOWER A-B

FABRICATION BY LACLEDE STEEL COMPANY

FABRICATED AT MADISON, ILLINOIS		DESIGN DRAWING NO 7-AB1-4 7-AB3-2	PLATE
APPROVED FOR FABRICATION FOR P.O.N.Y.A. James White	DATE 12/12/68	DRAWN BY lwk DATE APR. 18, 1968	
APPROVED FOR FABRICATION BY FOR FABRICATOR	DATE	CHECKED BY T.M. CHURA DATE APR. 18, 1968	IN CHARGE OF PROD DEV
LACLEDE STEEL CO. DETAILED BY A.C. WEBER		FABRICATION CONT NO WTC 221	SHEET NO. ST207G

TRUSS DESIGNATION	TOP CHORD TWO ANGLES				BOTTOM CHORD TWO ANGLES				MAIN WEB "W"					FILLER		"M" C/C HOLE	CONNECTION FILLERS			CHORD PLATE			
	MK	TYPE STEEL	CHORD SIZE	LENGTH	MK	TYPE STEEL	CHORD SIZE	LENGTH	MK	TYPE STEEL	DIA	(4) LENGTH	NO. OF K	NO	DIA		NO.	DIA.	LENGTH	MK	TYPE STEEL	SIZE	LENGTH
C32T7G-5811	6	A242	2"x1 1/2"x.31	58'-11"	7	A36	3"x2"x.33	49'-10"	3	A36	1.09	88'-1 1/4"	14 @ 3'-4" = 46'-8"	11	1.09	58'-5 3/4"	4	1.09"	3"	CP	A36	1/4x3	40'-0" (1)

COLUMN END

Es END	TRUSS DESIGNATION	BEARING ANGLES				WE	DIAGONAL "T" STRUT				VERTICAL "ST" STRUT				END STIFFENER MK. V1			END STIFFENER MK. V3			DOUBLE STRUT			
		MK	TYPE STEEL	CHORD SIZE	(3) LENGTH		MK	TYPE STEEL	DIA	LENGTH	MK	TYPE STEEL	DIA	(4) LENGTH	TYPE STEEL	DIA	LENGTH	TYPE STEEL	DIA	LENGTH	MK	TYPE STEEL	DIA	LENGTH
	C32T7G-5811	9	A242	2"x1 1/2"x.25	2'-3"	6'-1 1/4"	1	A36	1.09	6'-3 1/8" (1)	2	A36	1.09	2'-4 7/8"	A36	1.09	4 3/8"	A36	1.09	2'-9 1/2"	DS1	A242	.92	6'-3 1/8" (1)

CHECK DIMENSION FOR TRUSS FAB. LOCATION OF TRANS. TRUSS				
CL-1	CL-2	CL-3	CL-4	Fs
9'-6 1/2"	22'-10 1/2"	36'-2 1/2"	49'-6 1/2"	5'-2 1/2"

CORE END

El END	TRUSS DESIGNATION	BEARING ANGLES				WEv	DIAGONAL "Tv" STRUT				VERTICAL "STv" STRUT				STIFFENER MK. V1			STIFFENER MK. V2			STIFFENER MK. V4			WEB "Wc"					WEB "WT"					
		MK	TYPE STEEL	CHORD SIZE	LENGTH		MK	TYPE STEEL	DIA	LENGTH	MK	TYPE STEEL	DIA	(4) LENGTH	TYPE STEEL	DIA	LENGTH	TYPE STEEL	DIA	LENGTH	TYPE STEEL	DIA	LENGTH	MK	TYPE STEEL	PCS	DIA	(4) LENGTH	MK	TYPE STEEL	PCS	DIA	LENGTH	
	C32T7G-5811	9v	A242	2"x1 1/2"x.25	1'-1 1/4"	5'-11 1/2"	10	A242	1.14	4'-9 1/2"	5	A242	1.14	2'-4 7/8"	A242	1.14	4 3/8"	A242	1.14	7 3/8"	—	—	—	4	A242	1	1.14	2'-10"	-	—	—	—	—	

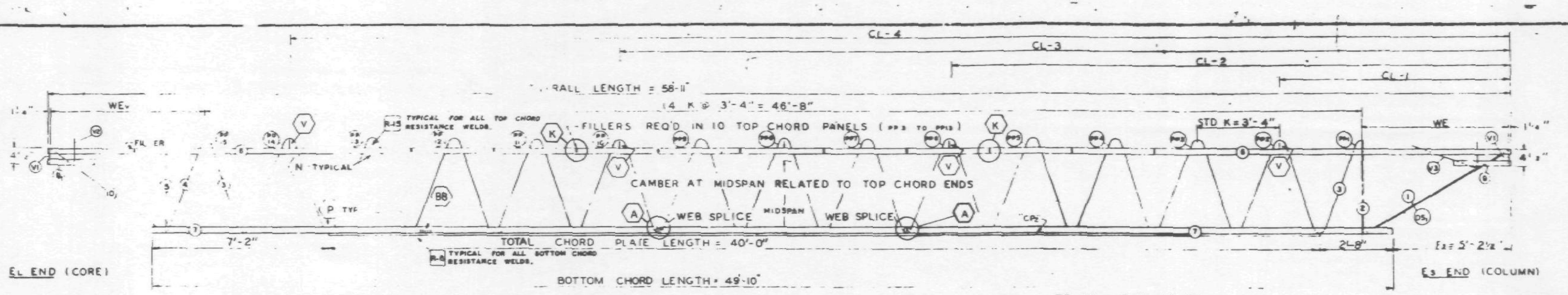

TRUSS ELEVATION

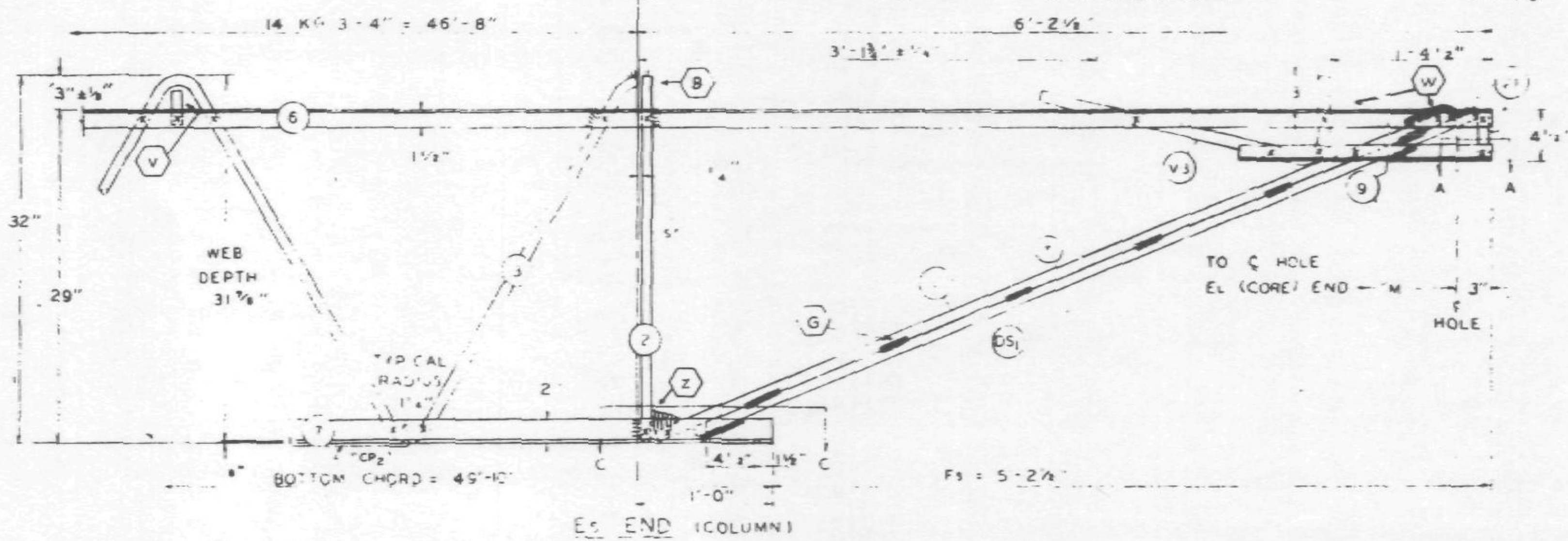

Es END (COLUMN)

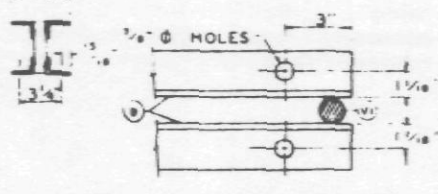

SECTION A-A

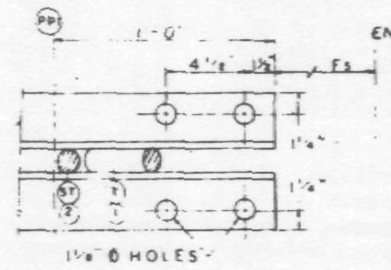

SECTION C-C

ALL PANEL POINTS RESISTANCE WELDED (x).
ARC WELDS INDICATED AT SHADED AREAS
AND AT BOTTOM CHORD WEB SPLICES.
ALL WELD DETAILS SHOWN ON SHEETS ST290, ST291, ST292
AND ST280.

CHORD PLATE DETAILS SHOWN ON SHEET ST280
SEE SHEET ST295 FOR V1, V2, & V3 DETAILS.
LETTERS IN HEXAGON INDICATE WELD DETAIL, ie., A.
LETTERS AND NUMBERS IN SQUARES INDICATE RE-
SISTANCE WELD STRENGTH IDENTIFIED IN THE
QUALITY CONTROL PROGRAM, ie., R-6.

DAMPING UNIT CONNECTION
PLATE ATTACHED TO BOTTOM
CHORD (COL END) IN FIELD
ASSEMBLY BY CONTRACT WTC 223.00.

FABRICATION REQUIRMENTS	DESIGN	TOLERANCE
CAMBER AT MIDSPAN	2 1/16"	± 3/8"
DESIGN DEPTH	29"	± 1/4"
PANEL "K"	3'-4"	± 1/4"
OVERALL LENGTH	58'-11"	± 3/8"
WEB DEPTH	31 7/8"	± 1/4"

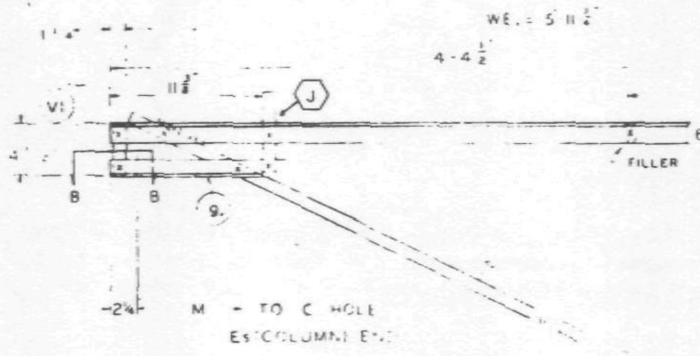

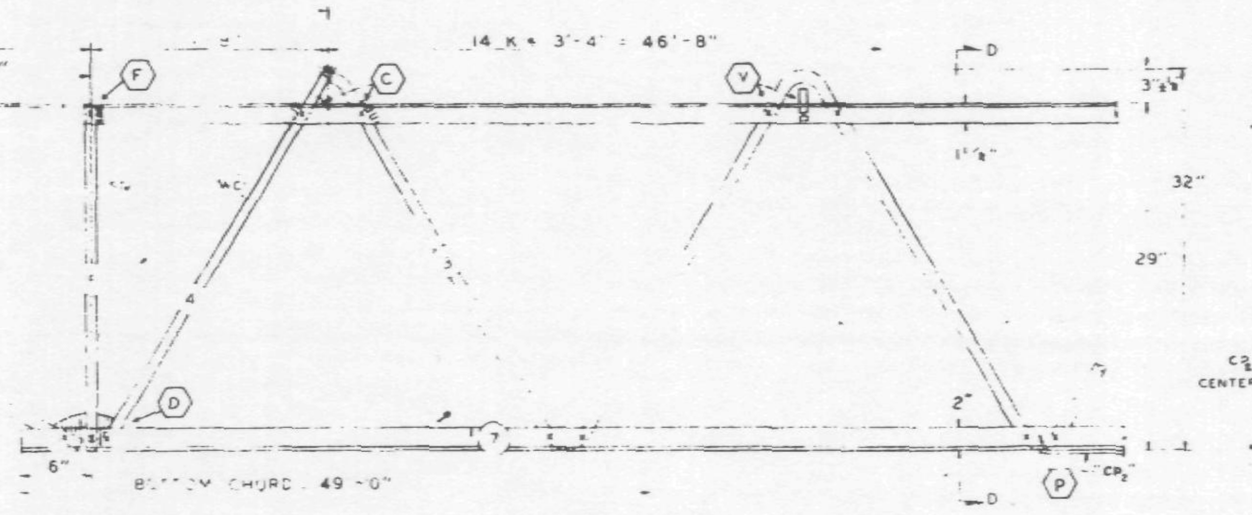

EL END (CORE)

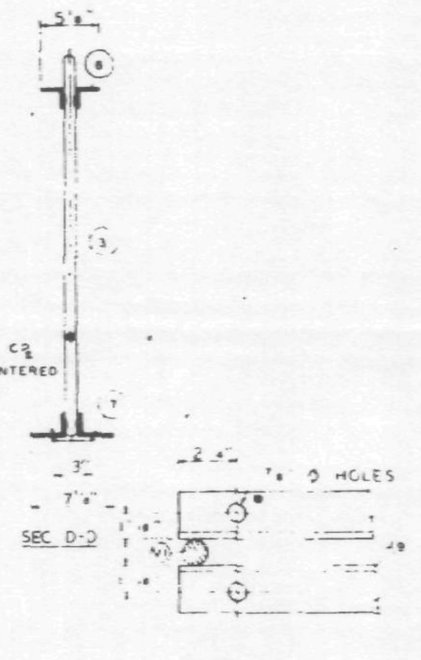

SECTION B-B

NO.	DATE	REVISION	BY
3	7-22-68	MK (9)	T.M.C.
2	6-22-68	GENERAL	T.M.C.
1	5-27-68	CHORD PLATE, WELD, T DIAGONAL	T.M.C.

REF DRWGS
7-AB1-4 4-5-68
7-AB1-52 2-15-68
7-AB1-53 4-1-68
7-AB4-50 & 50.2 10-20-67
7-AB3-2
7-AB4-50.5 10-20-67

PAINT
LACLEDE ELECTRO COAT
RED NO. 1000

TRUSS DESIGNATION	TOP CHORD TWO ANGLES				BOTTOM CHORD TWO ANGLES				MAIN WEB "W"					FILLER		"M" C-C HOLE	CONNECTION FILLERS			CHORD PLATE			
	MK	TYPE STEEL	CHORD SIZE	LENGTH	MK	TYPE STEEL	CHORD SIZE	LENGTH	MK	TYPE STEEL	DIA	LENGTH	NO OF K	NO	DIA		NO	DIA	LENGTH	MK	TYPE STEEL	SIZE	LENGTH
C32T7G-5811	6	A242	2"x1½"x [illegible]	58'-11"	7	A36	3"x2"x33	49'-10"	3	A36	1.09	87'-2½"	14 @ 3'-4" = 46'-8"	11	1.09	58'-5¾"	4	1.09"	3"	CP	A36	¼x3	40'-0"

COLUMN END

Es END	TRUSS DESIGNATION	BEARING ANGLES				WE	DIAGONAL "T" STRUT				VERTICAL "ST" STRUT				END STIFFENER MK V1			END STIFFENER MK V3			DOUBLE STRUT			
		MK	TYPE STEEL	CHORD SIZE	LENGTH		MK	TYPE STEEL	DIA	LENGTH	MK	TYPE STEEL	DIA	LENGTH	TYPE STEEL	DIA	LENGTH	TYPE STEEL	DIA	LENGTH	MK	TYPE STEEL	DIA	LENGTH
	C32T7G-5811	9	A242	2"x1½"x25	2'-3"	6'-1¼"	1	A36	1.09	6'-3⅛"	2	A36	1.09	2'-7⅞"	A36	1.09	4⅞"	A36	1.09	2'-9½"	DS1	A242	.92	6'-3⅛"

CHECK DIMENSION FOR TRUSS FAB — LOCATION OF TRANS TRUSS				
CL-1	CL-2	CL-3	CL-4	Fs
9'-6½"	22'-10½"	36'-2½"	49'-6½"	5'-2½"

CORE END

EL END	TRUSS DESIGNATION	BEARING ANGLES				WE	DIAGONAL "T" STRUT				VERTICAL "ST" STRUT				END STIFFENER MK V1			END STIFFENER MK V2			END STIFFENER MK V4			WEB "WC"					WEB "WT"				
		MK	TYPE STEEL	CHORD SIZE	LENGTH		MK	TYPE STEEL	DIA	LENGTH	MK	TYPE STEEL	DIA	LENGTH	TYPE STEEL	DIA	LENGTH	TYPE STEEL	DIA	LENGTH	TYPE STEEL	DIA	LENGTH	MK	TYPE STEEL	PCS	DIA	LENGTH	MK	TYPE STEEL	PCS	DIA	LENGTH
	C32T7G-5811	9	A242	2"x1½"x25	1'-1¼"	5'-11½"	10	A242	1.14	4'-9½"	5	A242	1.14	2'-4¾"	A242		4½"	A242	1.14	7½"	—	—	—	4	A242	1	1.14	3'-0½"	-	—	—	—	—

STEEL TRUSS DETAILS

FLOOR TRUSS C32T7G 58'-11" OVERALL
WORLD TRADE CENTER TOWER A-B

FABRICATION BY LACLEDE STEEL COMPANY
FABRICATED AT MADISON
DESIGN DRAWING NO. 7-AB1-4 7-AB3-2
APPROVED FOR FABRICATION
DATE APR 18, 1968
CHECKED BY T.M. CHURA
DATE APR 18, 1968
DETAILED BY A. WEBER
W.T.C. 221
SHEET NO. ST207G

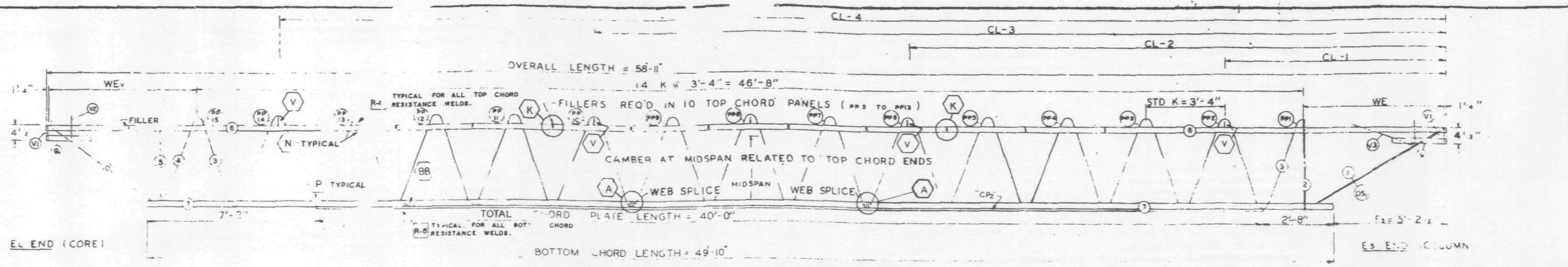

TRUSS ELEVATION

FABRICATION REQUIRMENTS	DESIGN	TOLERANCE
CAMBER AT MIDSPAN	2 1/16"	± 3/8"
DESIGN DEPTH	29"	± 1/4"
PANEL "K"	3'-4"	± 1/4"
OVERALL LENGTH	58'-11"	± 3/8"
WEB DEPTH	31 7/8"	± 1/ "

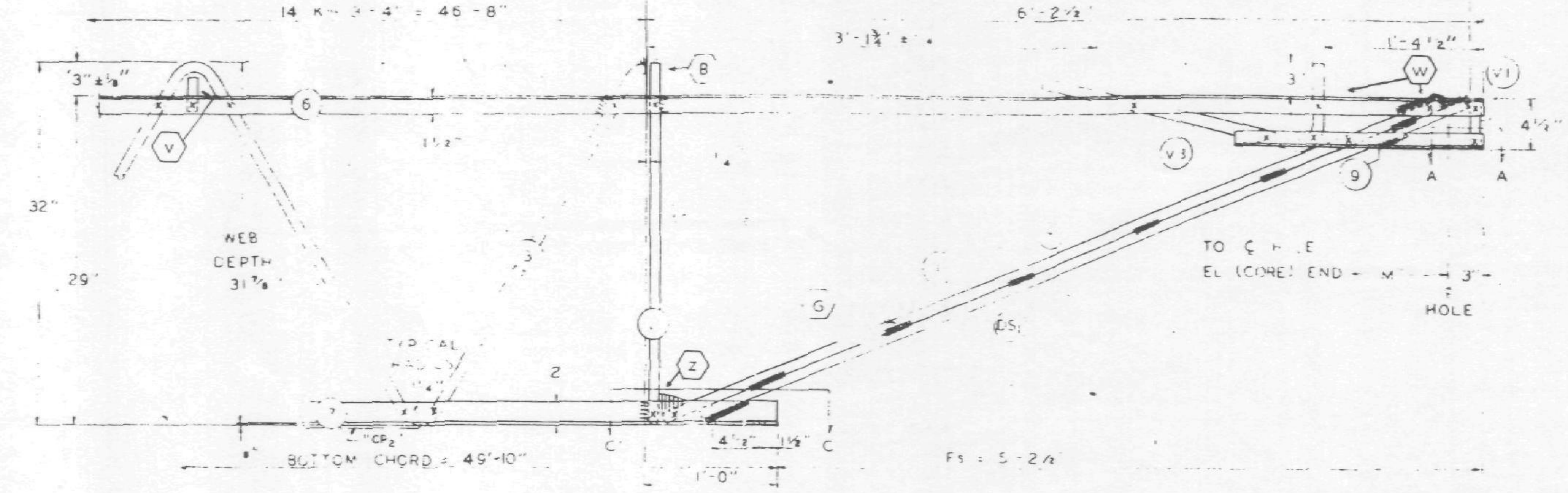

Es END (COLUMN)

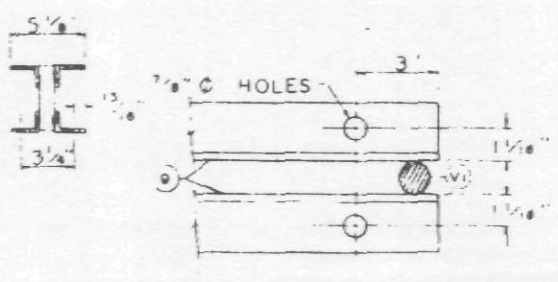

SECTION A-A

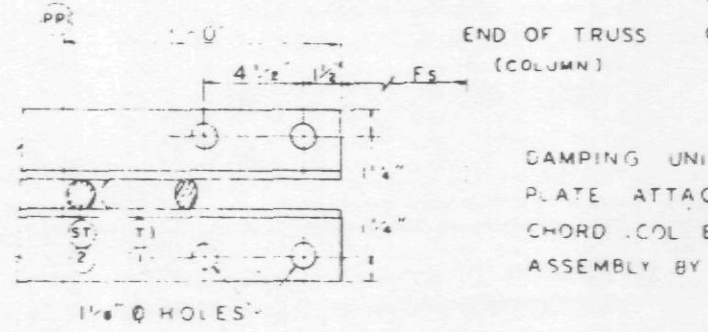

SECTION C-C

ALL PANEL POINTS RESISTANCE WELDED (x).
ARC WELDS INDICATED AT SHADED AREAS
AND AT BOTTOM CHORD WEB SPLICES.
ALL WELD DETAILS SHOWN ON SHEETS ST290, ST291, ST292
AND ST280.

CHORD PLATE DETAILS SHOWN ON SHEET ST280
SEE SHEET ST235 FOR V1, V2, & V3 DETAILS.
LETTERS IN HEXAGON INDICATE WELD DETAIL, ie., A.
LETTERS AND NUMBERS IN SQUARES INDICATE RESISTANCE WELD STRENGTH IDENTIFIED IN THE
QUALITY CONTROL PROGRAM, ie., R-6.

DAMPING UNIT CONNECTION
PLATE ATTACHED TO BOTTOM
CHORD (COL END) IN FIELD
ASSEMBLY BY CONTRACT WTC 223.00.

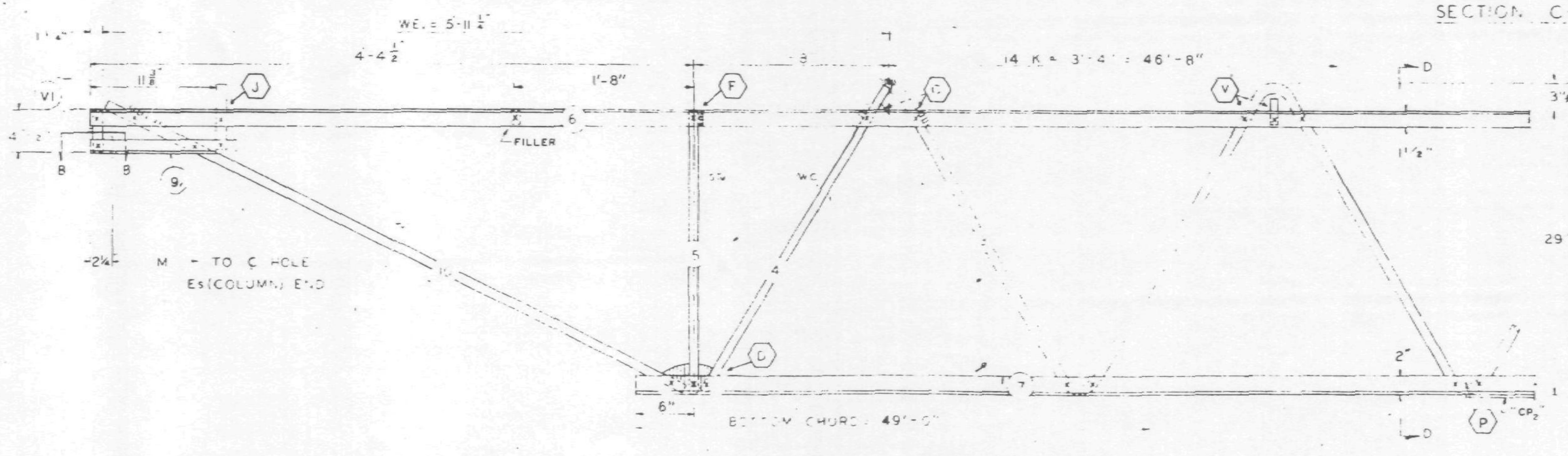

EL END (CORE)

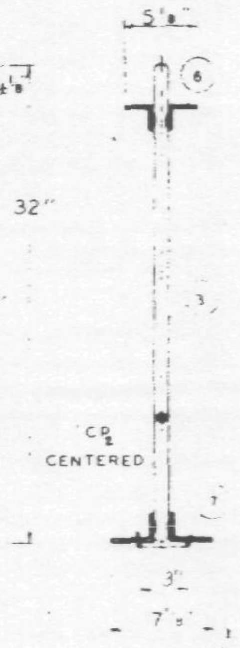

SEC D-D

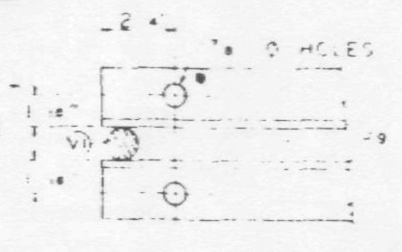

SECTION B-B

NO.	DATE	REVISION	BY
2	6-22-68	GENERAL	T.M.C.
1	5-27-68	CHORD PLATE, WELD, T DIAGONAL	T.M.C.

REF DRWGS

7-AB1-4	4-15-68
7-AB-52	2-15-68
7-AB1-53	4-1-68
7-AB4-50 & 50 2	10-20-67
7-AB3 2	[illegible]
7-AB4-50 5	10-20-67

PAINT
LACLEDE ELECTRO COAT
RED NO 1000

TRUSS DESIGNATION	TOP CHORD TWO ANGLES MK	TYPE STEEL	CHORD SIZE	LENGTH	BOTTOM CHORD TWO ANGLES MK	TYPE STEEL	CHORD SIZE	LENGTH	MAIN WEB "W" MK	TYPE STEEL	DIA	LENGTH	NO OF K	FILLER NO	DIA	"M" ℄-℄ HOLE	CONNECTION FILLERS NO.	DIA	LENGTH	CHORD PLATE MK	TYPE STEEL	SIZE	LENGTH
C32T7G-5811	6	A242	2"x1 1/2"x 3[illegible]	58'-11"	7	A36	3"x2"x 33	49'-10"	3	A36	1.09	87'-2 1/2"	14 @ 3'-4" = 46'-8"	11	1.09	58'-5 3/4"	4	1.09"	3"	CP	A36	1/4x3	40'-0"

COLUMN END

Es END TRUSS DESIGNATION	BEARING ANGLES MK	TYPE STEEL	CHORD SIZE	LENGTH	WE	DIAGONAL "T" STRUT MK	TYPE STEEL	DIA	LENGTH	VERTICAL "ST" STRUT MK	TYPE STEEL	DIA	LENGTH	END STIFFENER MK V1 TYPE STEEL	DIA	LENGTH	MK V3 TYPE STEEL	DIA	LENGTH	DOUBLE STRUT MK	TYPE STEEL	DIA	LENGTH
C32T7G-5811	9	A242	2"x1 1/2"x 25	2'-0"	6'-1 1/4"		A36	1.09	6'-3 1/8"	2	A36	1.09	2'-7 7/8"	A36	1.09	4 3/8"	A36	1.09	2'-9 1/2"	DS1	A242	.92	6'-3 1/8"

CORE END

EL END TRUSS DESIGNATION	BEARING ANGLES MK	TYPE STEEL	CHORD SIZE	LENGTH	WEv	DIAGONAL "Tv" STRUT MK	TYPE STEEL	DIA	LENGTH	VERTICAL "STv" STRUT MK	TYPE STEEL	DIA.	LENGTH	STIFFENER MK V1 TYPE STEEL	DIA.	LENGTH	MK V2 TYPE STEEL	DIA.	LENGTH	MK V4 TYPE STEEL	DIA.	LENGTH	WEB "WC" MK	TYPE STEEL	PCS	DIA	LENGTH	WEB "WT" MK	TYPE STEEL	PCS	DIA.	LENGTH
C32T7G-5811	9v	A242	2"x1 1/2"x 25	1'-1 1/4"	5'-11 7/8"	10	A242	1.14	4'-9 1/2"	5	A242	1.14	2'-4 3/4"	A242	1.14	4 3/8	A242	1.14	7 3/8"	—	—	—	4	A242	1	1.14	3'-0 1/2"	-	—	—	—	—

CHECK DIMENSION FOR TRUSS FAB.

LOCATION OF TRANS. TRUSS

CL-1	CL-2	CL-3	CL-4	Fs
9'-6 1/2"	22'-10 1/2"	36'-2 1/2"	49'-6 1/2"	5'-2 1/2"

STEEL TRUSS DETAILS

FLOOR TRUSS C32T7G 58'-11" OVERALL
WORLD TRADE CENTER TOWER A-B

T-AB-4 T-AB3-2 PLATE
APPROVED FOR FABRICATION 6/25/68
APR. 18, 1968
T.M. CHURA IN CHARGE OF PROD. DEV.
APR 18, 1968
DETAILED BY ... WEBER
WTC 221
SHEET NO. ST207G

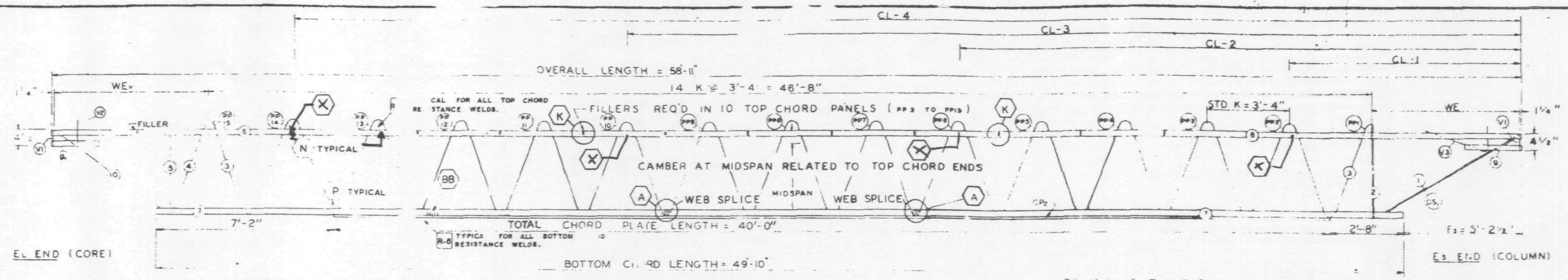

TRUSS ELEVATION

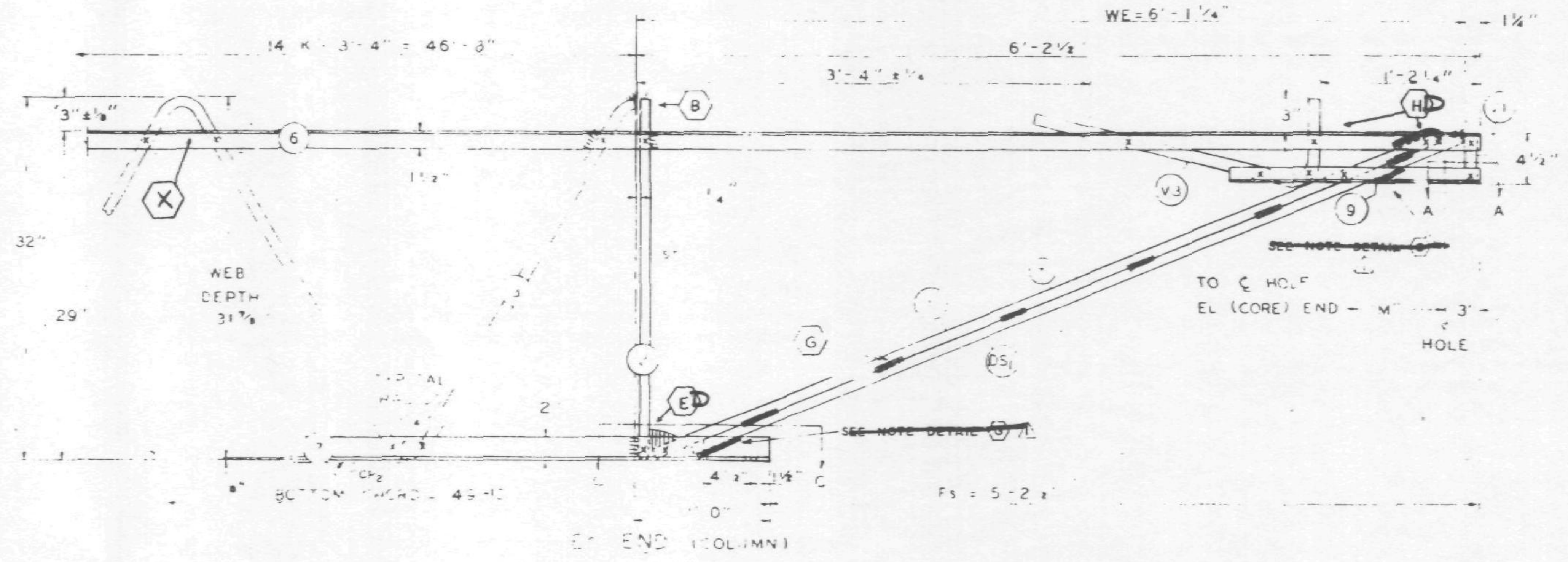

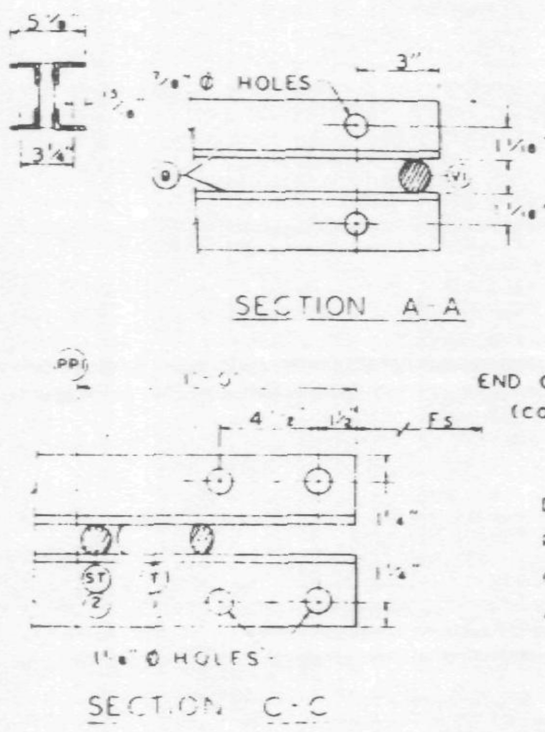

ALL PANEL POINTS RESISTANCE WELDED (x).
ARC WELDS INDICATED AT SHADED AREAS
AND AT BOTTOM CHORD WEB SPLICES.
ALL WELD DETAILS SHOWN ON SHEETS ST290, ST291, AND ST280.

CHORD PLATE DETAILS SHOWN ON SHEET ST280.
SEE SHEET ST295 FOR V1, V2, & V3 DETAILS.
LETTERS IN HEXAGON INDICATE WELD DETAIL, ie., A.
LETTERS AND NUMBERS IN SQUARES INDICATE RESISTANCE WELD STRENGTH IDENTIFIED IN THE QUALITY CONTROL PROGRAM, ie., R-6.

DAMPING UNIT CONNECTION PLATE ATTACHED TO BOTTOM CHORD (COL END) IN FIELD ASSEMBLY BY CONTRACT WTC 223.00.

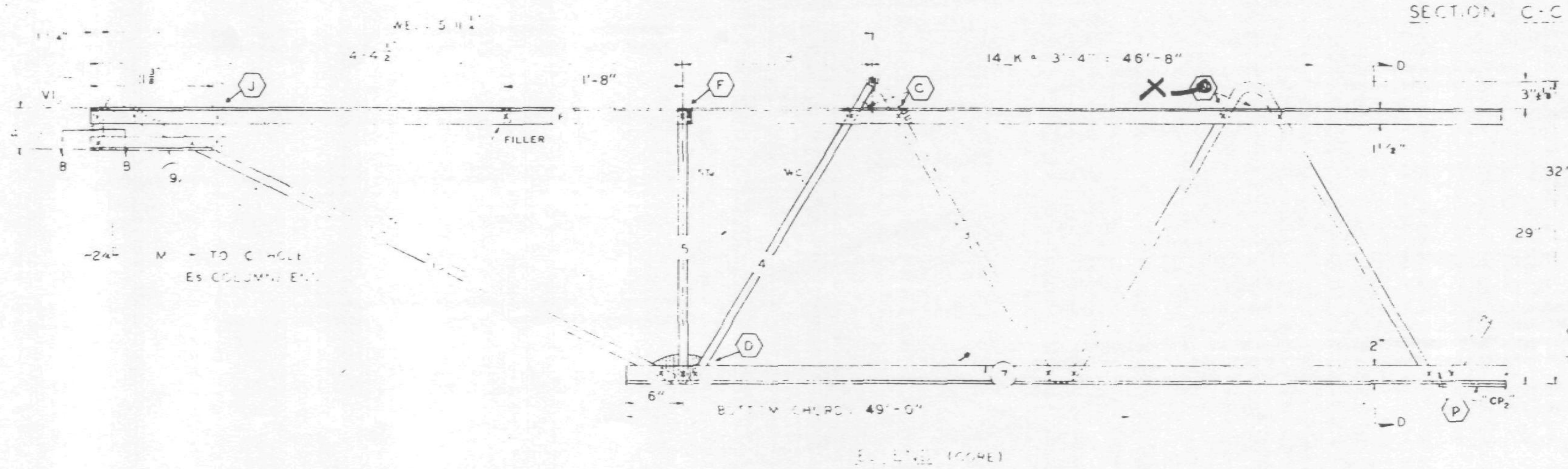

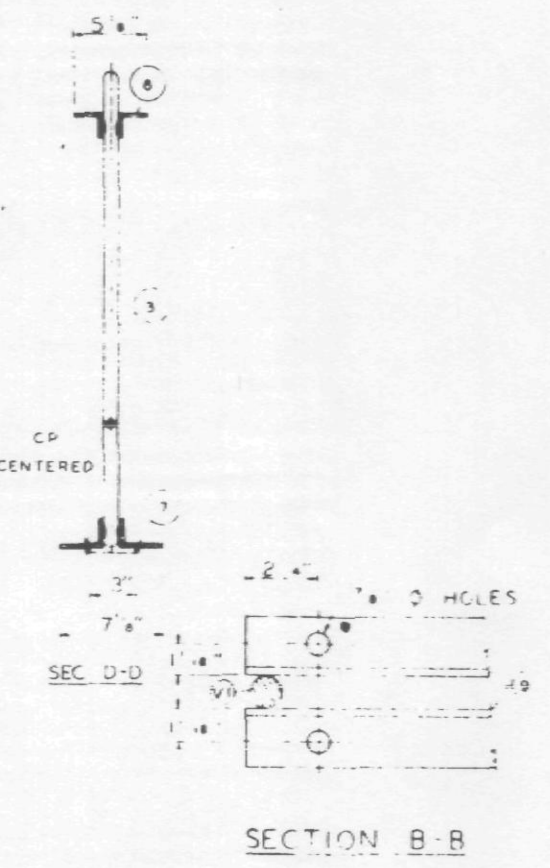

FABRICATION REQUIRMENTS	DESIGN	TOLERANCE
CAMBER AT MIDSPAN	1"	± 3/8"
DESIGN DEPTH	29"	± 1/4"
PANEL "K"	3'-4"	± 1/4"
OVERALL LENGTH	58'-11"	± 3/8"
WEB DEPTH	3' 8"	± 1/4"

6/13/68 WAB

NO.	DATE	REVISION	BY
1	5-27-68	CHORD PLATE, WELD, T DIAGONAL	T.M.C.

REF DRWGS

7-AB1-4	4-5-68
7-AB1-52	2-15-68
7-AB1-53	4-1-68
7-AB4 50 & 50 2	10-20-67
7-AB3 2	[illegible]
7-AB4-50 5	10-20-67

PAINT
LACLEDE ELECTROCOAT
RED NO 10001

TRUSS DESIGNATION	TOP CHORD TWO ANGLES				BOTTOM CHORD TWO ANGLES				MAIN WEB "W"					FILLER		"M" ℄ HOLE	TRUSS DATA		CHORD PLATE			
	MK	TYPE STEEL	CHORD SIZE	LENGTH	MK	TYPE STEEL	CHORD SIZE	LENGTH	MK	TYPE STEEL	DIA	LENGTH	NO OF K	NO	DIA				MK	TYPE STEEL	SIZE	LENGTH
C32T7G-5811	6	A242	2"x1½"x.3[illegible]	58'-11"	7	A36	3"x2"x.33	49'-10"	3	A36	1.09	87'-2½"	14 @ 3'-4" = 46'-8"	11	1.09	58'-5¾"			CP1	A36	¼x3	40'-0"

COLUMN END

Es END	TRUSS DESIGNATION	BEARING ANGLES				WE	DIAGONAL "T" STRUT				VERTICAL "ST" STRUT				END STIFFENER MK V1			END STIFFENER MK V3			DOUBLE STRUT			
		MK	TYPE STEEL	CHORD SIZE	LENGTH		MK	TYPE STEEL	DIA	LENGTH	MK	TYPE STEEL	DIA	LENGTH	TYPE STEEL	DIA	LENGTH	TYPE STEEL	DIA	LENGTH	MK	TYPE STEEL	DIA	LENGTH
	C32T7G-5811	9	A242	2"x1½"x.25	1'-10"	6'-1¼"	.	A36	1.09	6'-3⅛"	2	A36	1.09	2'-7⅞"	A36	1.09	4⅜"	A36	1.09	2'-9½"	DS1	A242	.75	6'-3⅛"

CHECK DIMENSION FOR TRUSS FAB LOCATION OF TRANS TRUSS

CL-1	CL-2	CL-3	CL-4	Fs
9'-6½"	22'-10½"	36'-2½"	49'-6½"	5'-2½"

CORE END

EL END	TRUSS DESIGNATION	BEARING ANGLES				WE	DIAGONAL "T" STRUT				VERTICAL "ST" STRUT				END STIFFENER MK V1			END STIFFENER MK V2			END STIFFENER MK V4			WEB "WC"					WEB "WT"				
		MK	TYPE STEEL	CHORD SIZE	LENGTH		MK	TYPE STEEL	DIA	LENGTH	MK	TYPE STEEL	DIA	LENGTH	TYPE STEEL	DIA	LENGTH	TYPE STEEL	DIA	LENG	TYPE STEEL	DIA	LENGTH	MK	TYPE STEEL	PCS	DIA	LENGTH	MK	TYPE STEEL	PCS	DIA	LENGTH
	C32T7G-5811	9	A242	2"x1½"x.25	1'-1¼	5'-1¼	10	A242	1.14	4'-9½"	5	A242	1.14	2'-4¾"	A242	1.14	4½	A242	1.14	7⅜"	—	—		4	A242	1	1.14	3'-0⅛"	-	—	—	-	--

STEEL TRUSS DETAILS
FOR
WORLD TRADE CENTER N.Y.C.
FOR
THE PORT OF NEW YORK AUTHORITY

FLOOR TRUSS C32T7G 58'-11" OVERALL
WORLD TRADE CENTER TOWER A-B

FABRICATION BY LACLEDE STEEL COMPANY
FABRICATED AT MADISON, ILLINOIS
DESIGN DRAWING NO. 7-AB1-4 7-AB3-2
APPROVED FOR FABRICATION DATE BY FOR PONYA
DRAWN BY [signature] DATE APR. 18, 1968
APPROVED FOR FABRICATION DATE BY FOR FABRICATOR
CHECKED BY T M CHURA DATE APR 18, 1968
DETAILED BY A C WEBER
FABRICATION CONTRACT NO. WTC 221
SHEET NO. ST207G

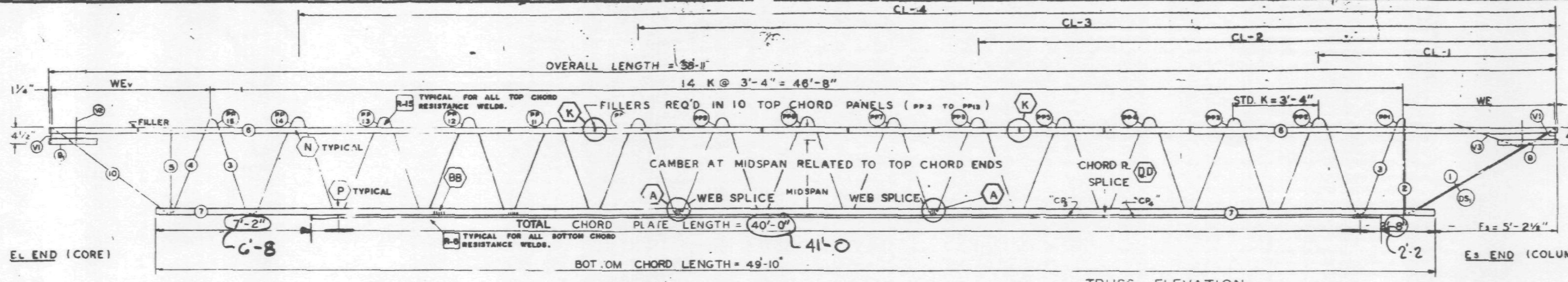

FABRICATION REQUIRMENTS

	DESIGN	TOLERANCE
CAMBER AT MIDSPAN	1"	± 3/8"
DESIGN DEPTH	29"	± 1/4"
PANEL "K"	3'-4"	± 1/4"
OVERALL LENGTH	58'-11"	± 1/8"
WEB DEPTH	31 7/8"	± 1/4"

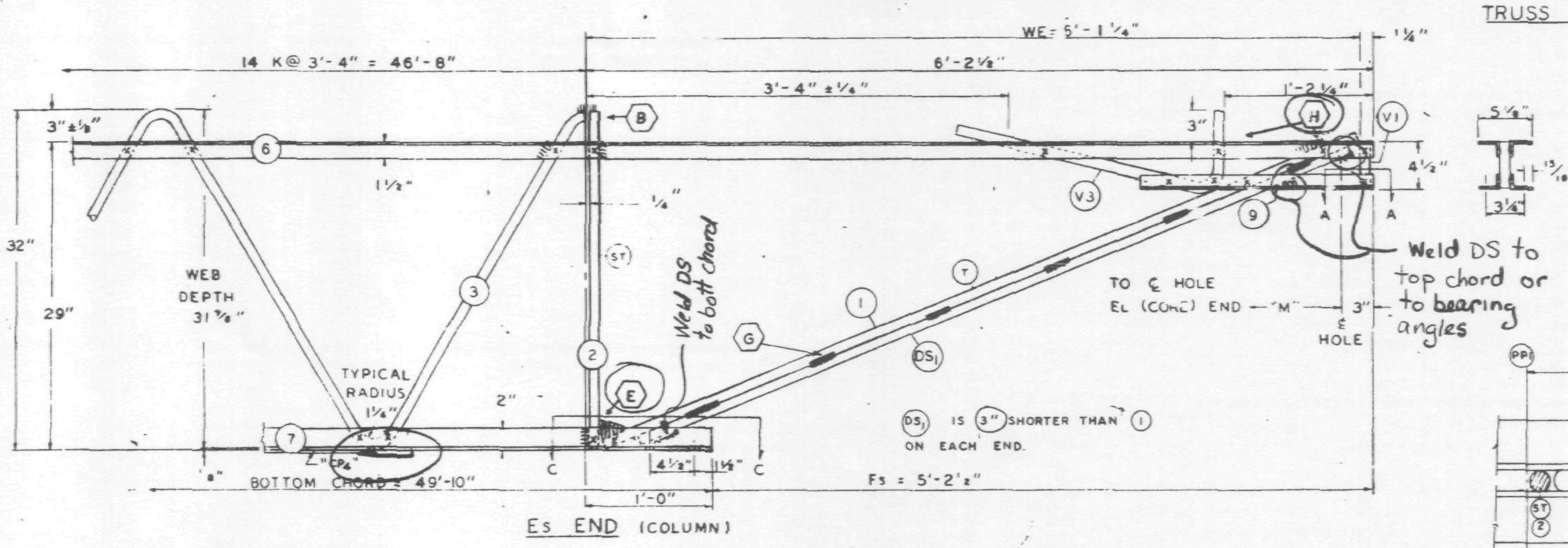

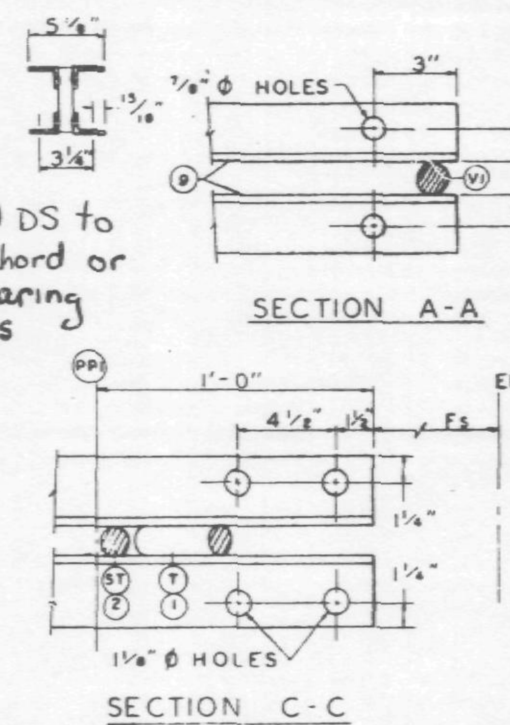

ALL PANEL POINTS RESISTANCE WELDED (x).
ARC WELDS INDICATED AT SHADED AREAS AND AT BOTTOM CHORD WEB SPLICES.
ALL WELD DETAILS SHOWN ON SHEETS ST290, ST291, AND ST280.

CHORD PLATE DETAILS SHOWN ON SHEET ST280.
SEE SHEET ST295 FOR V1, V2, & V3 DETAILS.
LETTERS IN HEXAGON INDICATE WELD DETAIL, ie., (A).
LETTERS AND NUMBERS IN SQUARES INDICATE RESISTANCE WELD STRENGTH IDENTIFIED IN THE QUALITY CONTROL PROGRAM, ie., R-6.

DAMPING UNIT CONNECTION PLATE ATTACHED TO BOTTOM CHORD (COL END) IN FIELD.
ASSEMBLY BY CONTRACT WTC 223.00.

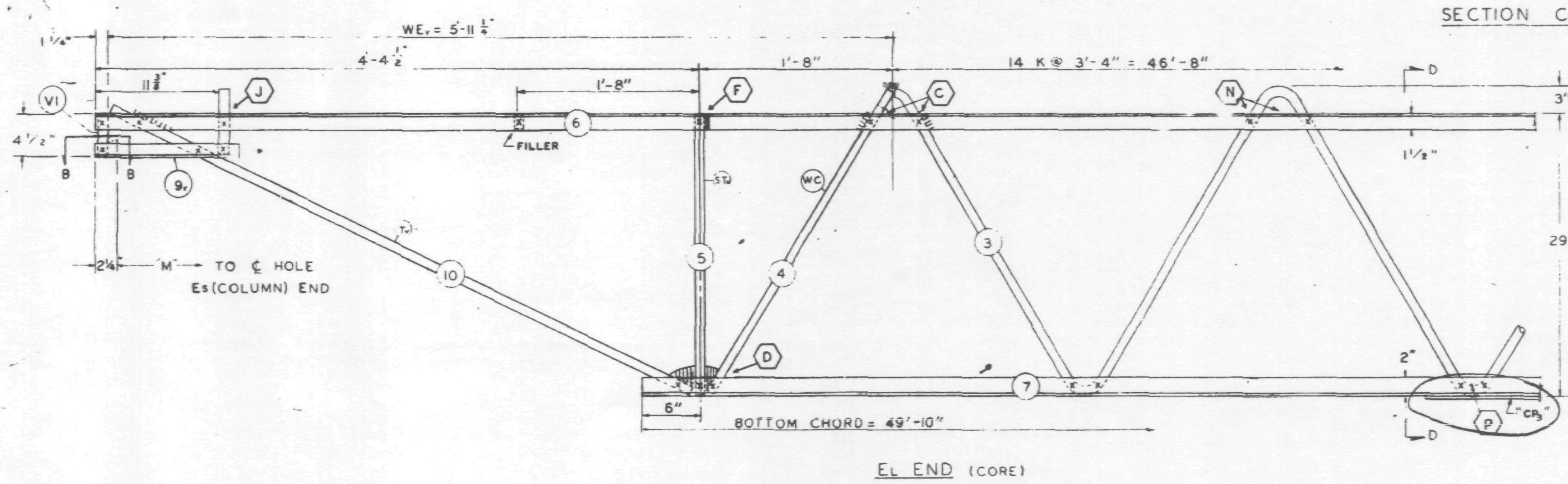

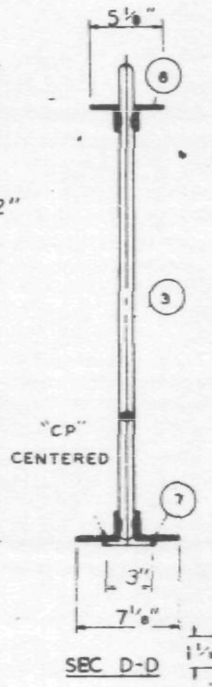

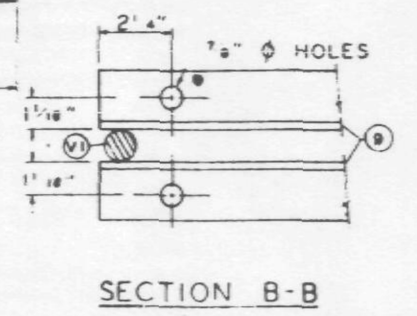

REF DRWGS

7-AB1-4	4-15-68
7-AB1-52	2-15-68
7-AB1-53	4-1-68
7-AB4-50 & 50.2	10-20-67
7-AB3-2	1-3-68
7-AB4-50.5	10-20-67

PAINT
LACLEDE ELECTROCOAT
RED NO. 10001

TRUSS DESIGNATION	TOP CHORD TWO ANGLES				BOTTOM CHORD TWO ANGLES				MAIN WEB "W"					FILLER		"M" C/C HOLE	TRUSS DATA		CHORD PLATES							
	MK	TYPE STEEL	CHORD SIZE	LENGTH	MK	TYPE STEEL	CHORD SIZE	LENGTH	MK	TYPE STEEL	DIA	LENGTH	NO. OF K	NO	DIA				MK	TYPE STEEL	SIZE	LENGTH	MK	TYPE STEEL	SIZE	LENGTH
C32T7G-5811	6	A242	2"x1½"x.31	58'-11"	7	A36	3"x2"x.33	49'-10"	3	A36	1.09	87'-2½"	14 @ 3'-4" = 46'-8"	11	1.09	58'-5¾"			CP	A36	¼x3	30'-0"	CP	A36	¼"x3"	10'-0" (11'-0")

COLUMN END

Es END	TRUSS DESIGNATION	BEARING ANGLES				WE	DIAGONAL "T" STRUT				VERTICAL "ST" STRUT				END STIFFENER MK. V1			END STIFFENER MK. V3			DOUBLE STRUT			
		MK	TYPE STEEL	CHORD SIZE	LENGTH		MK	TYPE STEEL	DIA	LENGTH	MK	TYPE STEEL	DIA	LENGTH	TYPE STEEL	DIA	LENGTH	TYPE STEEL	DIA	LENGTH	MK	TYPE STEEL	DIA	LENGTH
	C32T7G-5811	9	A242	2"x1½"x.25	1'-10"	6'-1¼"	1	A36	1.09	6'-5"	2	A36	1.09	2'-7⅞"	A36	1.09	4⅜"	[illegible]	[illegible]09	2'-9½"	DS1	A242	.92	5'-11"

CHECK DIMENSION FOR TRUSS FAB. LOCATION OF TRANS. TRUSS

CL-1	CL-2	CL-3	CL-4	Fs
9'-6⅛"	22'-10½"	36'-2½"	49'-6½"	5'-2½"

CORE END

EL END	TRUSS DESIGNATION	BEARING ANGLES				WEv	DIAGONAL "Tv" STRUT				VERTICAL "STv" STRUT				END STIFFENER MK. V1			END STIFFENER MK. V2			END STIFFENER MK. V4			WEB "WC"					WEB "WT"				
		MK	TYPE STEEL	CHORD SIZE	LENGTH		MK	TYPE STEEL	DIA	LENGTH	MK	TYPE STEEL	DIA	LENGTH	TYPE STEEL	DIA	LENGTH	TYPE STEEL	DIA	LENGTH	TYPE STEEL	DIA	LENGTH	MK	TYPE STEEL	PCS	DIA	LENGTH	MK	TYPE STEEL	PCS	DIA	LENGTH
	C32T7G-5811	9v	A242	2"x1½"x.25	1'-1¼"	5'-11½"	10	A242	1.14	4'-9½"	5	A242	1.14	2'-4¾"	A242	1.14	4⅞"	A242	1.14	7⅞"	—	—	—	4	A242	1	1.14	3'-0½"	-	—	—	-	—

4/26/68 SK

STEEL TRUSS DETAILS
FOR
WORLD TRADE CENTER - N.Y.C
FOR
THE PORT OF NEW YORK AUTHORITY

FLOOR TRUSS C32T7G 58'-11" OVERALL
WORLD TRADE CENTER TOWER A-B

FABRICATION BY LACLEDE STEEL COMPANY			
FABRICATED AT MADISON, ILLINOIS		DESIGN DRAWING NO 7-AB1-4 7-AB3-2	PLATE
APPROVED FOR FABRICATION BY FOR PONYA	DATE	DRAWN BY [signature] DATE APR. 18, 1968	
APPROVED FOR FABRICATION BY FOR FABRICATOR	DATE	CHECKED BY T.M. CHURA DATE APR. 18, 1968	IN CHARGE OF PROD DEV
DETAILED BY A.C. WEBER		FABRICATION CONT NO WTC 221	SHEET NO ST207G

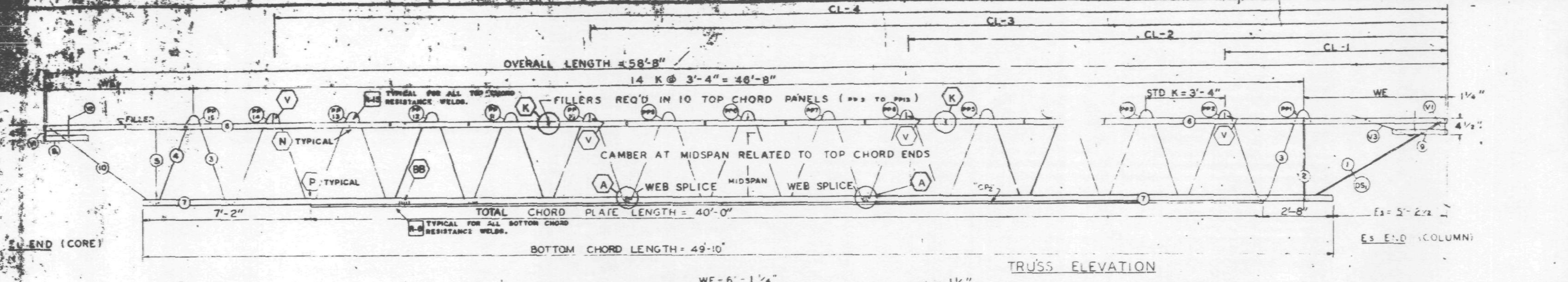

FABRICATION REQUIREMENTS	DESIGN	[illegible]
CAMBER AT MIDSPAN	2 1/16"	± 3/8"
DESIGN DEPTH	29"	± 1/4"
PANEL "K"	3'-4"	± 1/4"
OVERALL LENGTH	58'-8"	± 3/8"
WEB DEPTH	31 7/8"	± 1/4"

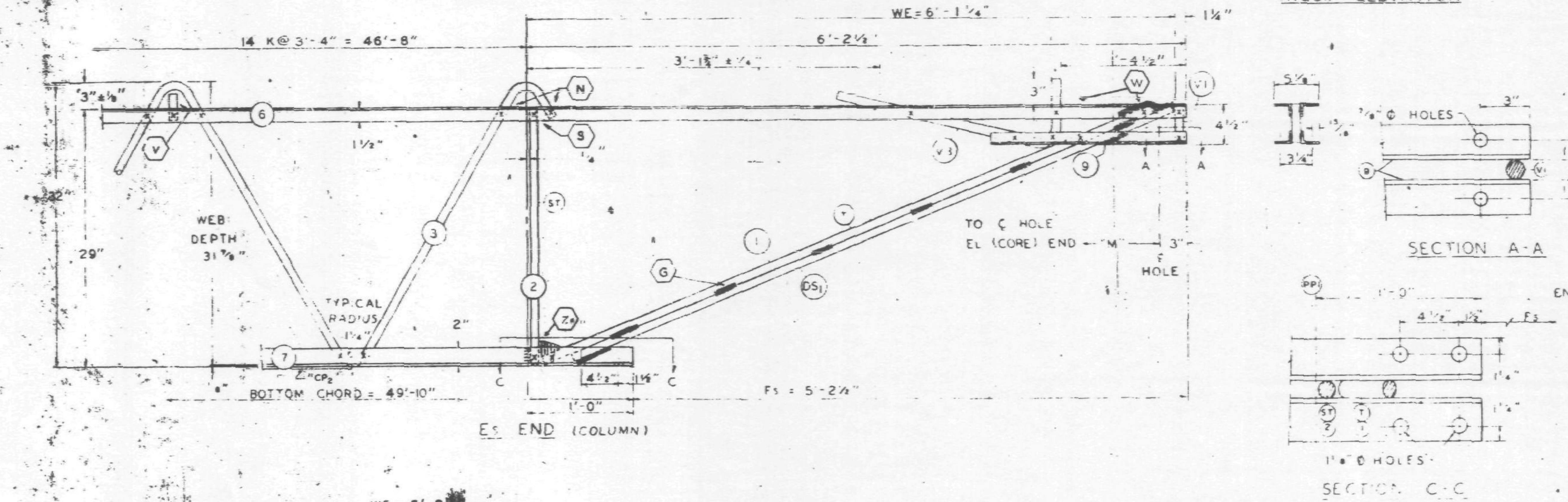

ALL PANEL POINTS RESISTANCE WELDED (x).
ARC WELDS INDICATED AT SHADED AREAS
AND AT BOTTOM CHORD WEB SPLICES.
ALL WELD DETAILS SHOWN ON SHEETS ST290, ST291, ST292, ST293
AND ST280.

CHORD PLATE DETAILS SHOWN ON SHEET ST280.
SEE SHEET ST295 FOR V1, V2, & V3 DETAILS.
LETTERS IN HEXAGON INDICATE WELD DETAIL, ie., A.
LETTERS, AND NUMBERS IN SQUARES INDICATE RE-
SISTANCE WELD STRENGTH IDENTIFIED IN THE
QUALITY CONTROL PROGRAM, ie., R-6.

DAMPING UNIT CONNECTION
PLATE ATTACHED TO BOTTOM
CHORD (COL END) IN FIELD
ASSEMBLY BY CONTRACT WTC 223.00.

TISHMAN
APR 1969
CONSTRUCTION DEPT.

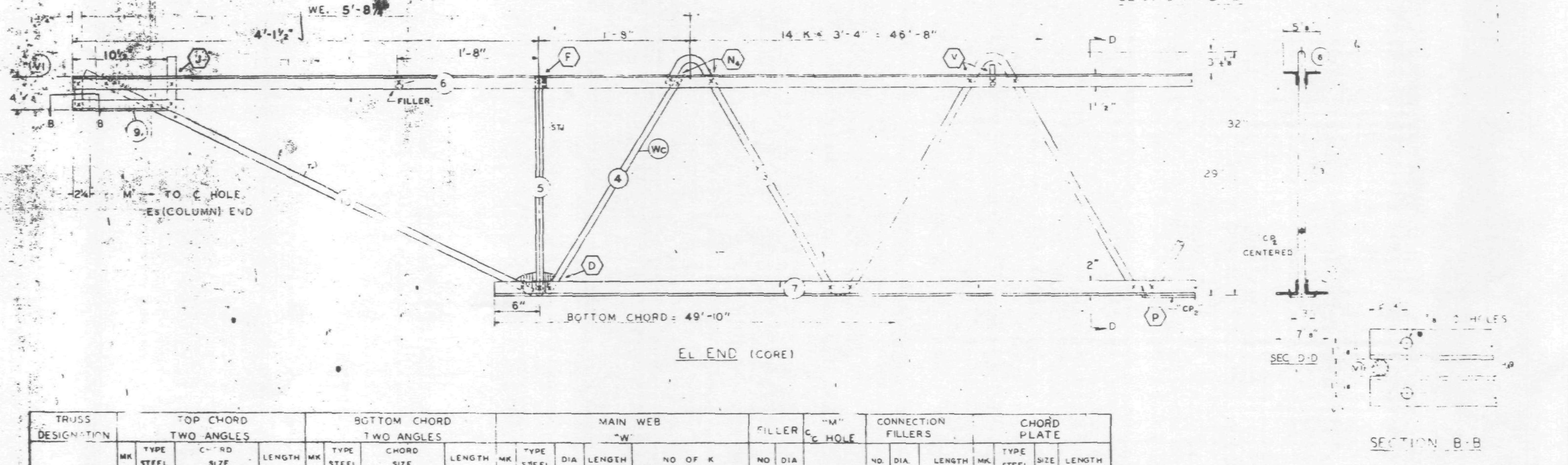

NO.	DATE	REVISION	BY

REF DRWGS

7-AB1-4	7-22-68
7-AB-52	2-15-68
7-AB1-53	7-22-68
7-AB4-50	8-1-68
7-AB3-2	1-3-66
7-AB4-50.5	10-20-67

PAINT
LACLEDE ELECTROCOAT
RED NO. 1000

TRUSS DESIGNATION	TOP CHORD TWO ANGLES				BOTTOM CHORD TWO ANGLES				MAIN WEB "W"					FILLER		"M" ℄ HOLE	CONNECTION FILLERS			CHORD PLATE			
	MK	TYPE STEEL	CHORD SIZE	LENGTH	MK	TYPE STEEL	CHORD SIZE	LENGTH	MK	TYPE STEEL	DIA	LENGTH	NO OF K	NO	DIA		NO.	DIA.	LENGTH	MK	TYPE STEEL	SIZE	LENGTH
C32T7H 588	6	A242	2"x1 1/2"x.31	58'-8"	7	A36	3"x2"x.33	49'-10"	3	A36	1.09	88'-1 1/4"	14 @ 3'-4" = 46'-8"	11	1.09	58'-2 3/4"	4	1.09"	3"	CP	A36	1/4x3	40'-0"

Es COLUMN END	TRUSS DESIGNATION	BEARING ANGLES				WE	DIAGONAL "T" STRUT				VERTICAL "ST" STRUT				END STIFFENER MK V1			END STIFFENER MK V3			DOUBLE STRUT			
		MK	TYPE STEEL	CHORD SIZE	LENGTH		MK	TYPE STEEL	DIA	LENGTH	MK	TYPE STEEL	DIA	LENGTH	TYPE STEEL	DIA	LENGTH	TYPE STEEL	DIA	LENGTH	MK	TYPE STEEL	DIA	LENGTH
	C32T7H 588	9	A242	2"x1 1/2"x.25	2'-8"	6'-1 1/4"	1	A36	1.09	6'-3 1/8"	2	A36	1.09	2'-4 7/8"	A36	1.09	4 3/8"	A36	1.09	2'-9 1/2"	DS1	A242	.92	6'-3 1/8"

CHECK DIMENSION FOR TRUSS FAB. LOCATION OF TRANS. TRUSS				
CL-1	CL-2	CL-3	CL-4	Fs
9'-6 1/2"	22'-10 1/2"	36'-2 1/2"	49'-6 1/2"	5'-2 1/2"

EL CORE END	TRUSS DESIGNATION	BEARING ANGLES				WE	DIAGONAL "T" STRUT				VERTICAL "ST" STRUT				END STIFFENER MK V1			END STIFFENER MK V2			END STIFFENER MK V4			WEB "Wc"					WEB "WT"				
		MK	TYPE STEEL	CHORD SIZE	LENGTH		MK	TYPE STEEL	DIA	LENGTH	MK	TYPE STEEL	DIA	LENGTH	TYPE STEEL	DIA	LENGTH	TYPE STEEL	DIA	LENGTH	TYPE STEEL	DIA	LENGTH	MK	TYPE STEEL	PCS	DIA	LENGTH	MK	TYPE STEEL	PCS	DIA	LENGTH
	C32T7H 588	9	A242	2"x1 1/2"x.25	1'-0 1/2"	5'-8 1/2"	10	A242	1.14	4'-7"	5	A242	1.14	2'-4 7/8"	A242	1.14	4 1/2"	A242	1.14	7 1/2"	—	—	—	4	A242	1	1.14	2'-	-	—	—	-	—

STEEL TRUSS DETAILS
FOR
WORLD TRADE CENTER N.Y.C.
FOR
THE PORT OF NEW YORK AUTHORITY

FLOOR TRUSS C32T7H 58'-8" OVERALL
WORLD TRADE CENTER TOWER A-B

FABRICATION BY LACLEDE STEEL COMPANY
FABRICATED AT MADISON
STD. DRAWING NO. 7-AB1-4 7-AB3-2
APPROVED FOR FABRICATION FOR CONTRA... James White DATE 4/25/69
DRAWN BY ... DATE APRIL 10, 1969
CHECKED BY T.M. CHUBA DATE APRIL 10, 1969
IN CHARGE OF PROD. DEV.
DETAILED BY LACLEDE STEEL CO.
FABRICATION CONTRACT NO. WTC 221
SHEET NO. ST207H

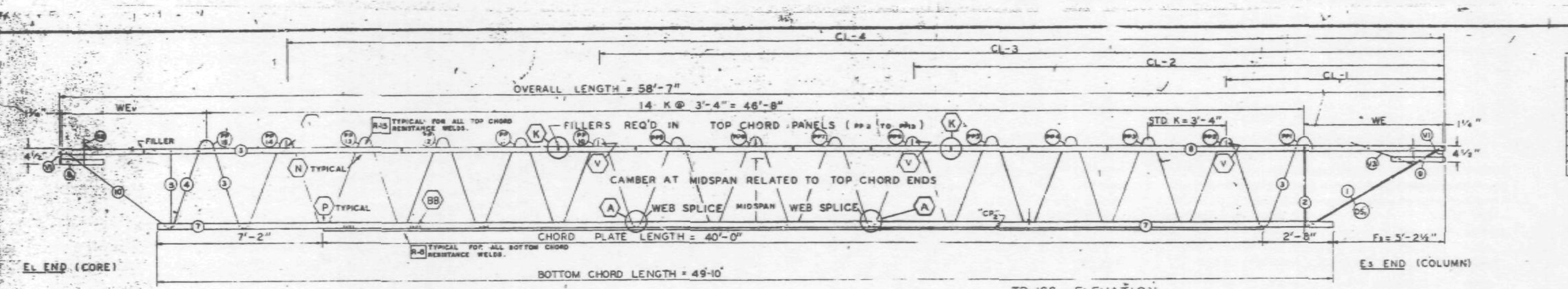

TRUSS ELEVATION

FABRICATION REQUIRMENTS	DESIGN	TOLERANCE
CAMBER AT MIDSPAN	2 1/16"	± 3/8"
DESIGN DEPTH	29"	± 1/4"
PANEL "K"	3'-4"	± 1/4"
OVERALL LENGTH	58'-7"	± 3/8"
WEB DEPTH	31 7/8"	± 1/4"

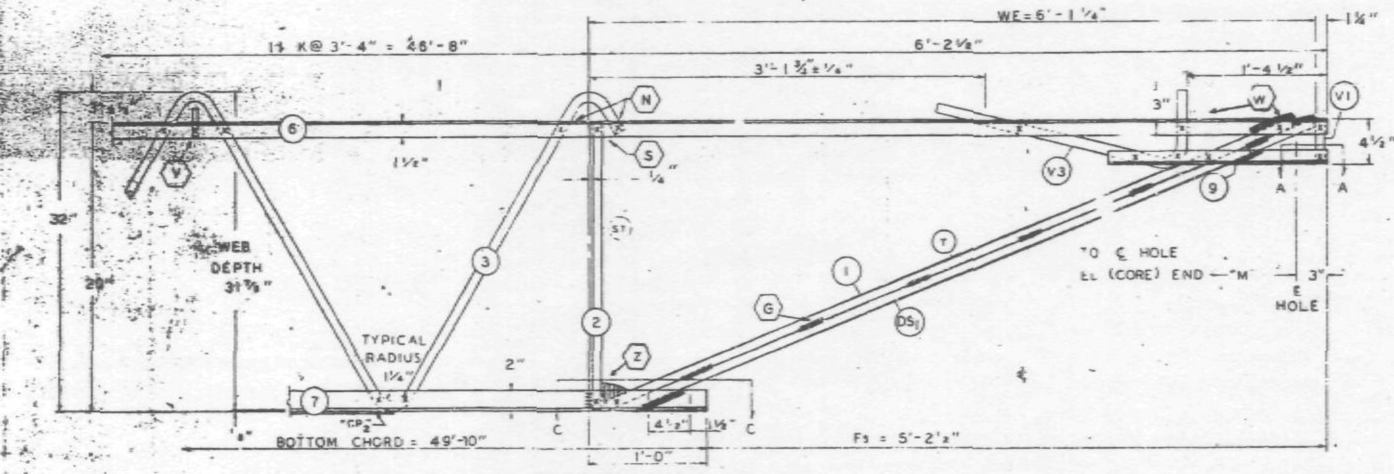

ES END (COLUMN)

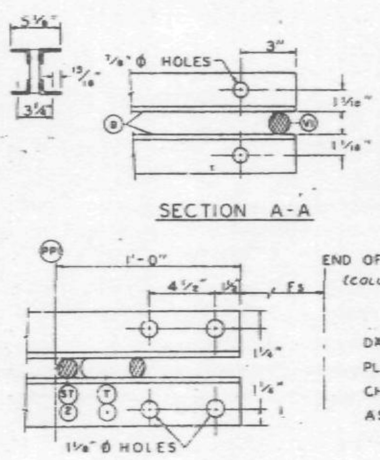

SECTION A-A

SECTION C-C

ALL PANEL POINTS RESISTANCE WELDED (x).
ARC WELDS INDICATED AT SHADED AREAS
AND AT BOTTOM CHORD WEB SPLICES (manual).
ALL WELD DETAILS SHOWN ON SHEETS ST290. ST291, ST292, ST293,
AND ST280.

CHORD PLATE DETAILS SHOWN ON SHEET ST280.
SEE SHEET ST295 FOR V1, V2, & V3 DETAILS.
LETTERS IN HEXAGON INDICATE WELD DETAIL, ie., (A).
LETTERS AND NUMBERS IN SQUARES INDICATE RESISTANCE WELD STRENGTH IDENTIFIED IN THE QUALITY CONTROL PROGRAM, ie., [R-6].

DAMPING UNIT CONNECTION
PLATE ATTACHED TO BOTTOM-
CHORD (COL END) IN FIELD.
ASSEMBLY BY CONTRACT WTC 223.00.

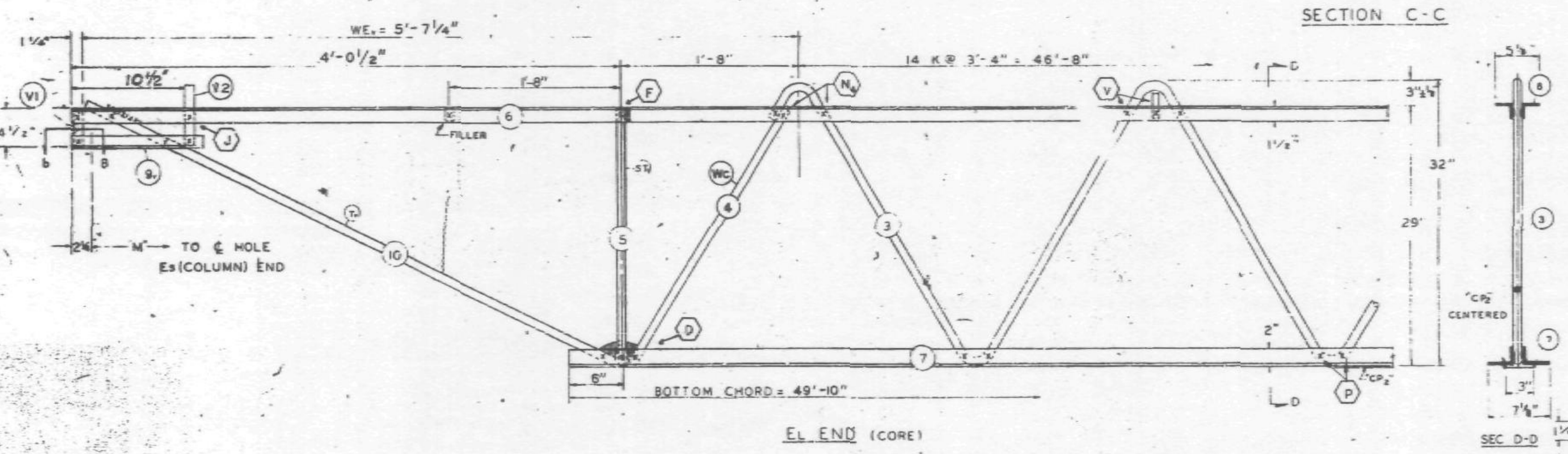

EL END (CORE)

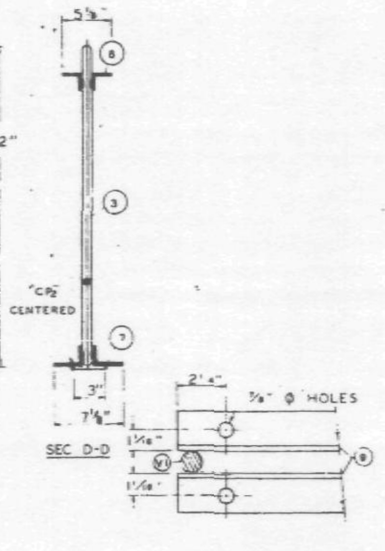

SEC D-D

SECTION B-B

NO.	DATE	REVISION	BY

REF DRWGS

7-AB1-4	7-22-68
7-AB1-52	2-15-68
7-AB1-53	7-22-68
7-AB4-50	8-1-68
7-AB3-2	1-3-68
7-AB4-50.5	10-20-67

PAINT
LACLEDE ELECTROCOAT
RED NO. 10001

TRUSS DESIGNATION	TOP CHORD TWO ANGLES				BOTTOM CHORD TWO ANGLES				MAIN WEB "W"					FILLER		"M" ℄ HOLE	CONNECTION FILLERS			CHORD PLATE			
	MK	TYPE STEEL	CHORD SIZE	LENGTH	MK	TYPE STEEL	CHORD SIZE	LENGTH	MK	TYPE STEEL	DIA	LENGTH	NO OF K	NO	DIA		NO	DIA	LENGTH	MK	TYPE STEEL	SIZE	LENGTH
C32T7J-587	6	A242	2"x1½"x.31	58'-7"	7	A36	3"x2"x.33	49'-10"	3	A36	1.09	88'-1¼"	14 @ 3'-4" = 46'-8"	11	1.09	58'-1 3/4"	4	1.09	3"	CP2	A36	¼x3	40'-0"

COLUMN END

ES END	TRUSS DESIGNATION	BEARING ANGLES				WE	DIAGONAL "T" STRUT				VERTICAL "ST" STRUT				END STIFFENER MK. V1			END STIFFENER MK. V3			DOUBLE STRUT			
		MK	TYPE STEEL	CHORD SIZE	LENGTH		MK	TYPE STEEL	DIA	LENGTH	MK	TYPE STEEL	DIA	LENGTH	TYPE STEEL	DIA	LENGTH	TYPE STEEL	DIA	LENGTH	MK	TYPE STEEL	DIA	LENGTH
	C32T7J-587	9	A242	2"x1½"x.25	2'-3"	6'-1¼"	1	A36	1.09	6'-3 3/8"	2	A36	1.09	2'-4 7/8"	A36	1.09	4 3/8"	A36	1.09	2'-9½"	DS1	A242	.92	6'-3 1/8"

CHECK DIMENSION FOR TRUSS FAB LOCATION OF TRANS TRUSS				
CL-1	CL-2	CL-3	CL-4	Fs
9'-6½"	22'-10½"	36'-2½"	49'-6½"	5'-2¼"

CORE END

EL END	TRUSS DESIGNATION	BEARING ANGLES				WE	DIAGONAL "T" STRUT				VERTICAL "ST" STRUT				END STIFFENER MK. V1			END STIFFENER MK. V2			END STIFFENER MK. V4			WEB "WC"					WEB "WT"				
		MK	TYPE STEEL	CHORD SIZE	LENGTH		MK	TYPE STEEL	DIA	LENGTH	MK	TYPE STEEL	DIA	LENGTH	TYPE STEEL	DIA	LENGTH	TYPE STEEL	DIA	LENGTH	TYPE STEEL	DIA	LENGTH	MK	TYPE STEEL	PCS	DIA	LENGTH	MK	TYPE STEEL	PCS	DIA	LENGTH
	C32T7J-587	9	A242	2"x1½"x.25	1'-0½"	5'-7½"	10	A242	1.14	4'-6 1/8"	5	A242	1.14	2'-4 7/8"	A242	1.14	4 3/8"	A242	1.14	7 3/8"	—	—	—	4	A242	1	1.14	2'-10"	—	—	—	—	—

STEEL TRUSS DETAILS
FOR
WORLD TRADE CENTER - N.Y.C.
FOR
THE PORT OF NEW YORK AUTHORITY

FLOOR TRUSS C32T7J 58'-7" OVERALL
WORLD TRADE CENTER TOWER A-B

FABRICATION BY LACLEDE STEEL COMPANY

FABRICATED AT MADISON, ILLINOIS	DESIGN DRAWING NO 7-AB1-4 7-AB3-2	PLATE
APPROVED FOR FABRICATION BY James White FOR PONYA DATE 1/29/69	DRAWN BY [illegible] DATE JAN. 7, 1969	
APPROVED FOR FABRICATION BY FOR FABRICATOR DATE	CHECKED BY T.M. CHURA DATE JAN. 7, 1969	IN CHARGE OF PROD DEV
DETAILED BY A.C. WEBER	FABRICATION CONT NO WTC 221	SHEET NO ST207J

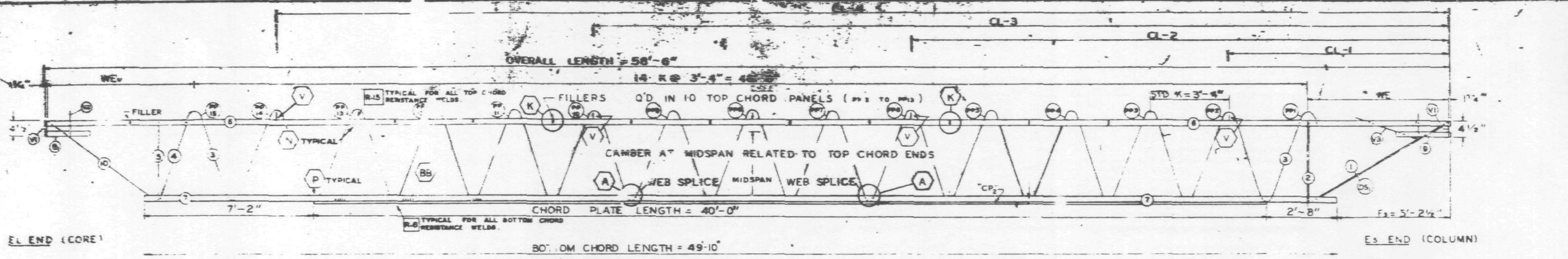

TRUSS ELEVATION

FABRICATION REQUIREMENTS		
CAMBER AT MIDSPAN	2⅛"	
DESIGN DEPTH	20"	⅛"
PANEL "K"	3'-4"	± 1/4"
OVERALL LENGTH	58'-6"	± 3/8"
WEB DEPTH	31 7/8"	± 1/

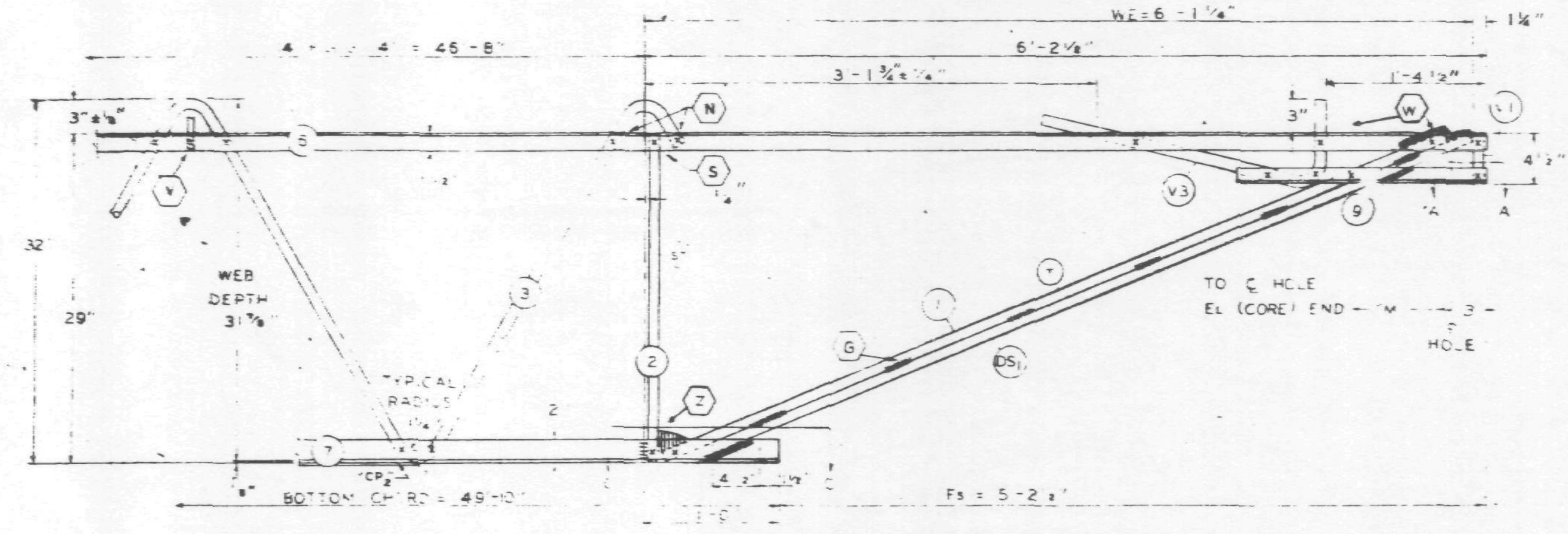

EL END (COLUMN)

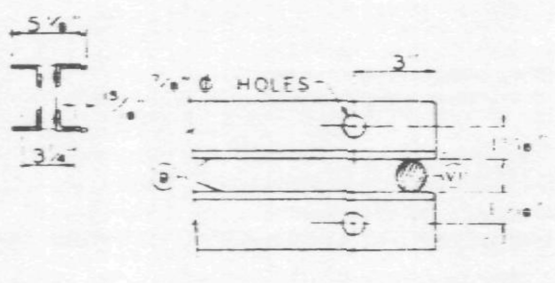

SECTION A-A

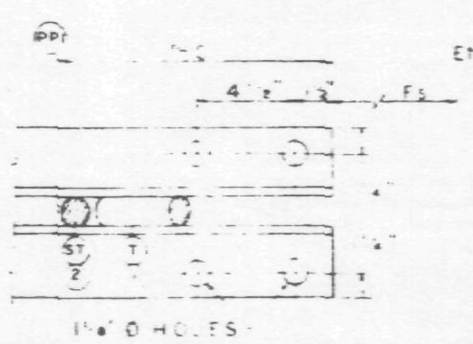

SECTION C-C

ALL PANEL POINTS RESISTANCE WELDED. ARC WELDS INDICATED AT SHADED AREAS AND AT BOTTOM CHORD WEB SPLICES.

ALL WELD DETAILS SHOWN ON SHEETS ST290, ST291, ST292, ST293. AND ST280.

CHORD PLATE DETAILS SHOWN ON SHEET ST280.
SEE SHEET ST295 FOR V1, V2, & V3 DETAILS.
LETTERS IN HEXAGON INDICATE WELD DETAIL, ie., (A).
LETTERS AND NUMBERS IN SQUARES INDICATE RESISTANCE WELD STRENGTH IDENTIFIED IN THE QUALITY CONTROL PROGRAM, ie., R-6.

DAMPING UNIT CONNECTION PLATE ATTACHED TO BOTTOM CHORD COL END IN FIELD ASSEMBLY BY CONTRACT WTC 223.00

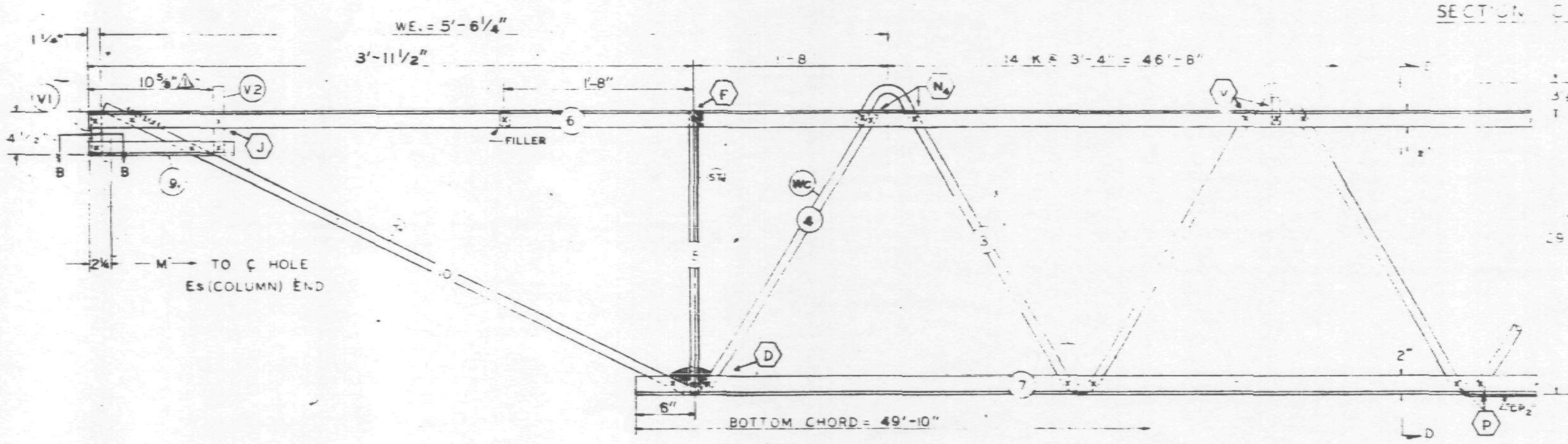

EL END (CORE)

SEC D-D

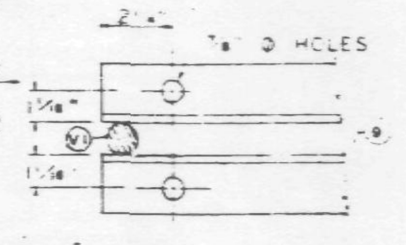

SECTION B-B

NO.	DATE	REVISION	BY
1	2-13-69	AS NOTED	R.JP

REF DRWGS

7-AB1-4	7-22-68
7-AB1-52	2-15-68
7-AB1-53	7-22-68
7-AB4-50	8-1-68
7-AB3-2	1-3-68
7-AB4-50 S	10-20-67

PAINT
LACLEDE ELECTROCOAT
RED NO. 1000

TRUSS DESIGNATION	TOP CHORD TWO ANGLES				BOTTOM CHORD TWO ANGLES				MAIN WEB "W"					FILLER		"M" C-C HOLE	CONNECTION FILLERS			CHORD PLATE			
	MK	TYPE STEEL	CHORD SIZE	LENGTH	MK	TYPE STEEL	CHORD SIZE	LENGTH	MK	TYPE STEEL	DIA	LENGTH	NO OF K	NO	DIA		NO	DIA	LENGTH	MK	TYPE STEEL	SIZE	LENGTH
C32T7K-586	6	A242	2"x1½"x.3	58'-6"	7	A36	3"x2"x.33	49'-10"	3	A36	1.09	88'-1¼"	14 @ 3'-4" = 46'-8"	1R	1.09	58-9¾	4	1.09	3"	CP2	A36	¼x3	40'-0"

COLUMN END

Es END	TRUSS DESIGNATION	BEARING ANGLES				WE	DIAGONAL "T" STRUT				VERTICAL "ST" STRUT				END STIFFENER MK V1			END STIFFENER MK V2			DOUBLE STRUT			
		MK	TYPE STEEL	CHORD SIZE	LENGTH		MK	TYPE STEEL	DIA	LENGTH	MK	TYPE STEEL	DIA	LENGTH	TYPE STEEL	DIA	LENGTH	TYPE STEEL	DIA	LENGTH	MK	TYPE STEEL	DIA	LENGTH
	C32T7K-586	9	A242	2"x1½"x.25	2'-3"	6'-1¼"	1	A36	1.09	6'-3⅞"	2	A36	1.09	2'-4⅜"	A36	1.09	4⅜"	A36	1.09	2-9	DS	A242	.92	6'-3¼"

CHECK DIMENSION FOR TRUSS FAB LOCATION OF TRANS TRUSS				
CL-1	CL-2	CL-3	CL-4	Fs
9'-6½"	22'-10½"	36'-2½"	49'-6½"	5'-2½"

CORE END

EL END	TRUSS DESIGNATION	BEARING ANGLES				WE	DIAGONAL "T" STRUT				VERTICAL "ST" STRUT				END STIFFENER MK V1			END STIFFENER MK V2			END STIFFENER MK V4			WEB "WC"					WEB "WT"				
		MK	TYPE STEEL	CHORD SIZE	LENGTH		MK	TYPE STEEL	DIA	LENGTH	MK	TYPE STEEL	DIA	LENGTH	TYPE STEEL	DIA	LENGTH	TYPE STEEL	DIA	LENGTH	TYPE STEEL	DIA	LENGTH	MK	TYPE STEEL	PCS	DIA	LENGTH	MK	TYPE STEEL	PCS	DIA	LENGTH
	C32T7K-586	9	A242	2"x1½"x.25	1'-0½"	5'-6¼"	10	A242	1.14	4'-5¼"	5	A242	1.14	2'-4⅜"	A242	1.14	4⅜"	A242	1.14	7⅜"	—	—	—	4	A242	1	1.14	2'-10"	-	—	—	—	—

STEEL TRUSS DETAILS
FOR
WORLD TRADE CENTER N.Y.C.
FOR
THE PORT OF NEW YORK AUTHORITY

FLOOR TRUSS C32T7K 58'-6" OVERALL
WORLD TRADE CENTER TOWER A-B

FABRICATION BY LACLEDE STEEL COMPANY

FABRICATED AT MADISON, ILLINOIS	DESIGN DRAWING NO 7-AB1-4 7-AB3-2	PLATE
APPROVED FOR FABRICATION BY FOR P.O.N.Y.A. DATE 2/28/69	DRAWN BY L.R. DATE JAN.7, 1969	
APPROVED FOR FABRICATION BY FOR FABRICATOR DATE LACLEDE STEEL CO.	CHECKED BY T.M.CHURA DATE JAN.7, 1969	IN CHARGE OF PROD DEPT
DETAILED BY A.C. WEBER	FABRICATION CONT NO WTC 221	SHEET NO ST207K

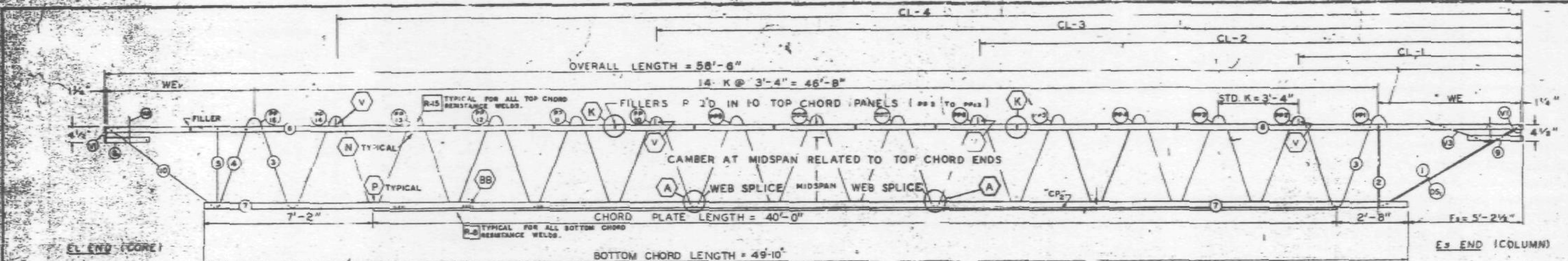

EL END (CORE) ES END (COLUMN)

TRUSS ELEVATION

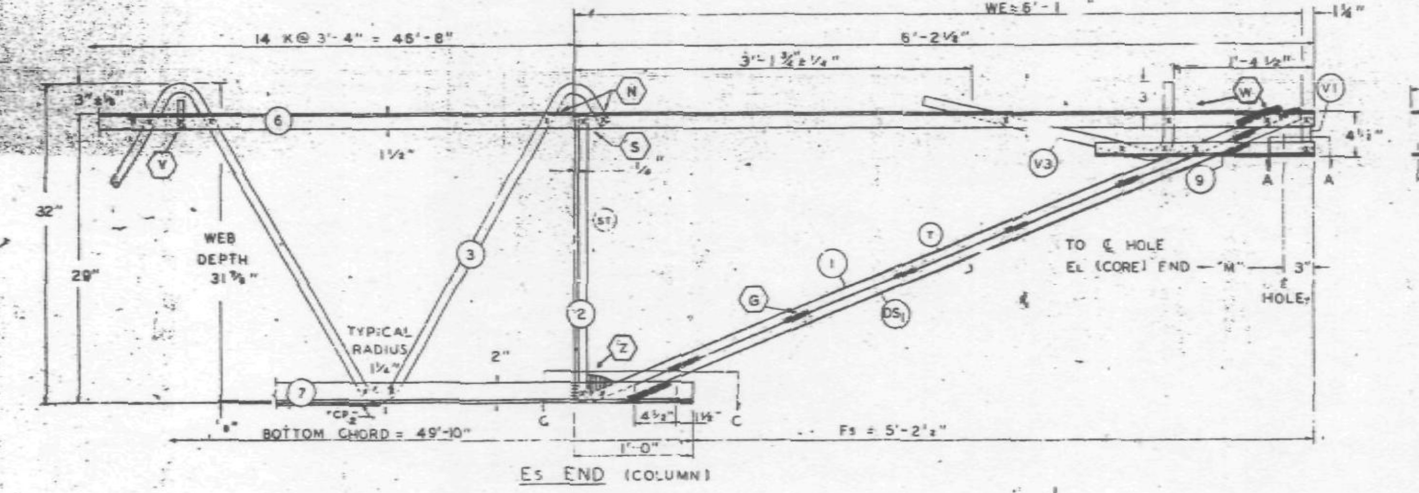

ES END (COLUMN)

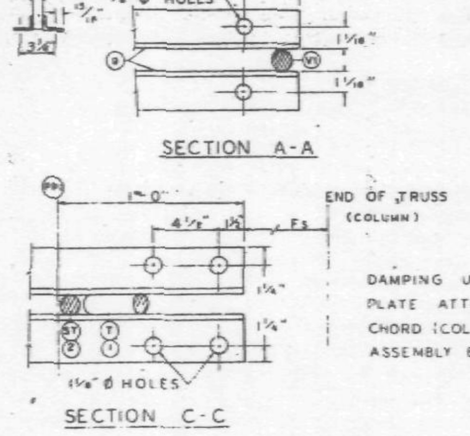

ALL PANEL POINTS RESISTANCE WELDED (x).
ARC WELDS INDICATED AT SHADED AREAS
AND AT BOTTOM CHORD WEB SPLICES.
ALL WELD DETAILS SHOWN ON SHEETS ST290, ST291, ST292, ST293,
AND ST280.

CHORD PLATE DETAILS SHOWN ON SHEET ST280.
SEE SHEET ST295 FOR V1, V2, & V3 DETAILS.
LETTERS IN HEXAGON INDICATE WELD DETAIL, ie., (A).
LETTERS AND NUMBERS IN SQUARES INDICATE RESISTANCE WELD STRENGTH IDENTIFIED IN THE QUALITY CONTROL PROGRAM, ie., [R-6].

DAMPING UNIT CONNECTION
PLATE ATTACHED TO BOTTOM
CHORD (COL END) IN FIELD
ASSEMBLY BY CONTRACT WTC 223.00.

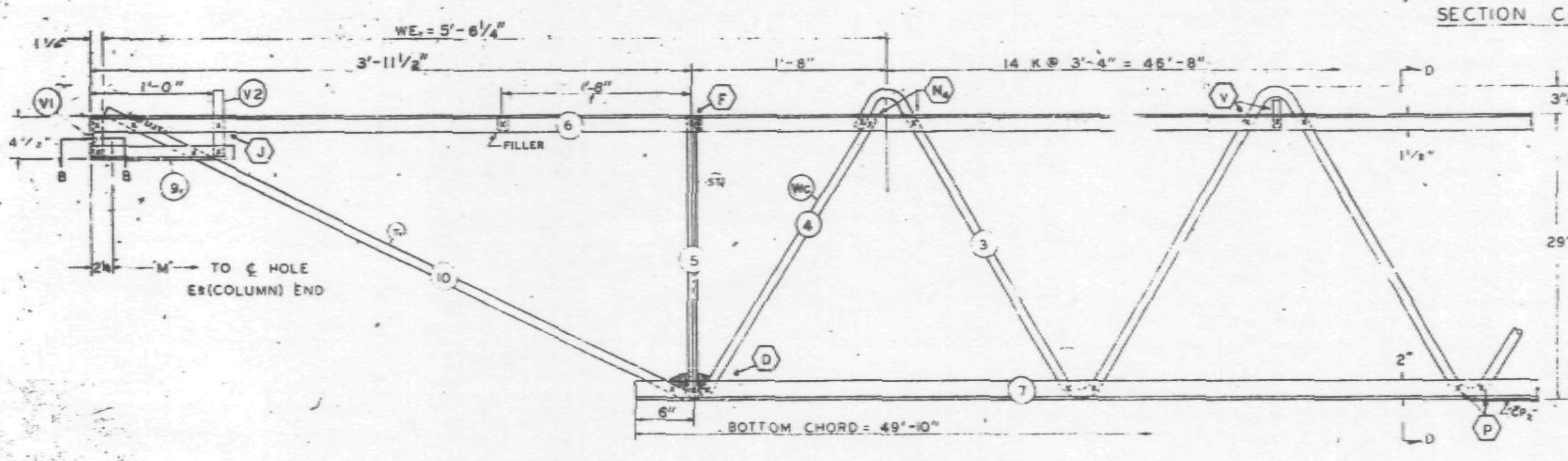

EL END (CORE)

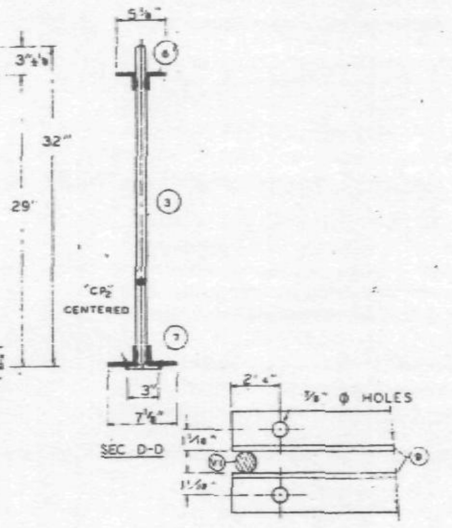

SECTION B-B

FABRICATION REQUIRMENTS	DESIGN	TOLERANCE
CAMBER AT MIDSPAN	2⅛"	± 3/8"
DESIGN DEPTH	29"	± 1/4"
PANEL "K"	3'-4"	± 1/4"
OVERALL LENGTH	58'-6"	± 3/8"
WEB DEPTH	31 7/8"	± 1/4"

NO.	DATE	REVISION	BY

REF DRWGS

7-AB1-4	7-28-66
7-AB1-52	2-15-68
7-AB1-53	7-22-68
7-AB4-50	8-1-68
7-AB3-2	1-3-69
7-AB4-50.5	10-20-67

PAINT
LACLEDE ELECTROCOAT
RED NO. 10001

TRUSS DESIGNATION	TOP CHORD TWO ANGLES				BOTTOM CHORD TWO ANGLES				MAIN WEB "W"					FILLER		"M" ℄ HOLE	CONNECTION FILLERS			CHORD PLATE			
	MK.	TYPE STEEL	CHORD SIZE	LENGTH	MK	TYPE STEEL	CHORD SIZE	LENGTH	MK.	TYPE STEEL	DIA.	LENGTH	NO. OF K	NO.	DIA.		NO.	DIA.	LENGTH	MK.	TYPE STEEL	SIZE	LENGTH
C32T7K-586	6	A242	2"x1½"x.31	58'-6"	7	A36	3"x2"x.33	49'-10"	3	A36	1.09	88'-1¼"	14 @ 3'-4" = 46'-8"	1R	1.09	58'-9¾"	4	1.09	3"	CP2	A36	¼x3	40'-0"

COLUMN END

ES END	TRUSS DESIGNATION	BEARING ANGLES				WE	DIAGONAL "T" STRUT				VERTICAL "ST" STRUT				END STIFFENER MK. V1			END STIFFENER MK. V3			DOUBLE STRUT			
		MK.	TYPE STEEL	CHORD SIZE	LENGTH		MK.	TYPE STEEL	DIA.	LENGTH	MK.	TYPE STEEL	DIA.	LENGTH	TYPE STEEL	DIA.	LENGTH	TYPE STEEL	DIA.	LENGTH	MK.	TYPE STEEL	DIA.	LENGTH
	C32T7K-586	9	A242	2"x1½"x.25	2'-3"	6'-1¼"	1	A36	1.09	6'-3⅞"	2	A36	1.09	2'-4⅞"	A36	1.09	4⅝"	A36	1.09	2'-9½"	DS1	A242	.92	6'-3⅞"

CHECK DIMENSION FOR TRUSS FAB

LOCATION OF TRANS. TRUSS				
CL-1	CL-2	CL-3	CL-4	Fs
9'-6½"	22'-10½"	36'-2½"	49'-6½"	5'-2½"

CORE END

EL END	TRUSS DESIGNATION	BEARING ANGLES				WE.	DIAGONAL "T" STRUT				VERTICAL "ST" STRUT				END STIFFENER MK. V1			END STIFFENER MK. V2			END STIFFENER MK. V4			WEB "WC"					WEB "WT"				
		MK.	TYPE STEEL	CHORD SIZE	LENGTH		MK.	TYPE STEEL	DIA.	LENGTH	MK.	TYPE STEEL	DIA.	LENGTH	TYPE STEEL	DIA.	LENGTH	TYPE STEEL	DIA.	LENGTH	TYPE STEEL	DIA.	LENGTH	MK.	TYPE STEEL	PCS	DIA.	LENGTH	MK.	TYPE STEEL	PCS	DIA.	LENGTH
	C32T7K-586	9	A242	2"x1½"x.25	1'-0½"	5'-6¼"	10	A242	1.14	4'-5¼"	5	A242	1.14	2'-4⅞"	A242	1.14	4⅜"	A242	1.14	7⅞"	—	—	—	4	A242	1	1.14	2'-10"	-	—	—	—	—

STEEL TRUSS DETAILS
FOR
WORLD TRADE CENTER - NYC
FOR
THE PORT OF NEW YORK AUTHORITY

FLOOR TRUSS C32T7K 58'-6" OVERALL
WORLD TRADE CENTER TOWER A-B

FABRICATION BY LACLEDE STEEL COMPANY

FABRICATED AT MADISON, ILLINOIS	DESIGN DRAWING NO. 7-AB1-4 7-AB3-2 PLATE
APPROVED FOR FABRICATION James White FOR PONYA DATE 1/29/69	DRAWN BY — DATE JAN. 7, 1969
APPROVED FOR FABRICATION BY FOR FABRICATOR DATE	CHECKED BY T.M. CHURA DATE JAN. 7, 1969 — IN CHARGE OF PROD. DEV.
LACLEDE STEEL CO. DETAILED BY A.C. WEBER	FABRICATION CONT. NO. WTC 221 — SHEET NO. ST257K

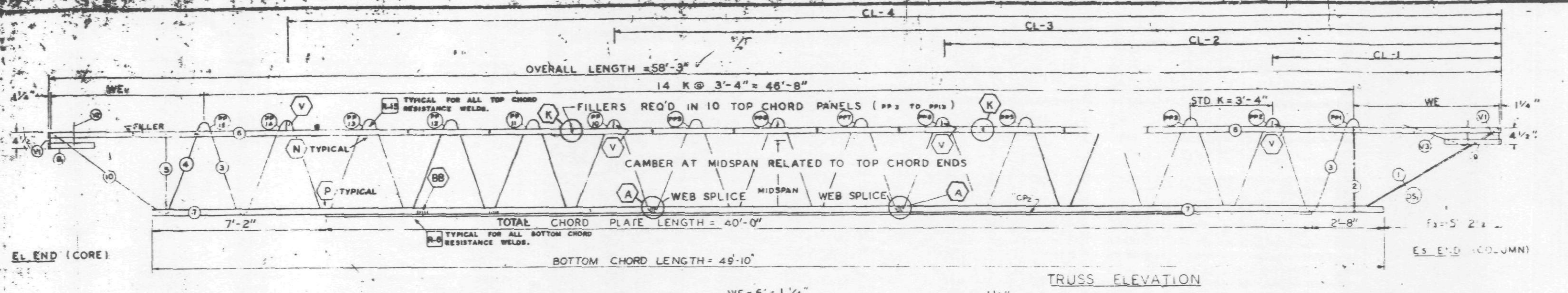

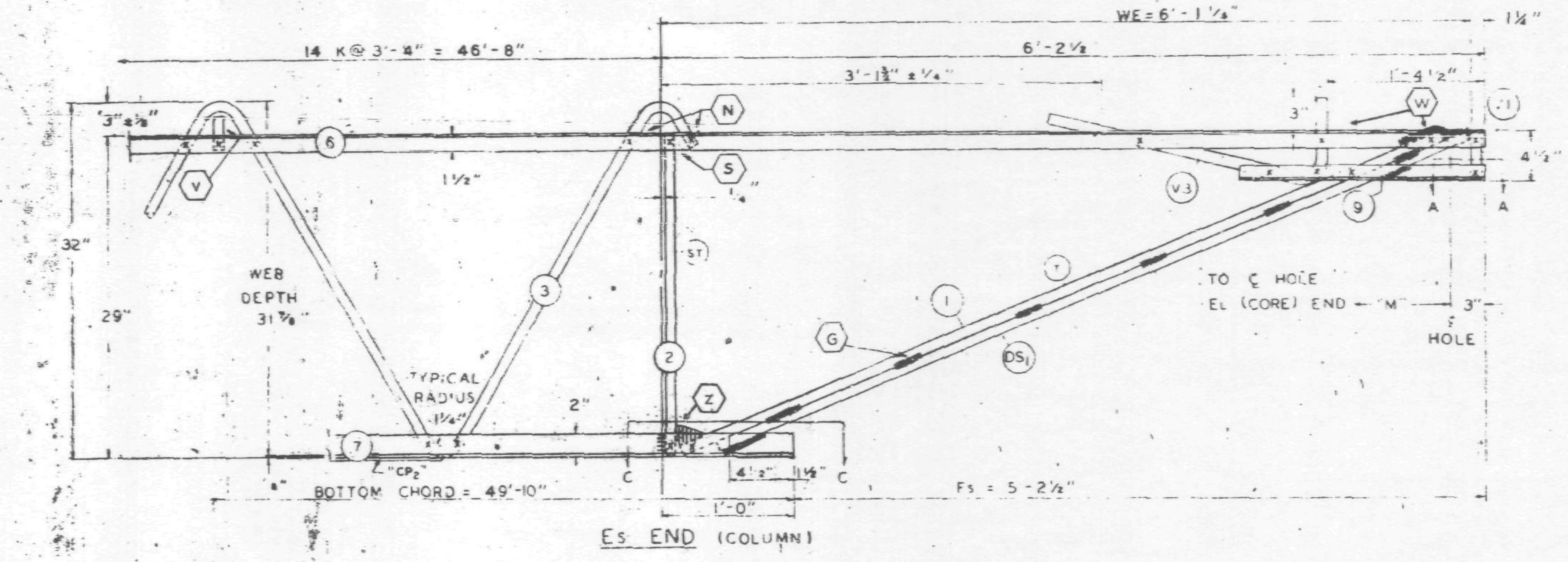

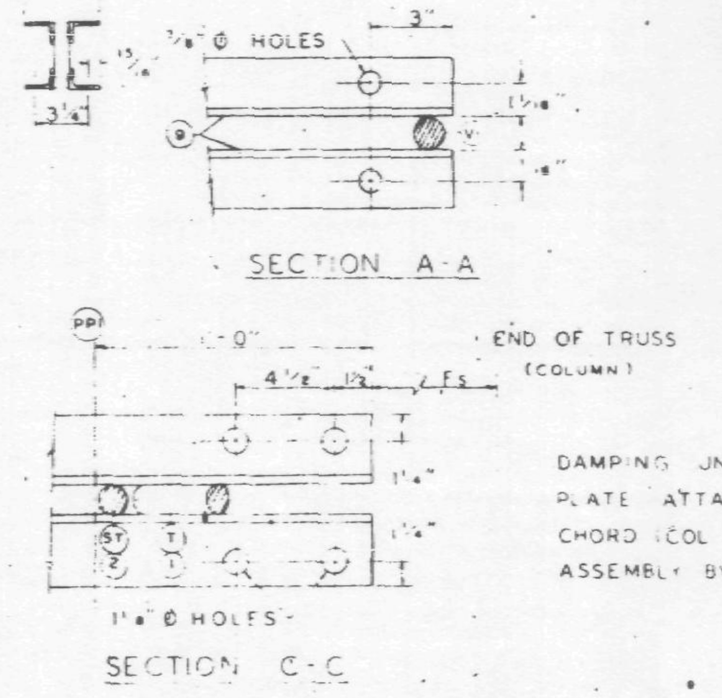

ALL PANEL POINTS RESISTANCE WELDED (x).
ARC WELDS INDICATED AT SHADED AREAS
AND AT BOTTOM CHORD WEB SPLICES (////).
ALL WELD DETAILS SHOWN ON SHEETS ST290, ST291, ST292, ST293
AND ST280

CHORD PLATE DETAILS SHOWN ON SHEET ST280.
SEE SHEET ST295 FOR V1, V2, & V3 DETAILS.
LETTERS IN HEXAGON INDICATE WELD DETAIL, ie., A.
LETTERS AND NUMBERS IN SQUARES INDICATE RESISTANCE WELD STRENGTH IDENTIFIED IN THE QUALITY CONTROL PROGRAM, ie., R-6.

DAMPING UNIT CONNECTION PLATE ATTACHED TO BOTTOM CHORD (COL END) IN FIELD ASSEMBLY BY CONTRACT WTC 223.00.

FABRICATION REQUIRMENTS	DESIGN	TOLERANCE
CAMBER AT MIDSPAN	2 1/16"	± 3/8"
DESIGN DEPTH	33"	± 1/4"
PANEL "K"	3'-4"	± 1/4"
OVERALL LENGTH	58'-3"	± 3/8"
WEB DEPTH	31 7/8"	± 1/4"

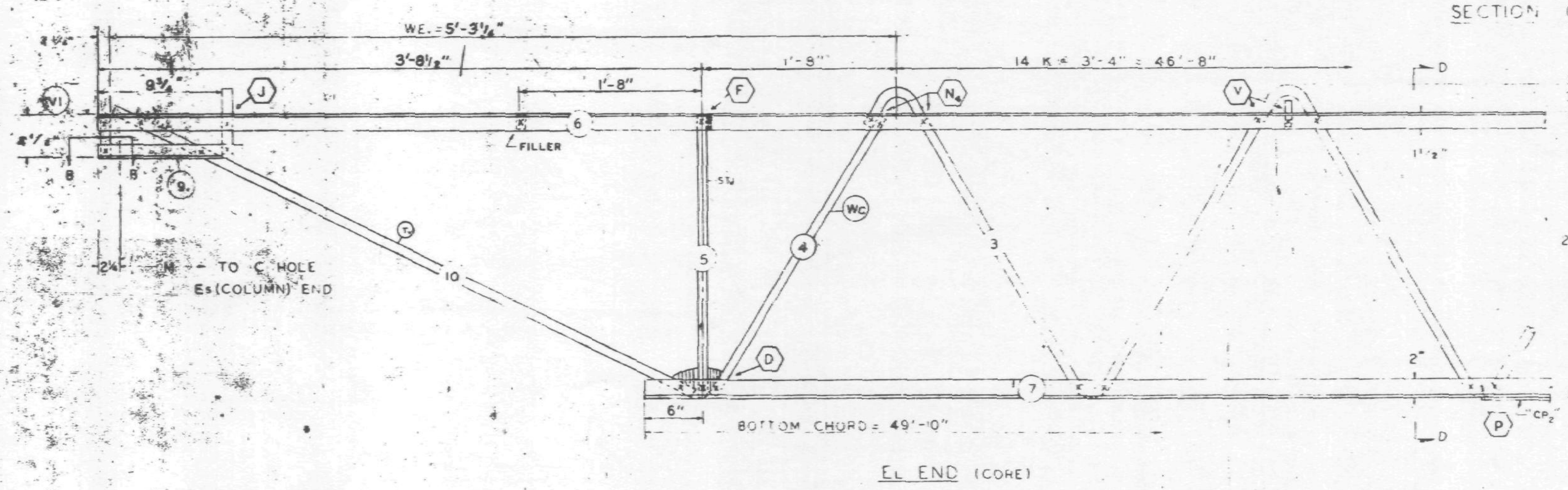

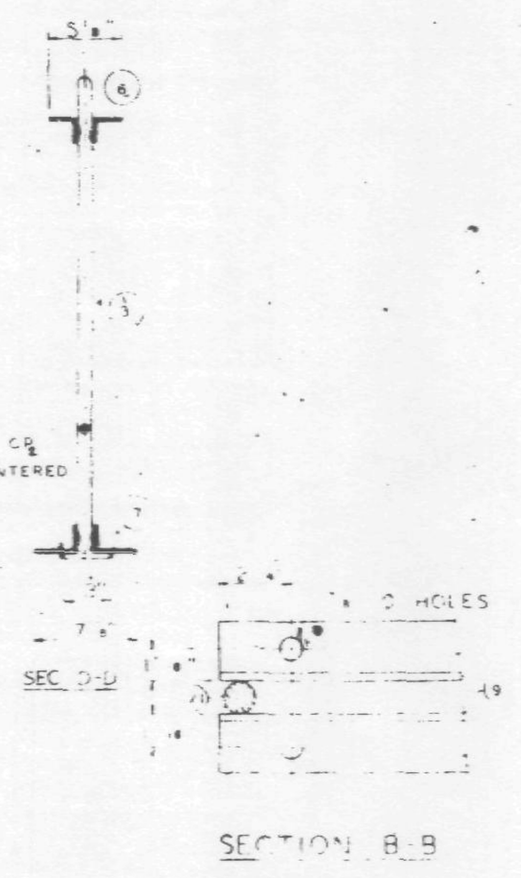

NO.	DATE	REVISION	BY

REF DRWGS

7-AB1-4	7-22-68
7-AB1-52	2-15-68
7-AB1-53	7-22-68
7-AB4-50	8-1-68
7-AB3-2	1-3-68
7-AB4-50 5	10-20-67

PAINT
LACLEDE ELECTRICOAT
RED NO. 1000.

TRUSS DESIGNATION	TOP CHORD TWO ANGLES MK	TYPE STEEL	CHORD SIZE	LENGTH	BOTTOM CHORD TWO ANGLES MK	TYPE STEEL	CHORD SIZE	LENGTH	MAIN WEB "W" MK	TYPE STEEL	DIA	LENGTH	NO OF K	FILLER NO	DIA	"M" C-C HOLE	CONNECTION FILLERS NO.	DIA.	LENGTH	CHORD PLATE MK	TYPE STEEL	SIZE	LENGTH
C32T7M 583	6	A242	2"x1 1/2"x 31	58'-3"	7	A36	3"x2"x 33	49'-10"	3	A36	1.09	88'-1 1/4"	14 @ 3'-4" = 46'-8"	11	1.09	57'-9 3/4"	4	1.09"	3"	CP	A36	1/4x3	40'-0"

COLUMN END

Es	TRUSS DESIGNATION	BEARING ANGLES MK	TYPE STEEL	CHORD SIZE	LENGTH	WE	DIAGONAL "T" STRUT MK	TYPE STEEL	DIA	LENGTH	VERTICAL "ST" STRUT MK	TYPE STEEL	DIA	LENGTH	END STIFFENER MK. V1 TYPE STEEL	DIA	LENGTH	MK. V3 TYPE STEEL	DIA	LENGTH	DOUBLE STRUT MK	TYPE STEEL	DIA	LENGTH
	C32T7M 583	9	A242	2"x1 1/2"x 25	2'-3"	6'-1 1/4"	1	A36	1.09	6'-3 1/8"	2	A36	1.09	2'-4 7/8"	A36	1.09	4 3/8"	A36	1.09	2'-9 1/2"	DS1	A242	.92	6'-3 1/8"

CHECK DIMENSION FOR TRUSS FAB. LOCATION OF TRANS TRUSS

CL-1	CL-2	CL-3	CL-4	Fs
9'-6 1/2"	22'-10 1/2"	36'-2 1/2"	49'-6 1/2"	5'-2 1/2"

CORE END

EL END	TRUSS DESIGNATION	BEARING ANGLES MK	TYPE STEEL	CHORD SIZE	LENGTH	WE	DIAGONAL "T" STRUT MK	TYPE STEEL	DIA	LENGTH	VERTICAL "ST" STRUT MK	TYPE STEEL	DIA.	LENGTH	END STIFFENER MK. V1 TYPE STEEL	DIA	LENGTH	MK. V2 TYPE STEEL	DIA.	LENGTH	MK. V4 TYPE STEEL	DIA.	LENGTH	WEB "Wc" MK	TYPE STEEL	PCS	DIA	LENGTH	WEB "WT" MK	TYPE STEEL	PCS	DIA.	LENGTH
	C32T7M 583	9	A242	2"x1 1/2"x 25	1'-0"	5'-3 1/4"	10	A242	1.14	4'-2 3/4"	5	A242	1.14	2'-4 7/8"	A242	1.14	4 3/8"	A242	1.14	7 3/8"	—	—	—	4	A242	1	1.14	2'-	-	—	—	—	—

STEEL TRUSS DETAILS
FOR
WORLD TRADE CENTER N.Y.C.
FOR
PORT OF NEW YORK AUTHORITY

FLOOR TRUSS C32T7M 58'-3" OVERALL
WORLD TRADE CENTER TOWER A-8

FABRICATION BY LACLEDE STEEL COMPANY

DESIGN DRAWING NO. 7-AB1-4 7-AB3-2
James White 4/25/69
DRAWN BY APRIL 11, 1969
M CHIRA APRIL 11, 1969
IN CHARGE OF
SHEET NO.
DETAILED BY
WT. 221
ST207M

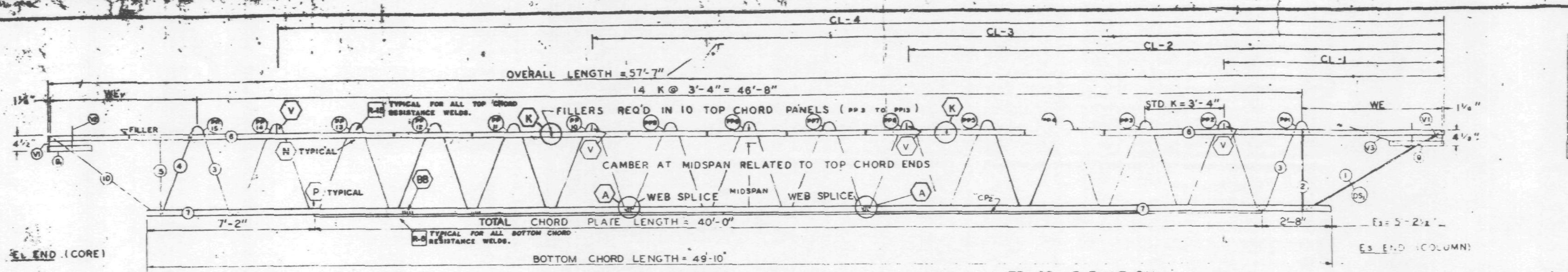

TRUSS ELEVATION

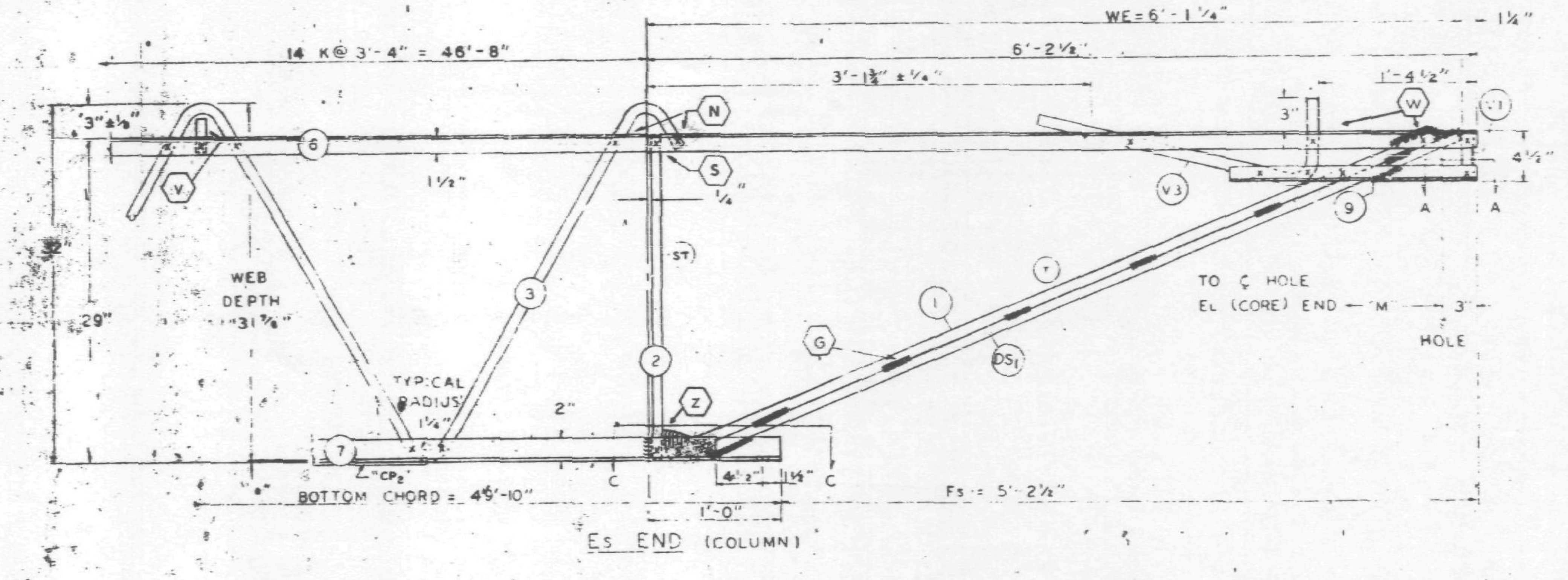

Es END (COLUMN)

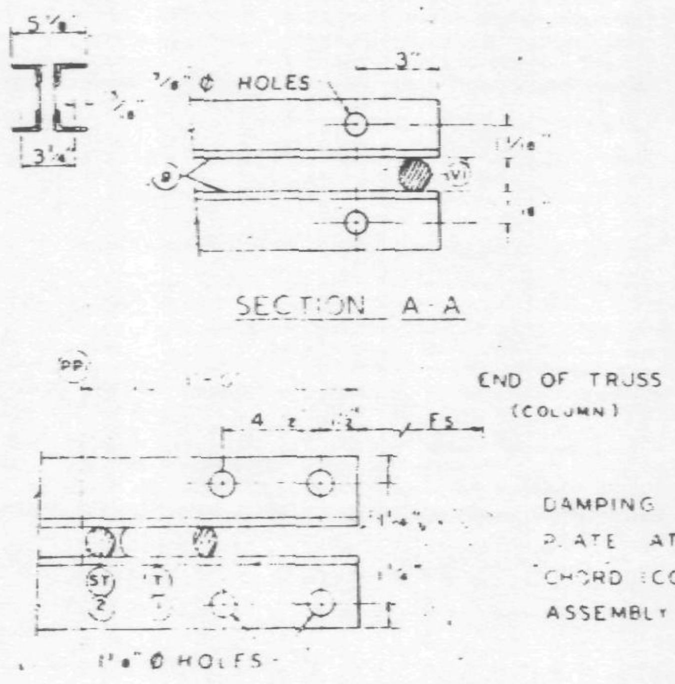

ALL PANEL POINTS RESISTANCE WELDED (x).
ARC WELDS INDICATED AT SHADED AREAS
AND AT BOTTOM CHORD WEB SPLICES.
ALL WELD DETAILS SHOWN ON SHEETS ST290, ST291, ST292, ST293
AND ST280.

CHORD PLATE DETAILS SHOWN ON SHEET ST280.
SEE SHEET ST295 FOR V1, V2, & V3 DETAILS.
LETTERS IN HEXAGON INDICATE WELD DETAIL, ie., A.
LETTERS AND NUMBERS IN SQUARES INDICATE RESISTANCE WELD STRENGTH IDENTIFIED IN THE QUALITY CONTROL PROGRAM, ie., R-6.

DAMPING UNIT CONNECTION
PLATE ATTACHED TO BOTTOM
CHORD (COL END) IN FIELD
ASSEMBLY BY CONTRACT WTC 223.00.

FABRICATION REQUIREMENTS

	DESIGN	TOLERANCE
CAMBER AT MIDSPAN	2½"	[illegible]
DESIGN DEPTH	29"	[illegible]
PANEL "K"	3'-4"	± 1/4"
OVERALL LENGTH	57'-7"	± 3/8"
WEB DEPTH	31 7/8"	± 1/4"

TISHMAN
CONSTRUCTION

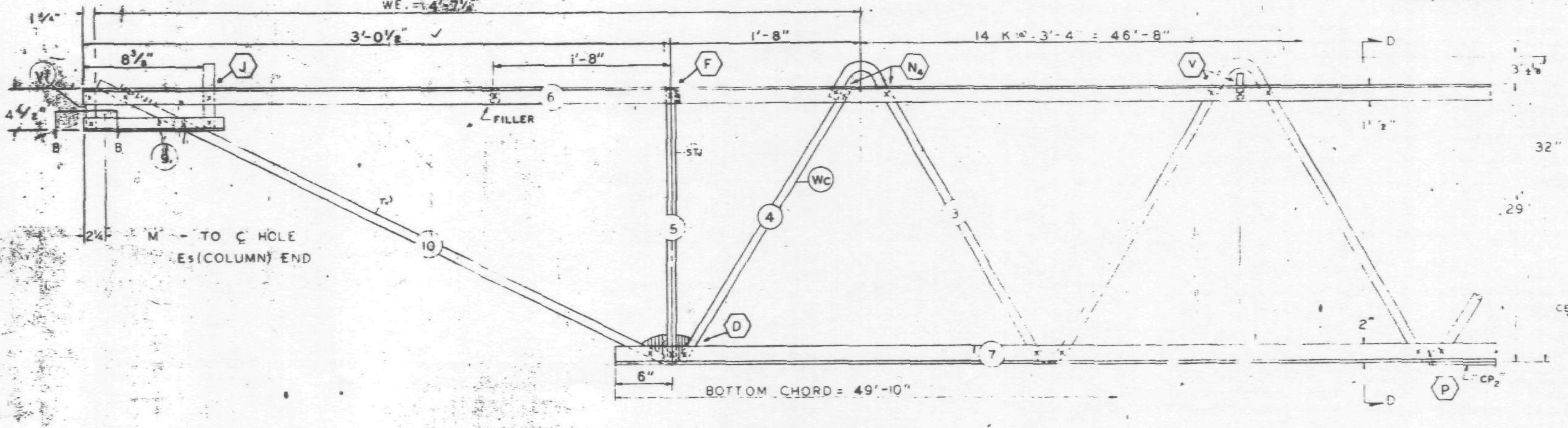

El END (CORE)

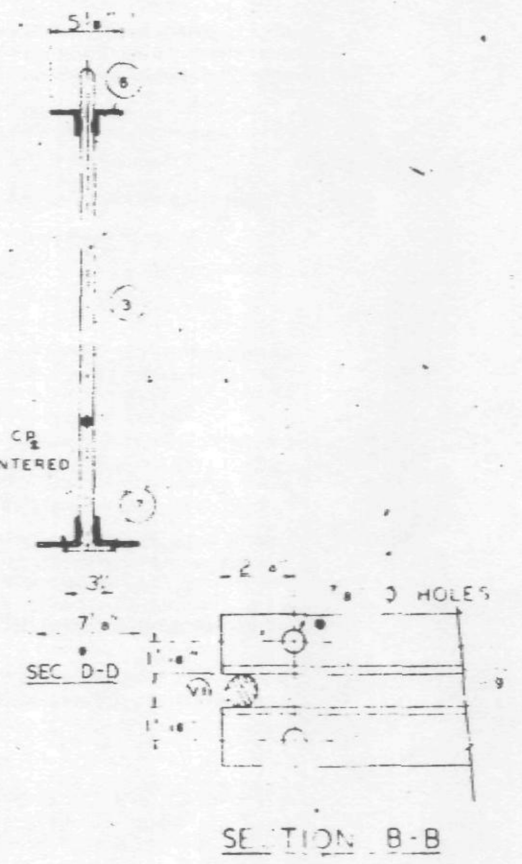

NO.	DATE	REVISION	BY

REF DRWGS

7-AB1-4	7-22-68
7-AB1-52	2-15-68
7-AB1-53	7-22-68
7-AB4 50	8-1-68
7-AB3-2	1-31-68
7-AB4-50.5	10-20-67

PAINT
LACLEDE ELECTROCOAT
RED NO 10001

TRUSS DESIGNATION	TOP CHORD TWO ANGLES				BOTTOM CHORD TWO ANGLES				MAIN WEB "W"					FILLER		"M" ℄ HOLE	CONNECTION FILLERS			CHORD PLATE			
	MK	TYPE STEEL	CHORD SIZE	LENGTH	MK	TYPE STEEL	CHORD SIZE	LENGTH	MK	TYPE STEEL	DIA	LENGTH	NO OF K	NO.	DIA		NO.	DIA.	LENGTH	MK	TYPE STEEL	SIZE	LENGTH
C32T 577	6	A242	2"x1½"x.31	57'-7"	7	A36	3"x2"x.33	49'-10"	3	A36	1.09	88'-1¼"	14 @ 3'-4" = 46'-8"	11	1.09	57'-1¾"	4	1.09"	3"	CP2	A36	¼x3	40'-0"

Es END	TRUSS DESIGNATION	BEARING ANGLES				WE	DIAGONAL "T" STRUT				VERTICAL "ST" STRUT				END STIFFENER MK. V1			END STIFFENER MK. V3			DOUBLE STRUT			
		MK	TYPE STEEL	CHORD SIZE	LENGTH		MK	TYPE STEEL	DIA	LENGTH	MK	TYPE STEEL	DIA	LENGTH	TYPE STEEL	DIA	LENGTH	TYPE STEEL	DIA	LENGTH	MK	TYPE STEEL	DIA	LENGTH
	C32T7P 577	9	A242	2"x1½"x.25	2'-3"	6'-1¼"	1	A36	1.09	6'-3⅛"	2	A36	1.09	2'-4⅞"	A36	1.09	4⅜"	A36	1.09	2'-9½"	DS1	A242	.92	6'-3⅛"

CHECK DIMENSION FOR TRUSS FAB.

LOCATION OF TRANS. TRUSS				
CL-1	CL-2	CL-3	CL-4	Fs
9'-6½"	22'-10½"	36'-2½"	49'-6½"	5'-2½"

TRUSS DESIGNATION	BEARING ANGLES				WE	DIAGONAL "T" STRUT				VERTICAL "ST" STRUT				END STIFFENER MK. V1			END STIFFENER MK. V2			END STIFFENER MK. V4			WEB "Wc"					WEB "WT"				
	MK	TYPE STEEL	CHORD SIZE	LENGTH		MK	TYPE STEEL	DIA	LENGTH	MK	TYPE STEEL	DIA	LENGTH	TYPE STEEL	DIA	LENGTH	TYPE STEEL	DIA	LENGTH	TYPE STEEL	DIA	LENGTH	MK	TYPE STEEL	PCS	DIA	LENGTH	MK	TYPE STEEL	PCS	DIA	LENGTH
C32T 577	9	A242	2"x1½"x.25	10¼"	4'-7½"	10	A242	1.14	3'-8½"	5	A242	1.14	2'-4⅞"	A242	1.14	4⅜"	A242	1.14	7⅜"	—	—	—	4	A242	1	1.14	2'-10"	-	—	—	—	—

STEEL TRUSS DETAILS
FOR
WORLD TRADE CENTER - N.Y.C.
FOR
THE PORT OF NEW YORK AUTHORITY

FLOOR TRUSS C32T7P 57'-7" OVERALL
WORLD TRADE CENTER TOWER A-B

FABRICATION BY LACLEDE STEEL COMPANY

FABRICATED AT MADISON, ILLINOIS		DESIGN DRAWING NO 7-AB1-4 7-AB3-2	PLATE
APPROVED FOR FABRICATION FOR PONYA James White	DATE 4/25/69	DRAWN BY DATE APRIL 15, 1969	
APPROVED FOR FABRICATION BY FOR FABRICATOR	DATE	CHECKED BY T.M. CHURA DATE APRIL 15, 1969	IN CHARGE OF PROD. DEV.
LACLEDE STEEL CO. DETAILED BY A. C. WEGE		FABRICATION CONT NO W.T.C. 221	SHEET NO ST207P

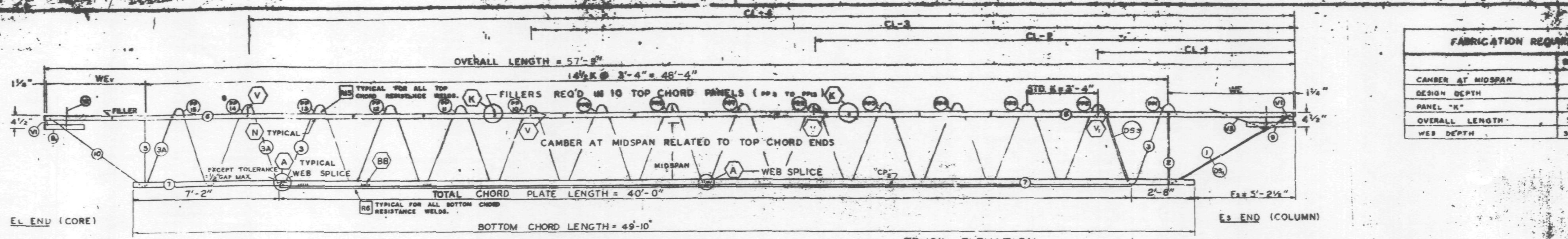

TRUSS ELEVATION

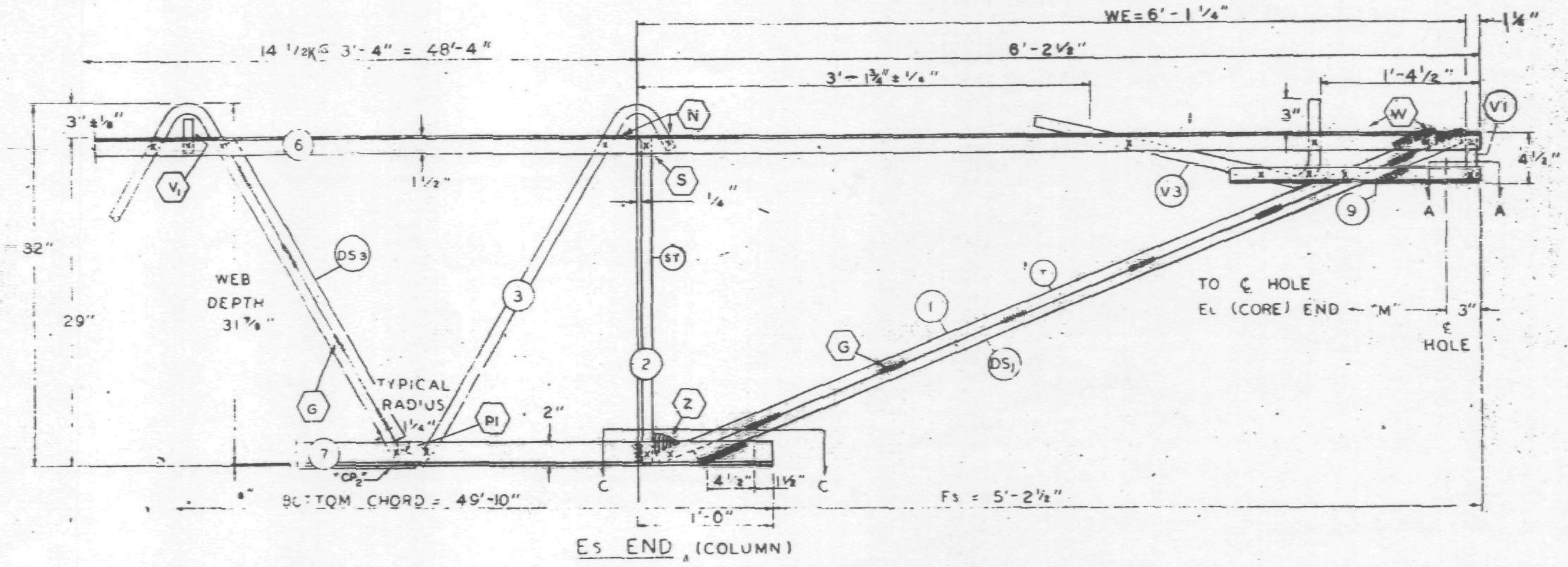

Es END (COLUMN)

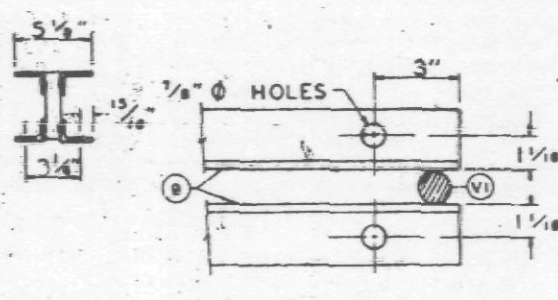

SECTION A-A

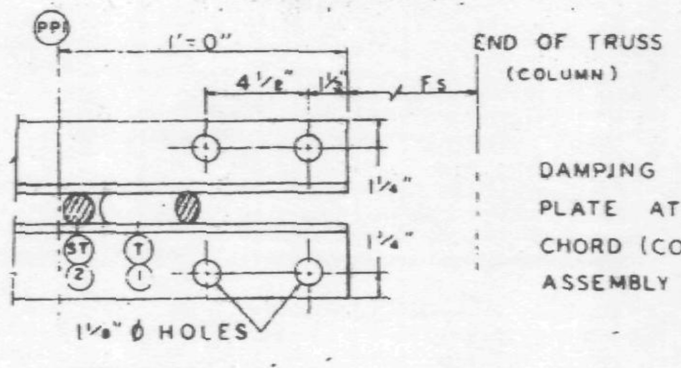

SECTION C-C

ALL PANEL POINTS RESISTANCE WELDED (x).
ARC WELDS INDICATED AT SHADED AREAS
AND AT BOTTOM CHORD WEB SPLICES (▬).
ALL WELD DETAILS SHOWN ON SHEETS ST290, ST291, ST292, AND ST280.

CHORD PLATE DETAILS SHOWN ON SHEET ST280.
SEE SHEET ST295 FOR V1, V2, & V3 DETAILS.
LETTERS IN HEXAGON INDICATE WELD DETAIL, ie., (A).
LETTERS AND NUMBERS IN SQUARES INDICATE RESISTANCE WELD STRENGTH IDENTIFIED IN THE QUALITY CONTROL PROGRAM, ie., R6.

DAMPING UNIT CONNECTION PLATE ATTACHED TO BOTTOM CHORD (COL END) IN FIELD. ASSEMBLY BY CONTRACT WTC 223.00.

FABRICATION REQUIREMENTS	DESIGN	[illegible]
CAMBER AT MIDSPAN	2"	[illegible]
DESIGN DEPTH	32"	[illegible]
PANEL "K"	3'-4"	[illegible]
OVERALL LENGTH	57'-9"	[illegible]
WEB DEPTH	31 7/8"	[illegible]

V0.1D

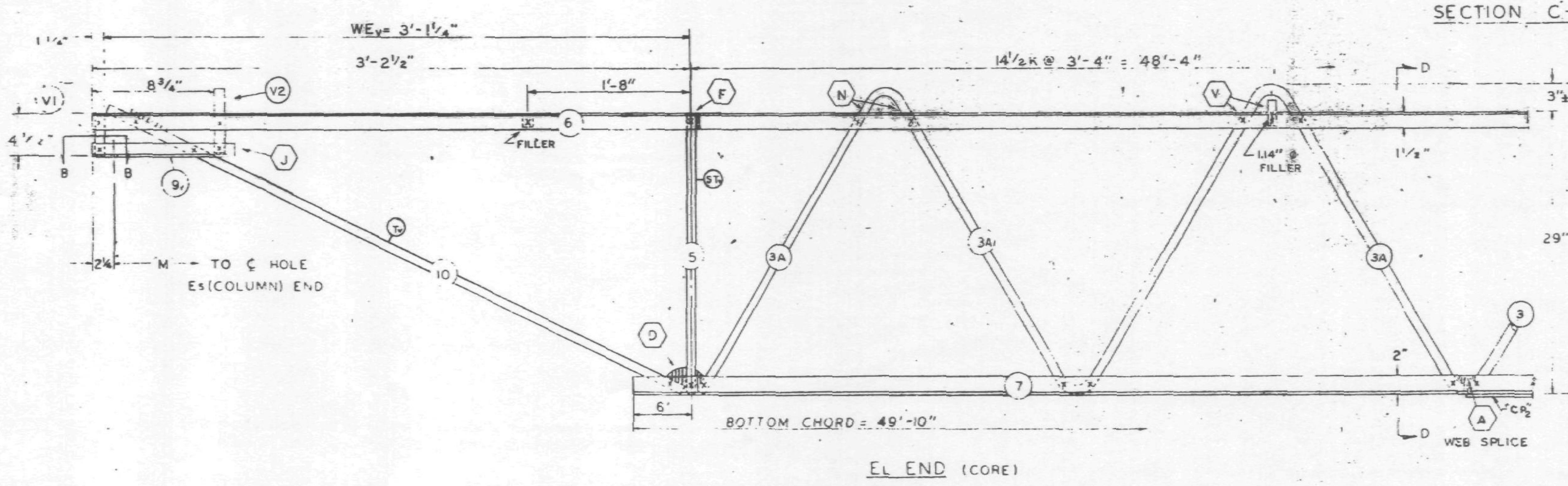

EL END (CORE)

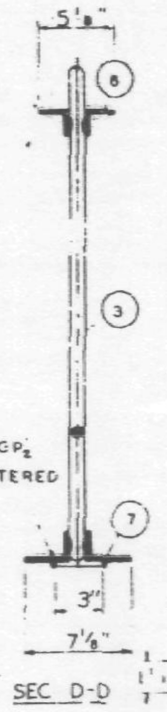

SEC D-D

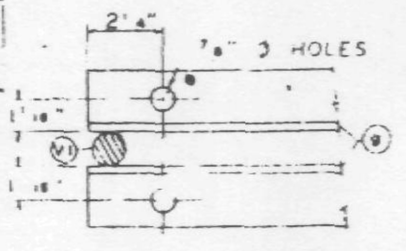

SECTION B-B

NO.	DATE	REVISION	BY

REF DRWGS

7-AB1-5	10-15-68
7-AB1-52	2-15-68
7-AB1-53	7-22-68
7-AB4 3	8-1-68
7-AB3-2	1-3-68
7-AB4-50.5	10-20-67

Truss length not req'd

PAINT
LACLEDE ELECTROCOAT
RED NO. 1000

TRUSS DESIGNATION	TOP CHORD TWO ANGLES				BOTTOM CHORD TWO ANGLES				MAIN WEB "W"					FILLER		"M" ℄ HOLE	CONNECTION FILLERS			CHORD PLATE				DOUBLE STRUT			
	MK	TYPE STEEL	CHORD SIZE	LENGTH	MK	TYPE STEEL	CHORD SIZE	LENGTH	MK	TYPE STEEL	DIA	LENGTH	NO OF K	NO	DIA		NO	DIA	LENGTH	MK	TYPE STEEL	SIZE	LENGTH	MK	TYPE STEEL	DIA	LENGTH
C32T8N 579	6	A242	2"×1½"×31	57'-9"	7	A36	3"×2"×33	49'-10"	3 3A	A36 A242	1.09 1.14	78'-3¾" 12'-5½"	12½ @ 3'-4" = 41'-8" 2 @ 3'-4" = 6'-8"	11	1.09	57'-3¾"	3 1	1.09 1.14	3" 3"	CP2	A36	¼×3	40'-0"	DS3	A242	.75	2'-6¾"

COLUMN END

Es END	TRUSS DESIGNATION	BEARING ANGLES				WE	DIAGONAL "T" STRUT				VERTICAL "ST" STRUT				END STIFFENER MK. V1			END STIFFENER MK. V3			DOUBLE STRUT			
		MK	TYPE STEEL	CHORD SIZE	LENGTH		MK	TYPE STEEL	DIA	LENGTH	MK	TYPE STEEL	DIA	LENGTH	TYPE STEEL	DIA	LENGTH	TYPE STEEL	DIA	LENGTH	MK	TYPE STEEL	DIA	LENGTH
	C32T8N 579	9	A242	2"×1½"×25	2'-3"	6'-1¼"	1	A36	1.09	6'-3¼"	2	A36	1.09	2'-4⅝"	A36	1.09	4⅝"	A36	1.09	2'-9½"	DS1	A242	.92	6'-3⅛"

CHECK DIMENSION FOR TRUSS FAB.

LOCATION OF TRANS. TRUSS				
CL-1	CL-2	CL-3	CL-4	Fs
9'-6½"	22'-10½"	36'-2½"	49'-6½"	5'-2½"

CORE END

EL END	TRUSS DESIGNATION	BEARING ANGLES				WEv	DIAGONAL "Tv" STRUT				VERTICAL "STv" STRUT				END STIFFENER MK. V1			END STIFFENER MK. V2			END STIFFENER MK. V4			WEB "Wc"					WEB "Wr"				
		MK	TYPE STEEL	CHORD SIZE	LENGTH		MK	TYPE STEEL	DIA	LENGTH	MK	TYPE STEEL	DIA	LENGTH	TYPE STEEL	DIA	LENGTH	TYPE STEEL	DIA	LENGTH	TYPE STEEL	DIA	LENGTH	MK	TYPE STEEL	PCS	DIA	LENGTH	MK	TYPE STEEL	PCS	DIA	LENGTH
	C32T8N 579	9	A242	2"×1½"×25	10"	3'-1¼	10	A242	1.14	3'-10"	5	A242	1.14	2'-4⅞"	A242	1.14	4⅛"	A242	1.14	7⅛"	—	—	—	—	—	—	—	—		—	—	—	—

STEEL TRUSS DETAILS
FOR
WORLD TRADE CENTER - N.Y.C.
FOR
THE PORT OF NEW YORK AUTHORITY

FLOOR TRUSS C32T8N 57'-9" OVERALL
WORLD TRADE CENTER TOWER A-B

FABRICATION BY LACLEDE STEEL COMPANY

FABRICATED AT MADISON, ILLINOIS		DESIGN DRAWING NO. 7-AB1-5 7-AB3-2 PLATE	
APPROVED FOR FABRICATION BY FOR PONYA	DATE	DRAWN BY [illegible] DATE MAY 1, 1969	
APPROVED FOR FABRICATION BY FOR FABRICATOR	DATE	CHECKED BY J.R. PAUL DATE MAY 1, 1969	IN CHARGE OF PROD. DEV.
DETAILED BY A.C. WEBER		FABRICATION CONT. NO. WTC 221	SHEET NO. [illegible]

LACLEDE STEEL CO.

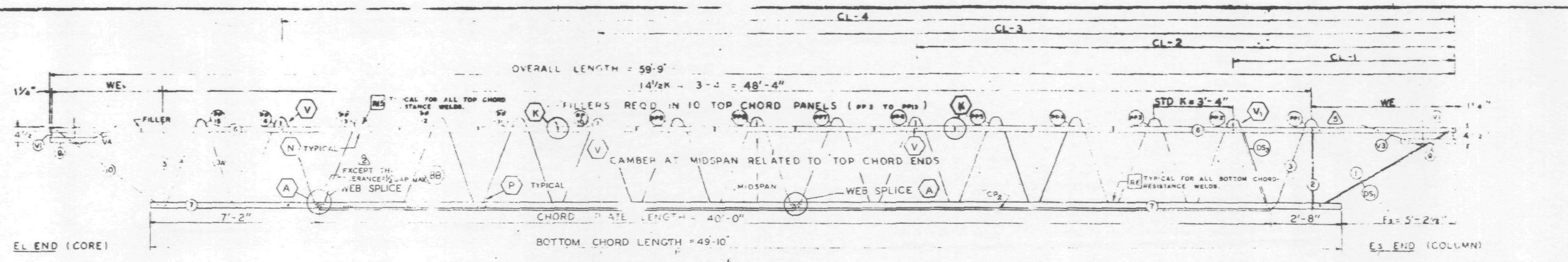

TRUSS ELEVATION

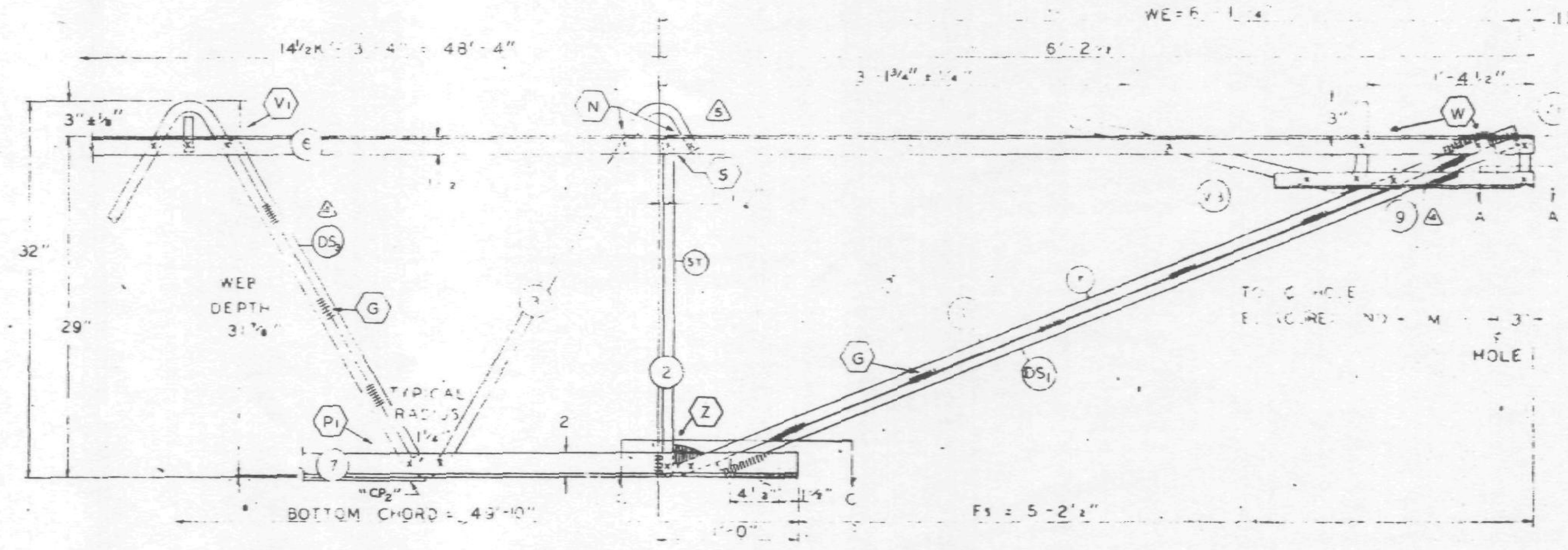

Es END (COLUMN)

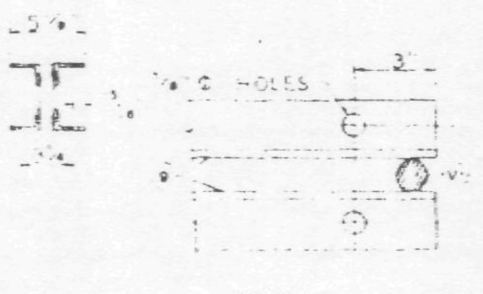

SECTION A-A

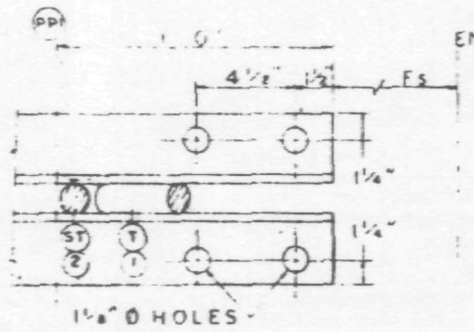

SECTION C-C

DAMPING UNIT CONNECTION PLATE ATTACHED TO BOTTOM CHORD (COL END) IN FIELD ASSEMBLY BY CONTRACT WTC 223.00.

ALL PANEL POINTS RESISTANCE WELDED
ARC WELDS INDICATED AT SHADED AREAS
AND AT BOTTOM CHORD WEB SPLICES
ALL WELD DETAILS SHOWN ON SHEETS ST290, ST291, ST 292,
AND ST280.
SEE SHEET ST293 FOR V1, V3 & V4 DETAILS.
CHORD PLATE DETAILS SHOWN ON SHEET ST280.
LETTERS IN HEXAGON INDICATE WELD DETAIL, ie., (A).
LETTERS AND NUMBERS IN SQUARES INDICATE RESISTANCE WELD STRENGTH IDENTIFIED IN THE QUALITY CONTROL PROGRAM, ie., R6.

FABRICATION REQUIREMENTS	DESIGN	TOLERANCE
CAMBER AT MIDSPAN	2"	± 3/8"
DESIGN DEPTH		± 1/4"
PANEL "K"	3'-4"	± 1/4
OVERALL LENGTH	59'-9"	± 3/8
WEB DEPTH	31 7/8"	1/4"

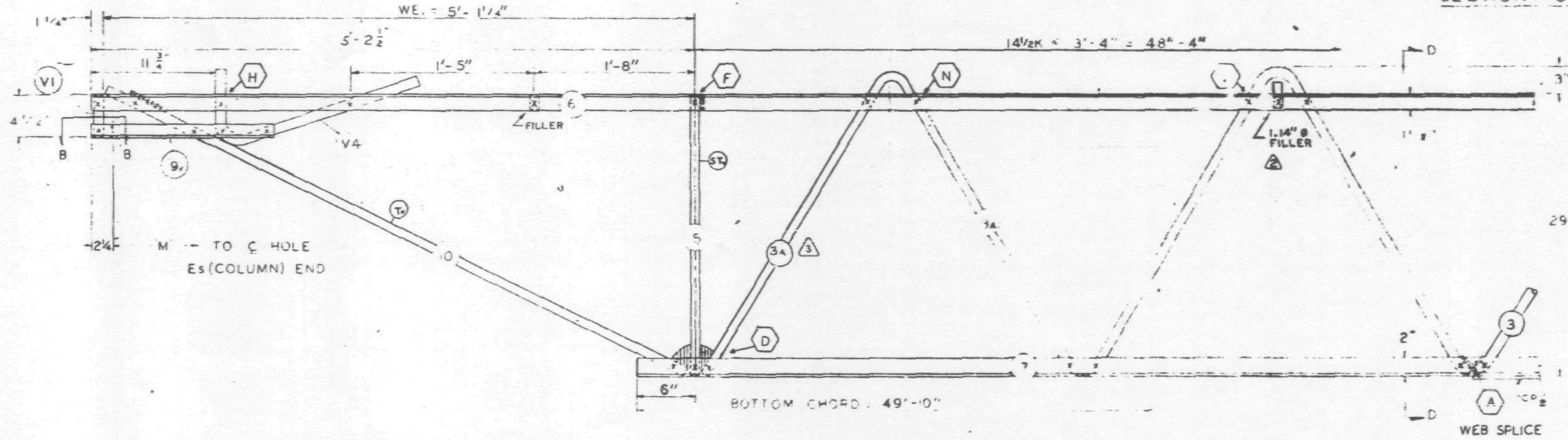

EL END (CORE)

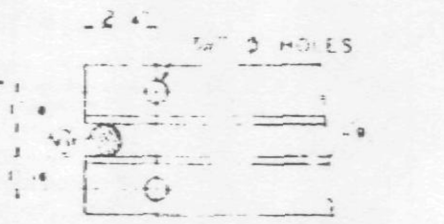

SECTION B-B

NO.	DATE	REVISION	BY
5	11-19-68	AS NOTED	G.D.C.
4	7-22-68	MK. (9) LENGTH & DS_2 LENGTH	T.M.C.
3	7-8-68	TOLERANCE, WEB SPLICE; MAIN WEB	T.M.C.
2	6-27-68	AS NOTED	T.M.C.
1	6-22-68	GENERAL	T.M.C.

5 REF DRWGS

7-AB1-5	10-15-68
7-AB1-52	2-1?-68
7-AB1-53	7-22-68
7-AB4-50	8-1-68
7-AB3-2	1-3-68
7-AB4-50S	10-20-67

PAINT
LACLEDE ELECTRO...
REF. ...

TRUSS DESIGNATION	TOP CHORD TWO ANGLES MK	TYPE STEEL	CHORD SIZE	LENGTH	BOTTOM CHORD TWO ANGLES MK	TYPE STEEL	CHORD SIZE	LENGTH	MAIN WEB "W" MK	TYPE STEEL	DIA	LENGTH (5)	NO OF K	FILLER NO	DIA	"M" ℄-℄ HOLE	CONNECTION FILLER NO.	DIA.	LENGTH	CHORD PLATE MK	TYPE STEEL	SIZE	LENGTH	DOUBLE STRUT MK	TYPE STEEL	DIA.	LENGTH (4)
C32T8 A-599	6	A242	2"x[illegible]x.3	59'-9"	7	A36	3"x2"x.33	49'-10"	3 / 3A	A36 / A242	1.09 / 1.14	78'-3¾" / 12'-5½"	12½K @ 3'-4" = 41'-8" / 2K @ 3'-4" = 6'-8"	11	1.09	59'-3¾"	3 / 1	1.09" / 1.14 (2)	3" / 3"	CP_2	A36	4x3	40'-0"	DS_2	A242	.75	2'-6¾"

COLUMN END

Es END TRUSS DESIGNATION	BEARING ANGLES MK	TYPE STEEL	CHORD SIZE	LENGTH (4)	WE	DIAGONAL "T" STRUT MK	TYPE STEEL	DIA	LENGTH	VERTICAL "ST" STRUT MK	TYPE STEEL	DIA	LENGTH (5)	END STIFFENER MK V1 TYPE STEEL	DIA	LENGTH	MK V3 TYPE STEEL	DIA	LENGTH	DOUBLE STRUT MK	TYPE STEEL	DIA	LENGTH
C32T8A-599	9	A242	2"x1½"x.25	2'-3"	6'-1¼"	[illegible]	A36	1.09	6'-3⅛"	2	A36	1.09	2'-4⅞"	A36	1.09	4⅜"	A36		9¼"	DS_1	A242	.92	6'-3⅛"

CORE END

EL END TRUSS DESIGNATION	BEARING ANGLES MK	TYPE STEEL	CHORD SIZE	LENGTH	WE	DIAGONAL "T" STRUT MK	TYPE STEEL	DIA	LENGTH	VERTICAL "ST" STRUT MK	TYPE STEEL	DIA	LENGTH (5)	END STIFFENER MK V1 TYPE STEEL	DIA	LENGTH	MK V2 TYPE STEEL	DIA	LENGTH	MK V4 TYPE STEEL	DIA	LENGTH	WEB "WC" MK	TYPE STEEL	PCS	DIA	LENGTH	WEB "WT" MK	TYPE STEEL	PCS	DIA	LENGTH
C32T8A-598	9	A242	2"x1½"x.25	1'-7"	5'-1½"	10	A242	1.14	5'-6½"	5	A242	1.14	2'-4⅜"	A242	1.14	4½"	–	–	–	A242	1.14	2'-2½"	–	—	–	–	—	–	—	—	—	—

CHECK DIMENSION FOR TRUSS FAB

LOCATION OF TRANS TRUSS				
CL-1	CL-2	CL-3	CL-4	Fs
9'-6½"	22'-10½"	36'-2½"	49'-6½"	5'-2½"

STEEL TRUSS DETAILS
FOR
... THE PORT OF NEW YORK AUTHORITY

FLOOR TRUSS C32T8A 59'-9" OVERALL
WORLD TRADE CENTER TOWER A-B

FABRICATION BY LACLEDE STEEL COMPANY

FABRICATED AT MADISON, ILLINOIS	DESIGN DRAWING NO 7-AB1-5 7-AB3-2	PLATE
APPROVED FOR FABRICATION DATE FOR PONYA 12/2/68	DRAWN BY ... DATE FEB. 24, 1968	
APPROVED FOR FABRICATION DATE BY FOR FABRICATOR	CHECKED BY J R PAUL DATE FEB. 24, 1968	IN CHARGE OF PROD REV
DETAILED BY A.C. WEBER	FABRICATION CONT NO WTC 221	SHEET NO ST208A

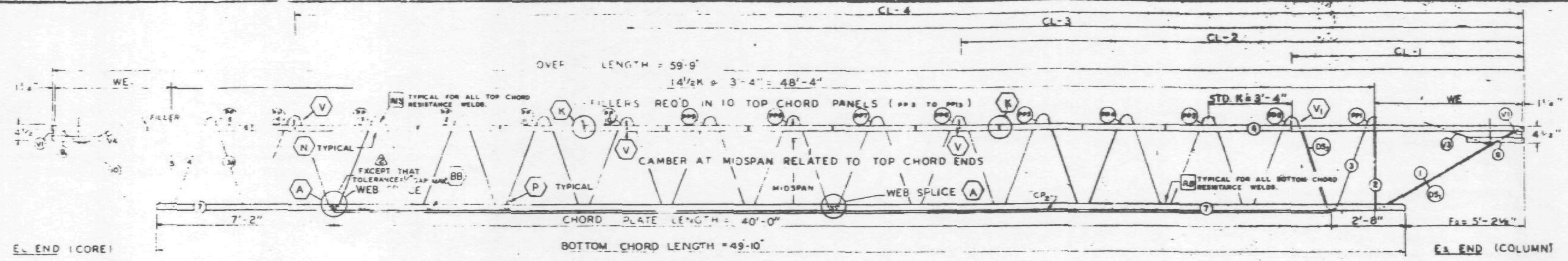

TRUSS ELEVATION

FABRICATION REQUIREMENTS	DESIGN	TOLERANCE
CAMBER AT MIDSPAN	2"	± 3/8"
DESIGN DEPTH	28"	± 1/4"
PANEL "K"	3'-4"	± 1/4"
OVERALL LENGTH	59'-9"	± 3/8"
WEB DEPTH	31 7/8"	± 1/4"

ALL PANEL POINTS RESISTANCE WELDED (x).
ARC WELDS INDICATED AT SHADED AREAS AND AT BOTTOM CHORD WEB SPLICES
ALL WELD DETAILS SHOWN ON SHEETS ST290, ST291, ST292, AND ST280.
SEE SHEET ST295 FOR V1, V3, & V4 DETAILS.
CHORD PLATE DETAILS SHOWN ON SHEET ST280.
LETTERS IN HEXAGON INDICATE WELD DETAIL, i.e. (A).
LETTERS AND NUMBERS IN SQUARES INDICATE RESISTANCE WELD STRENGTH IDENTIFIED IN THE QUALITY CONTROL PROGRAM, i.e. R6

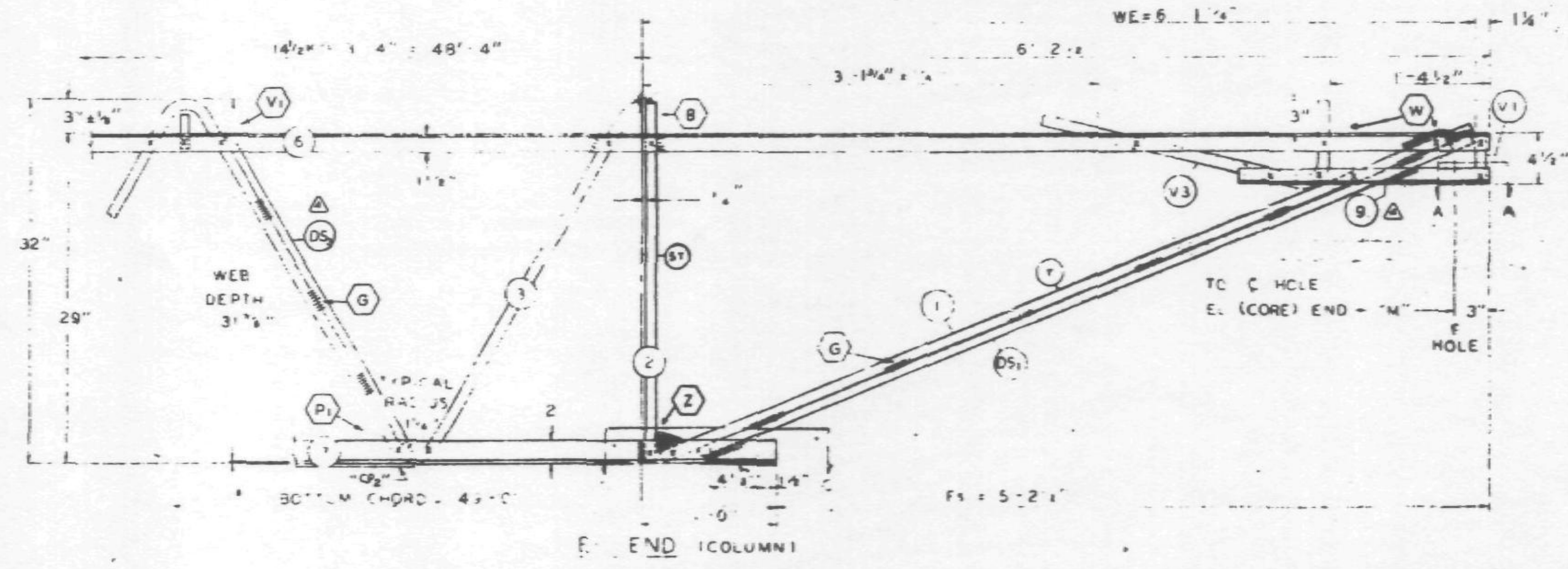

℄ END (COLUMN)

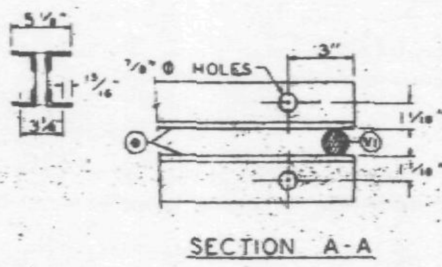

SECTION A-A

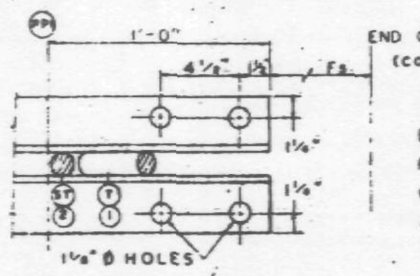

SECTION C-C

DAMPING UNIT CONNECTION PLATE ATTACHED TO BOTTOM CHORD (COL END) IN FIELD ASSEMBLY BY CONTRACT WTC 223.00.

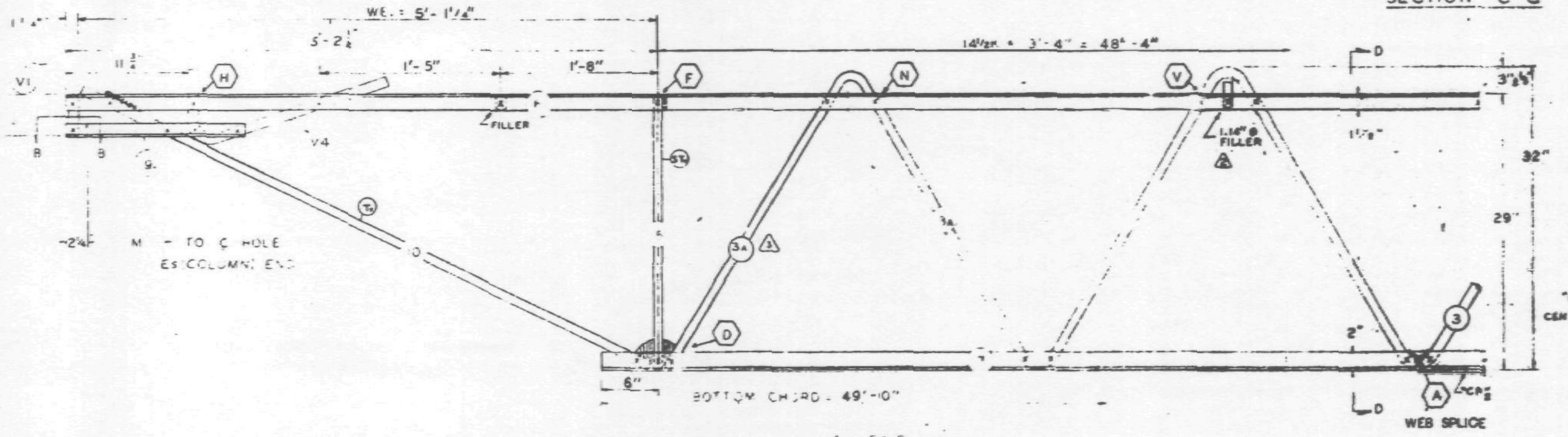

℄ END (CORE)

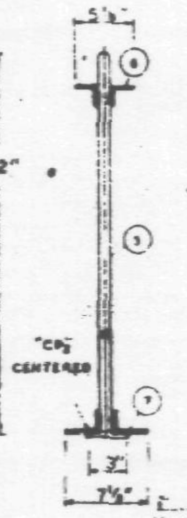

SEC. D-D

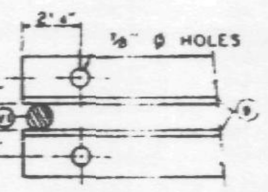

SECTION B-B

NO.	DATE	REVISION	BY
4	7-22-68	MK. (9) LENGTH & DS, LENGTH	M.C.
3	7-8-68	TOLERANCE, WEB SPLICE; MAIN WEB	T.M.C.
2	6-27-68	AS NOTED	T.M.C.
1	6-22-68	GENERAL	T.M.C.

REF DRWGS

7-AB1-5	4-15-68
7-AB1-52	2-15-68
7-AB1-53	1-3-68
7-AB4-50 & 50.2	10-20-67
7-AB3-2	1-3-68
7-AB4-50.5	10-20-67

PAINT
LACLEDE ELECTROCOAT
RED NO 10001

TRUSS DESIGNATION	TOP CHORD TWO ANGLES MK	TYPE STEEL	CHORD SIZE	LENGTH	BOTTOM CHORD TWO ANGLES MK	TYPE STEEL	CHORD SIZE	LENGTH	MAIN WEB "W" MK	TYPE STEEL	DIA	LENGTH	NO OF K	FILLER NO	DIA	"M" ℄ HOLE	CONNECTION FILLER NO.	DIA.	WIDTH	CHORD PLATE MK	TYPE STEEL	SIZE	LENGTH	DOUBLE STRUT MK	TYPE STEEL	DIA.	LENGTH
C32T8A-599	6	A242	2"x1½"x.3	59'-9"	7	A36	3"x2"x.33	49'-10"	3 / 3A	A36 / A242	1.09 / 1.14	77'-10⅝" / 12'-5½"	12½K @ 3'-4" = 41'-8" / 2K @ 3'-4" = 6'-8"	11	1.09	59'-3¾"	3	[illegible]	[illegible]	CR	A36	¼x3	40'-0"	DS	A242	.75	2'-6¾"

COLUMN END

℄ END	TRUSS DESIGNATION	BEARING ANGLES MK	TYPE STEEL	CHORD SIZE	LENGTH	WE	DIAGONAL "T" STRUT MK	TYPE STEEL	DIA	LENGTH	VERTICAL "ST" STRUT MK	TYPE STEEL	DIA	LENGTH	END STIFFENER MK. V1 TYPE STEEL	DIA	LENGTH	MK. V3 TYPE STEEL	DIA	LENGTH	DOUBLE STRUT MK	TYPE STEEL	DIA	LENGTH
	C32T8A-599	9	A242	2"x1½"x.25	2'-3"	6'-1¼"	1	A36	1.09	6'-3½"	2	A36	1.09	2'-7⅞"	A36	1.09	4⅞"	A36	1.09	2'-9⅝"	DS	A242	.92	6'-3½"

CHECK DIMENSION FOR TRUSS FAB. LOCATION OF TRANS. TRUSS				
CL-1	CL-2	CL-3	CL-4	F₂
9'-6½"	22'-10½"	36'-2½"	49'-6½"	5'-2¼"

CORE END

℄ END	TRUSS DESIGNATION	BEARING ANGLES MK	TYPE STEEL	CHORD SIZE	LENGTH	WE	DIAGONAL "T" STRUT MK	TYPE STEEL	DIA	LENGTH	VERTICAL "ST" STRUT MK	TYPE STEEL	DIA	LENGTH	END STIFFENER MK. V1 TYPE STEEL	DIA	LENGTH	MK. V2 TYPE STEEL	DIA	LENGTH	MK. V4 TYPE STEEL	DIA	LENGTH	WEB "Wc" MK	TYPE STEEL	PCS	DIA	LENGTH	WEB "WT" MK	TYPE STEEL	PCS	DIA	LENGTH
	C32T8A-599	9	A242	2"x1½"x.25	1'-7"	5'-1½"	10	A242	1.14	5'-6"	5	A242	1.14	2'-4¾"	A242	1.14	[illegible]	—	—	—	A242	1.14	2'-2"	—	—	—	—	—	—	—	—	—	—

STEEL TRUSS DETAILS
FOR
WORLD TRADE CENTER - N.Y.C.
FOR
THE PORT OF NEW YORK AUTHORITY

FLOOR TRUSS C32T8A 59'-9" OVERALL
WORLD TRADE CENTER TOWER A-B

FABRICATION BY LACLEDE STEEL COMPANY

FABRICATED AT MADISON, ILLINOIS	DESIGN DRAWING NO 7-AB1-5 7-AB3-2 PLATE	
APPROVED FOR FABRICATION BY [signature] FOR P.O.N.Y.A. DATE 8/2/68	DRAWN BY [initials] DATE FEB. 24, 1968	
APPROVED FOR FABRICATION BY FOR FABRICATOR DATE	CHECKED BY J.R. PAUL DATE FEB. 24, 1968	IN CHARGE OF PROD. DEV.
DETAILED BY A.C. WEBER	FABRICATION CONT. NO W.T.C. 221	SHEET NO ST208A

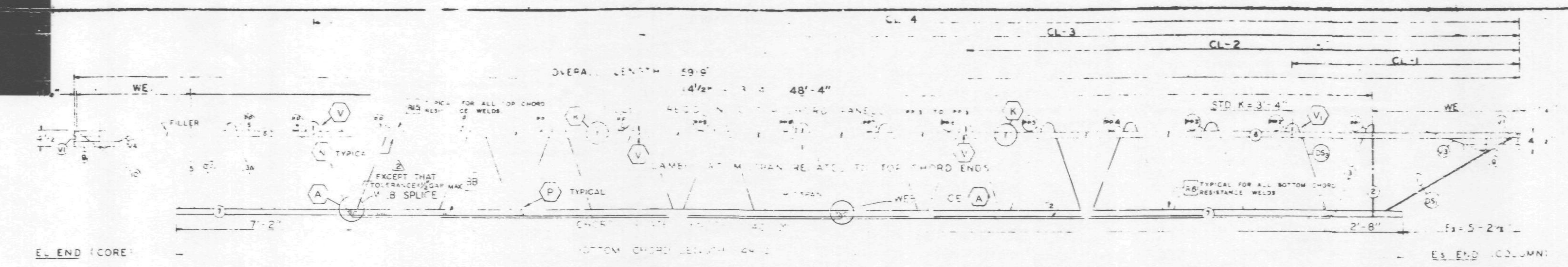

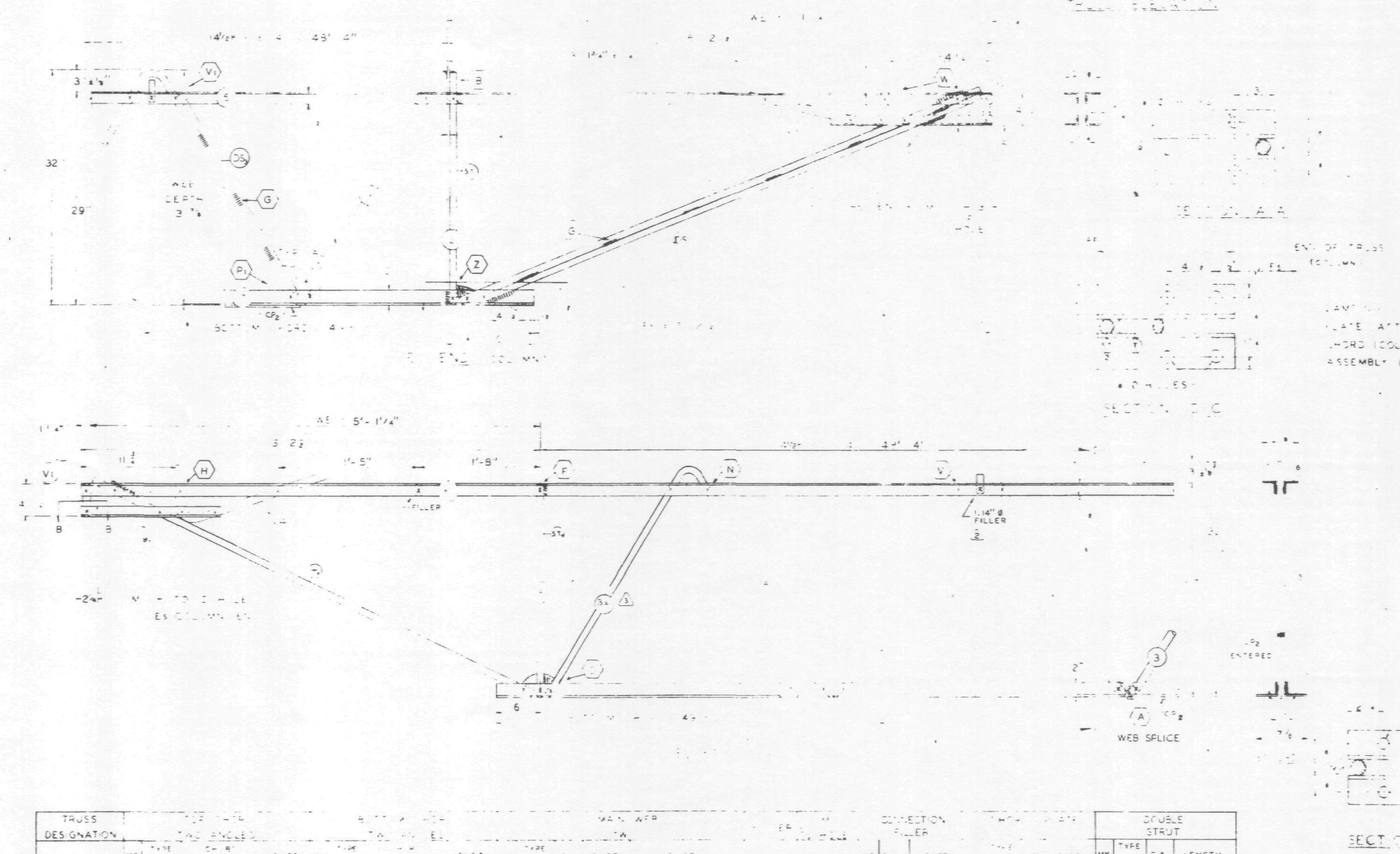

FABRICATION REQUIREMENTS	DESIGN	TOLERANCE
CAMBER AT MIDSPAN	2"	± 3/8"
DESIGN DEPTH		± 1/4
PANEL "K"	3'-4"	± 1
OVERALL LENGTH	59'-8"	± 3/8"
WEB DEPTH	31 7/8	± 1/4

ALL PANEL POINTS RESISTANCE WELDED x
ARC WELDS INDICATED AT SHADED AREAS
AND AT BOTTOM CHORD WEB SPLICES
ALL WELD DETAILS SHOWN ON SHEETS ST290, ST291, ST 292,
AND ST[illegible]
SEE SHEET [illegible] V3 & V4 DETAILS
CHORD PLATE DETAILS SHOWN ON SHEET ST280
LETTERS IN HEXAGON INDICATE WELD DETAIL, ie., (A).
LETTERS AND NUMBERS IN SQUARES INDICATE RESISTANCE WELD STRENGTH IDENTIFIED IN THE QUALITY CONTROL PROGRAM, ie., R6.

[illegible] CONNECTION
PLATE ATTACHED TO BOTTOM
CHORD (COL END) IN FIELD
ASSEMBLY BY CONTRACT WTC 223.00

NO.	DATE	REVISION	BY
3	7-6-68	TOLERANCE, WEB SPLICE; MAIN WEB	T.M.C.
2	6-27-68	AS NOTED	T.M.C.
1	6-22-68	GENERAL	T.M.C.

REF. DRWGS

7-AB1-5	4-5-68
7-AB1-52	2-5-68
7-AB1-53	[illegible]-3-68
7-AB4-50 & 50.2	10-20-67
7-AB3-2	[illegible]-3-68
7-AB4-50.5	10-20-67

TRUSS DESIGNATION	TOP CHORD TWO ANGLES				BOTTOM CHORD TWO ANGLES				MAIN WEB								CONNECTION FILLER							DOUBLE STRUT			
	MK	TYPE STEEL	CHORD SIZE	LENGTH	MK	TYPE STEEL	SIZE	LENGTH	MK	TYPE STEEL	DIA	LENGTH	NO. OF [illegible]	[illegible]	DIA	[illegible]	NO	DIA	LENGTH	MK	TYPE STEEL	[illegible]	LENGTH	MK	TYPE STEEL	DIA	LENGTH
C32T8A-599	6	A242	2 x [illegible]	59'-9	7	A36	3 x [illegible] x 3?	49'-0"	3 / 3A	A36 / A242	1.09 / 1.14	77'-10⅜" / [illegible]'-5½"	12½2K @ 3'-4" = 4'-8" / 2K @ 3'-4" = 6'-8"	1	.09	[illegible]	3 / 1	1.09" / 1.14	3" / 3"	CP₂	A-6	4x3	4'-0"	DS₂	A242	.75	2'-8½"

COLUMN END

E₂ END	TRUSS DESIGNATION	BEARING ANGLES				WE	DIAGONAL ST. STRUT				VERTICAL ST. STRUT				END STIFFENER						DOUBLE STRUT			
		MK	TYPE STEEL	CHORD SIZE	LENGTH		MK	TYPE STEEL	DIA	LENGTH	MK	TYPE STEEL	DIA	LENGTH	TYPE STEEL	DIA	LENGTH	TYPE STEEL	[illegible]	LENGTH	MK	TYPE STEEL	DIA	LENGTH
	C32T8A-599	9	A242	2"x1½"x.25	2'-0"	6'-1¼"		A36	1.09	6'-3⅛"	2	A36	1.09	2'-7⅞"	A36	1.09	4⅝"	A36	1.09	2'-9½"	DS₁	A242	.92	6'-3⅛"

CHECK DIMENSION FOR TRUSS FAB LOCATION OF TRANS TRUSS				
CL-1	CL-2	CL-3	CL-4	F₂
9'-6½"	22'-10½"	36'-2½"	49'-6½"	5'-2½"

CORE END

E₁ END	TRUSS DESIGNATION	BEARING ANGLES				WE	DIAGONAL ST. STRUT				VERTICAL ST. STRUT				END STIFFENER									WEB "WC"					WEB "WT"				
															MK V1			MK V2			MK V4												
		MK	TYPE STEEL	CHORD SIZE	LENGTH		MK	TYPE STEEL	DIA	LENGTH	MK	TYPE STEEL	DIA	LENGTH	TYPE STEEL	DIA	LENGTH	TYPE STEEL	DIA	LENGTH	TYPE STEEL	DIA	LENGTH	MK	TYPE STEEL	PCS	DIA	LENGTH	MK	TYPE STEEL	PCS	DIA	LENGTH
	C32T8A-599	9₁	A242	2"x1½"x.25	1'-7"	5'-1¼"	0	A242	1.4	5'-6½"	5	A242	[illegible]	2'-4¾"	A242	[illegible]	[illegible] 4	-	-	-	A242	1.14	2'-2½"	-	—	—	—	—	-	—	—	—	—

STEEL TRUSS DETAILS
FOR
[illegible] CENTER [illegible]
FOR
THE PORT OF NEW YORK AUTHORITY

FLOOR TRUSS C32T8A 59'-9" OVERALL
WORLD TRADE CENTER TOWER A-B

FABRICATION BY LACLEDE STEEL COMPANY		
FABRICATED AT MADISON, ILLINOIS	DESIGN DRAWING NO. 7-AB1-5 7-AB3-2 PLATE	
APPROVED FOR FABRICATION BY Jw FOR [illegible] DATE 7/12/68	DRAWN BY [illegible] DATE FEB 24, 1968	
APPROVED FOR FABRICATION BY FOR FABRICATOR DATE	CHECKED BY J.R PAUL DATE FEB. 24, 1968	IN CHARGE OF PROD. DEV.
DETAILED BY [illegible] WEBER	FABRICATION CONT. NO. WTC 221	SHEET NO. ST208A

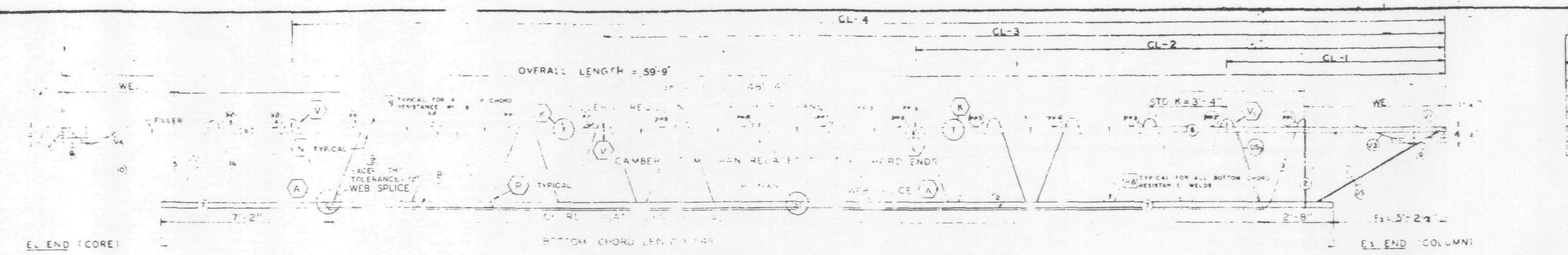

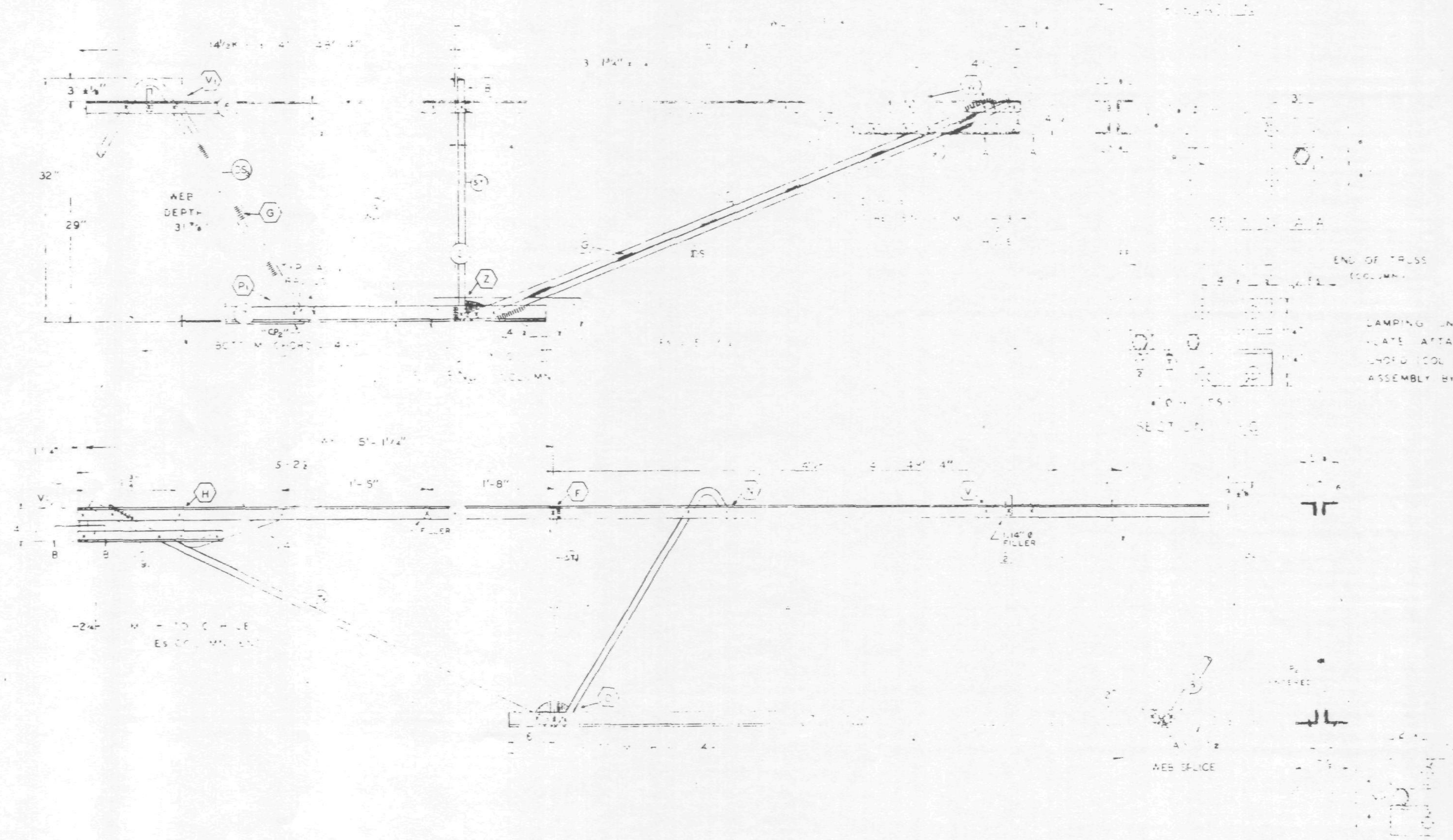

FABRICATION REQUIREMENTS	DESIGN	TOLERANCE
CAMBER AT MIDSPAN	2"	± 3/8"
DESIGN DEPTH	29	± 1/4"
PANEL "K"	4"	± 1/4"
OVERALL LENGTH	59'-9"	± 3/
WEB DEPTH	31 7/8"	± 1/

ALL PANEL POINTS RESISTANCE WELDED. ARC WELDS INDICATED AT SHADED AREAS AND AT BOTTOM CHORD WEB SPLICES.
ALL WELD DETAILS SHOWN ON SHEETS ST290, ST291, ST 292, AND ST280.
SEE SHEET ST295 FOR V1, V2, & V4 DETAILS.
CHORD PLATE DETAILS SHOWN ON SHEET ST280.
LETTERS IN HEXAGON INDICATE WELD DETAIL, ie., (A).
LETTERS AND NUMBERS IN SQUARES INDICATE RESISTANCE WELD STRENGTH IDENTIFIED IN THE QUALITY CONTROL PROGRAM, ie., R6.

NO.	DATE	REVISION	BY
2	6-27-68	AS NOTED	T.M.C.
1	6-22-68	GENERAL	T.M.C.

REF. DRWGS

7-AB1-5	4-5-68
7-AB1-52	2-15-68
7-AB1-53	1-3-68
7-AB4-50 & 50.2	10-20-67
7-AB1-2	1-3-68
7-AB4-50.5	10-20-67

TRUSS DESIGNATION	TWO ANGLES MK	TYPE STEEL	SIZE	LENGTH	MK	TYPE STEEL	SIZE	LENGTH	MK	TYPE STEEL	DIA	LENGTH	NO. OF							LENGTH					DOUBLE STRUT MK	TYPE STEEL	DIA	LENGTH
C32T8A-599	6	A242	2" x [illegible]	59'-9"		A36	[illegible]	49'-10"	3 / 3A	A36 / A242	.109 / .114	77'-10 3/8" / [illegible]-5 1/2"	12 1/2K / 2K	3'-4" / 3'-4"	[illegible]		.59	[illegible]	3	1.09" / 1.14	3"	CP2	A36	4 3/4	S3	A242	.75	2'-8 1/2"

COLUMN END

Es END	TRUSS DESIGNATION	BEARING ANGLES MK	TYPE STEEL	CHORD SIZE	LENGTH	WE.	DIAGONAL Ts STRUT MK	TYPE STEEL	DIA	LENGTH	VERTICAL St STRUT MK	TYPE STEEL	DIA	LENGTH	END STIFFENER MK V1 TYPE STEEL	DIA	LENGTH	MK V3 TYPE STEEL	DIA	LENGTH	DOUBLE STRUT MK	TYPE STEEL	DIA	LENGTH
	C32T8A-599	9	A242	2"x1 1/2"x.25	2'-0"	6'-4"		A36	.109	6'-3 1/8"	2	A36	.109	2'-7 1/8"	A36	.109	4 3/8"	A36	.109	2'-9 1/2"	DS	A242	.92	6'-3 1/8"

CHECK DIMENSION FOR TRUSS FAB LOCATION OF TRANS TRUSS CL-1	CL-2	CL-3	CL-4	Fs
9'-6 1/4"	22'-10 1/8"	36'-2 1/8"	49'-6 1/2"	5'-2 1/4"

CORE END

EL END	TRUSS DESIGNATION	BEARING ANGLES MK	TYPE STEEL	CHORD SIZE	LENGTH	WE.	DIAGONAL Ts STRUT MK	TYPE STEEL	DIA	LENGTH	VERTICAL St STRUT MK	TYPE STEEL	DIA	LENGTH	END STIFFENER MK V1 TYPE STEEL	DIA	LENGTH	MK V2 TYPE STEEL	DIA	LENGTH	MK V4 TYPE STEEL	DIA	LENGTH	WEB "Wc" MK	TYPE STEEL	PCS	DIA	LENGTH	WEB "WT" MK	TYPE STEEL	PCS	DIA	LENGTH
	C32T8A-599	9	A242	2"x1 1/2"x.25	1'-7"	5'-1 1/4"	10	A242	.114	5'-6 1/2"	5	A242	.114	2'-4 3/4"	A242	.114	4 1/8"	—	—	—	A242	.114	2'-2 1/8"	—	—	—	—	—	—	—	—	—	—

STEEL TRUSS DETAILS
FOR
WORLD TRADE CENTER
FOR
THE PORT OF NEW YORK AUTHORITY

FLOOR TRUSS C32T8A 59'-9" OVERALL
WORLD TRADE CENTER TOWER A-B

FABRICATION BY LACLEDE STEEL COMPANY

FABRICATED AT MADISON, ILLINOIS		DESIGN DRAWING NO. 7-AB1-5, 7-AB3-2	PLATE
APPROVED FOR FABRICATION FOR PONYA BY JW	DATE 7/5/68	DRAWN BY lwk DATE FEB. 24, 1968	
APPROVED FOR FABRICATION FOR FABRICATOR BY	DATE	CHECKED BY J.R. PAUL DATE FEB. 24, 1968	IN CHARGE OF PROD. DEV.
DETAILED BY A.C. WEBER		FABRICATION CONT. NO. WTC 221	SHEET NO. ST208A

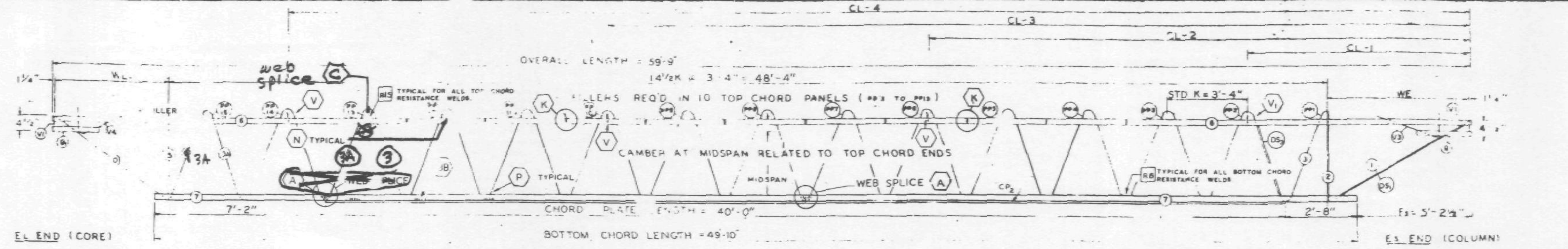

TRUSS ELEVATION

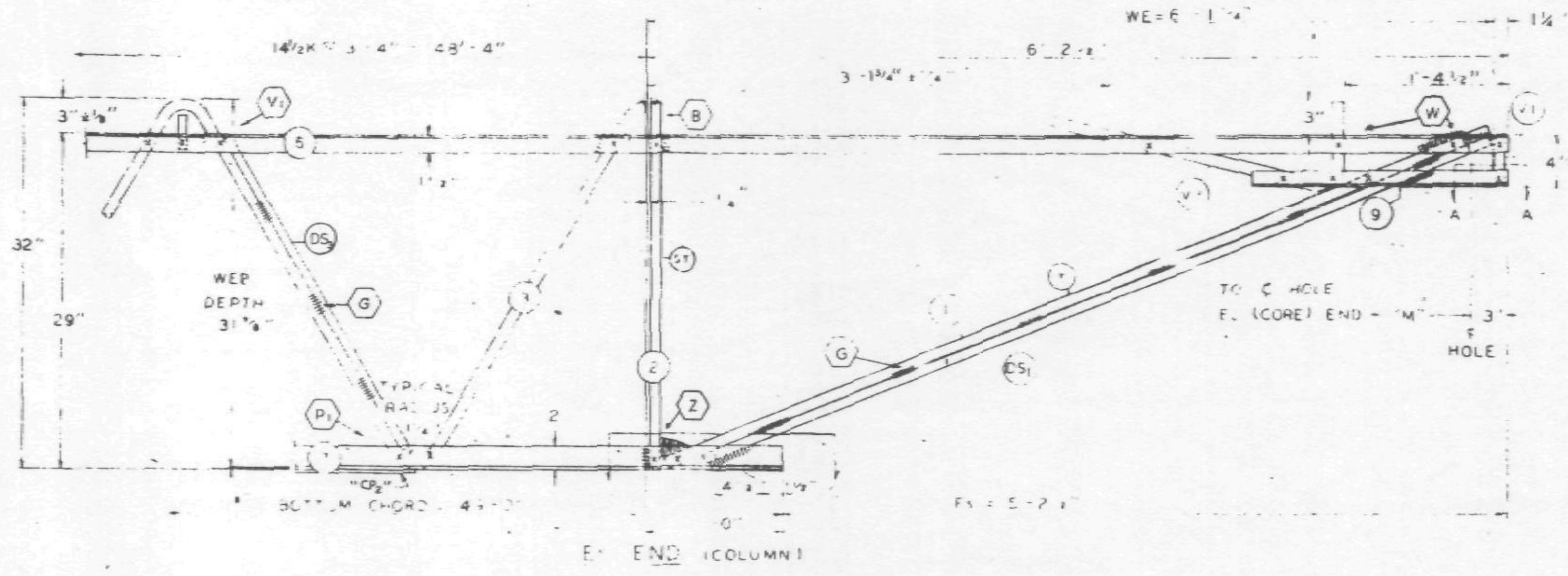

Es END (COLUMN)

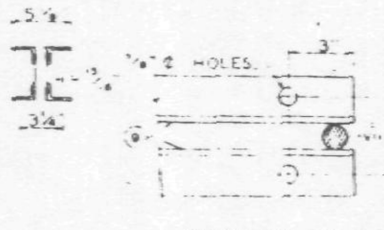

SECTION A-A

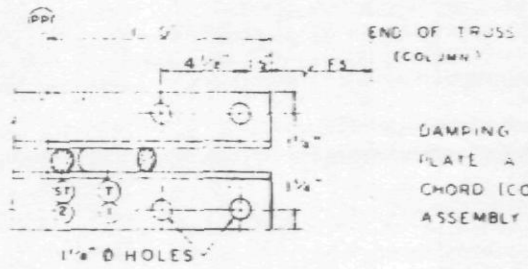

SECTION C-C

ALL PANEL POINTS RESISTANCE WELDED
ARC WELDS INDICATED AT SHADED AREAS
AND AT BOTTOM CHORD WEB SPLICES
ALL WELD DETAILS SHOWN ON SHEETS ST290, ST291, ST 292, AND ST280.
SEE SHEET ST265 [illegible] & V4 DETAILS.
CHORD PLATE DETAILS SHOWN ON SHEET ST280.
LETTERS IN HEXAGON INDICATE WELD DETAIL, ie., ⟨A⟩.
LETTERS AND NUMBERS IN SQUARES INDICATE RESISTANCE WELD STRENGTH IDENTIFIED IN THE QUALITY CONTROL PROGRAM, ie., [R6].

DAMPING UNIT CONNECTION PLATE ATTACHED TO BOTTOM CHORD (COL END) IN FIELD ASSEMBLY BY CONTRACT WTC 223.00.

FABRICATION REQUIRMENTS	DESIGN	TOLERANCE
CAMBER AT MIDSPAN	2"	± 3/8"
DESIGN DEPTH	29"	± 1/4"
PANEL "K"	3'-4"	± 1/4
OVERALL LENGTH	59-9"	± 3/8"
WEB DEPTH	31 7/8"	± 1/4"

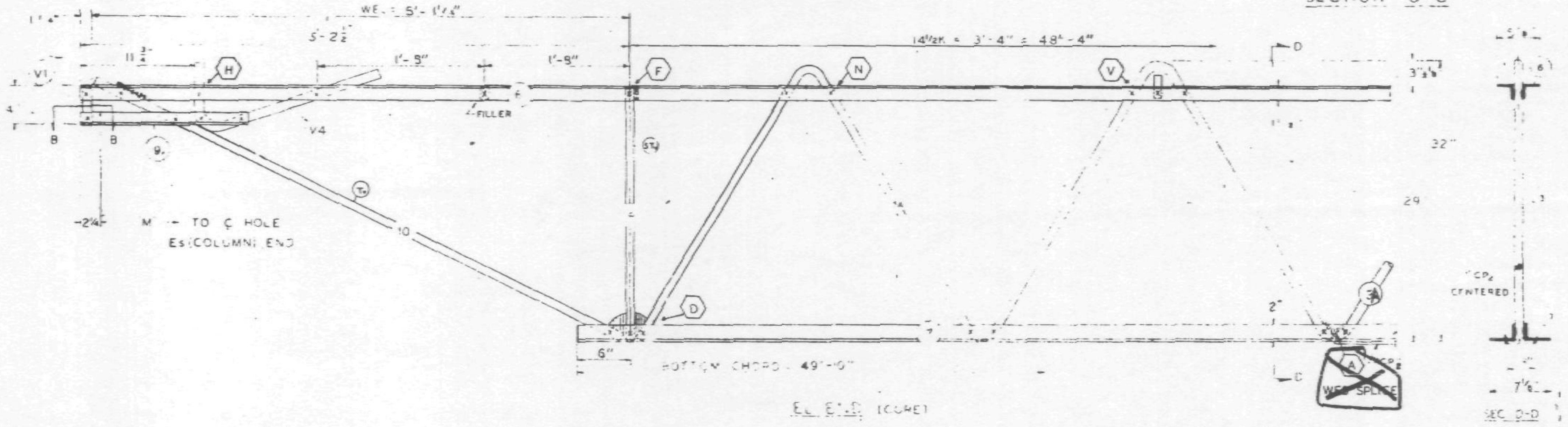

EL END (CORE)

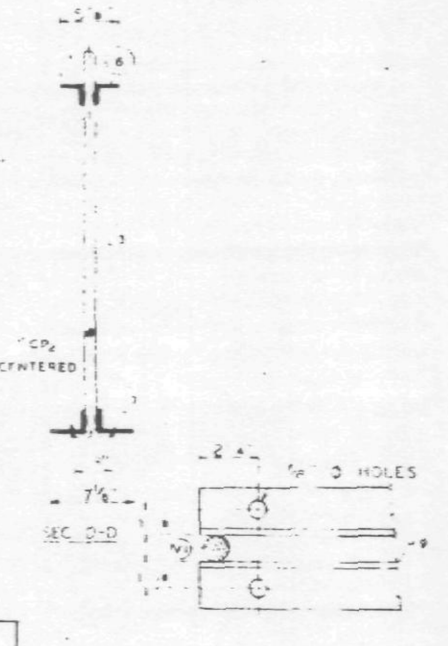

SECTION B-B

NO.	DATE	REVISION	BY
1	8-22-68	GENERAL	T.M.C.

REF DRWGS

7-AB1-5	4-15-68
7-AB1-52	2-15-68
7-AB1-53	1-3-68
7-AB4-50 & 50.2	10-20-67
7-AB3-2	1-3-68
7-AB4-50.5	10-20-67

6/25/68 WaB

LACLEDE ELECTROCOAT
REQ. NO. 1000

TRUSS DESIGNATION	TOP CHORD TWO ANGLES MK	TYPE STEEL	CHORD SIZE	LENGTH	BOTTOM CHORD TWO ANGLES MK	TYPE STEEL	CHORD SIZE	LENGTH	MAIN WEB "W" MK	TYPE STEEL	DIA	LENGTH	NO OF K	FILLER NO	DIA	"M" ℄ HOLE	CONNECTION FILLER NO.	DIA.	LENGTH	CHORD PLATE MK	TYPE STEEL	SIZE	LENGTH	DOUBLE STRUT MK	TYPE STEEL	DIA.	LENGTH
C32T8A-599	6	A242	2"x1½"x.3	59-9	7	A36	3"x2"x.33	49'-10"	3 / 3A	A36 / A242	1.09 / 1.14	77'-10¾" / 12'-5½"	12½K @ 3'-4" = 41'-8" / 2K @ 3'-4" = 6'-8"	11	1.09	59-3¾	3 / 1	1.09 / 1.14	3" / 3"	CP2	A36	¼x3	40'-0"	DS3	A242	.75	2'-8½"

COLUMN END

Es END TRUSS DESIGNATION	BEARING ANGLES MK	TYPE STEEL	CHORD SIZE	LENGTH	WE	DIAGONAL "T" STRUT MK	TYPE STEEL	DIA	LENGTH	VERTICAL "ST" STRUT MK	TYPE STEEL	DIA	LENGTH	END STIFFENER MK. V1 TYPE STEEL	DIA	LENGTH	MK. V3 TYPE STEEL	DIA	LENGTH	DOUBLE STRUT MK	TYPE STEEL	DIA	LENGTH
C32T8A-599	9	A242	2"x1½"x.25	2'-0"	6'-1¼"	1	A36	1.09	6'-3⅛"	2	A36	1.09	2'-7⅞"	A36	1.09	4⅜"	A36	1.09	2'-9½"	DS1	A242	.92	6'-3⅛"

CHECK DIMENSION FOR TRUSS FAB
LOCATION OF TRANS. TRUSS

CL-1	CL-2	CL-3	CL-4	Fs
9'-6½"	22'-10½"	36'-2½"	49'-6½"	5'-2½"

CORE END

EL END TRUSS DESIGNATION	BEARING ANGLES MK	TYPE STEEL	CHORD SIZE	LENGTH	WE	DIAGONAL "T" STRUT MK	TYPE STEEL	DIA	LENGTH	VERTICAL "ST" STRUT MK	TYPE STEEL	DIA	LENGTH	END STIFFENER MK. V1 TYPE STEEL	DIA	LENGTH	MK. V2 TYPE STEEL	DIA	LENGTH	MK. V4 TYPE STEEL	DIA.	LENGTH	WEB "WC" MK	TYPE STEEL	PCS	DIA	LENGTH	WEB "WT" MK	TYPE STEEL	PCS	DIA.	LENGTH
C32T8A-599	9	A242	2"x1½"x.25	1'-7"	5'-1½"	10	A242	1.14	5'-6½"	5	A242	1.14	2'-4¾"	A242	1.14	4½"	—	—	—	A242	1.14	2'-2½"	—	—	—	—	—	—	—	—	—	—

STEEL TRUSS DETAILS
FOR
WORLD TRADE CENTER - N.Y.C.
FOR
THE PORT OF NEW YORK AUTHORITY

FLOOR TRUSS C32T8A 59'-9" OVERALL
WORLD TRADE CENTER TOWER A-B

FABRICATION BY LACLEDE STEEL COMPANY

FABRICATED AT MADISON, ILLINOIS		DESIGN DRAWING NO 7-AB1-5 7-AB3-2	PLATE 1
APPROVED FOR FABRICATION BY FOR PONYA	DATE	DRAWN BY [illegible] DATE FEB. 24, 1968	
APPROVED FOR FABRICATION BY FOR FABRICATOR	DATE	CHECKED BY J.R. PAUL DATE FEB. 24, 1968	IN CHARGE OF PROD. DEV.
DETAILED BY A.C. WEBER		FABRICATION CONT NO WTC 221	SHEET NO ST208A

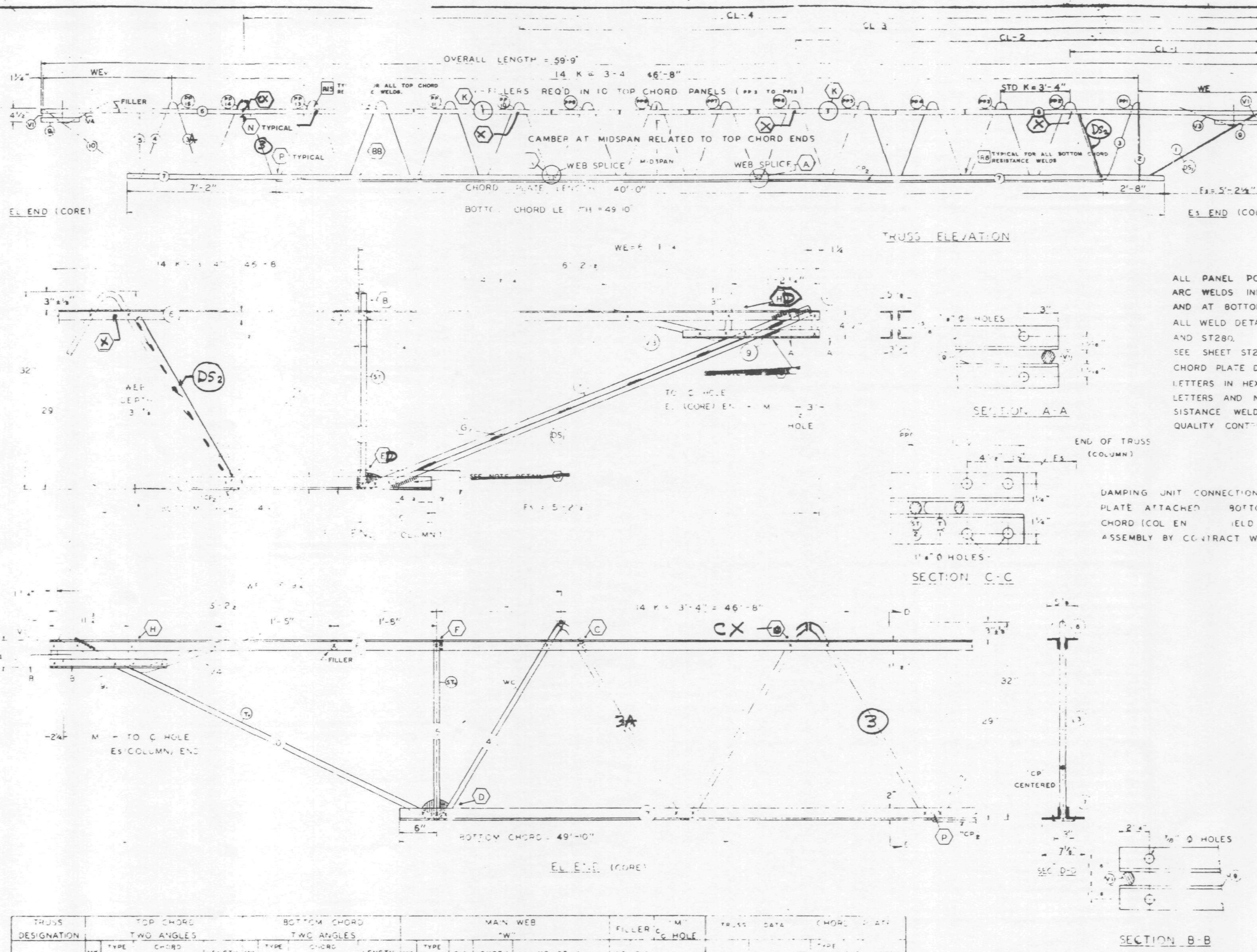

FABRICATION REQUIREMENTS

	DESIGN	TOLERANCE
CAMBER AT MIDSPAN	1"	± 3/8"
DESIGN DEPTH	28"	± 1/4"
PANEL "K"	3'-4"	± 1/4"
OVERALL LENGTH	59'-9"	± [illegible]
WEB DEPTH	31 7/8"	± 1/4"

ALL PANEL POINTS RESISTANCE WELDED X.
ARC WELDS INDICATED AT SHADED AREAS AND AT BOTTOM CHORD WEB SPLICES
ALL WELD DETAILS SHOWN ON SHEETS ST290, ST291, AND ST280.
SEE SHEET ST295 FOR V1, V3, & V4 DETAILS.
CHORD PLATE DETAILS SHOWN ON SHEET ST280.
LETTERS IN HEXAGON INDICATE WELD DETAIL, ie. (A).
LETTERS AND NUMBERS IN SQUARES INDICATE RESISTANCE WELD STRENGTH IDENTIFIED IN THE QUALITY CONTROL PROGRAM, ie. R6

DAMPING UNIT CONNECTION PLATE ATTACHED BOTTOM CHORD (COL END) FIELD ASSEMBLY BY CONTRACT WTC 223.00.

6/13/68 OKB
4-15-68

REF DRWGS

7-AB1-5	2-15-68
7-AB1-52	2-15-68
7-AB1-53	1-3-68
7-AB4-50 & 50.2	10-20-67
7-AB3-2	1-3-68
7-AB4-50.5	10-20-67

PAINT
LACLEDE ELECTROCOAT
RED NO 10001

TRUSS DESIGNATION	TOP CHORD TWO ANGLES				BOTTOM CHORD TWO ANGLES				MAIN WEB "W"					FILLER	"M" C/C HOLE		TRUSS DATA	CHORD PLATE			
	MK	TYPE STEEL	CHORD SIZE	LENGTH	MK	TYPE STEEL	CHORD SIZE	LENGTH	MK	TYPE STEEL	DIA	LENGTH	NO OF K	NO	DIA			MK	TYPE STEEL	SIZE	LENGTH
C32T8A-599	6	A242	2" x [illegible]	59-9"	7	A36	3" x 2" x .33	49'-10"	3	A36	1.09	87'-2½"	14 @ 3'-4" = 46'-8"	11	1.09	59 3¾"		CP2	A36	4x3	4 [illegible]

COLUMN END

Es END	TRUSS DESIGNATION	BEARING ANGLES				WE	DIAGONAL "T" STRUT				VERTICAL "ST" STRUT				END STIFFENER MK V1			END STIFFENER MK V3			DOUBLE STRUT			
		MK	TYPE STEEL	CHORD SIZE	LENGTH		MK	TYPE STEEL	DIA	LENGTH	MK	TYPE STEEL	DIA	LENGTH	TYPE STEEL	DIA	LENGTH	TYPE STEEL	DIA	LENGTH	MK	TYPE STEEL	DIA	LENGTH
	C32T8A-599	9	A242	2"x1½"x.25	1'-10"	6'-1¼"	1	A36	1.09	6'-3⅛"	2	A36	1.09	2'-7⅞"	A36	1.09	4⅜"	A36	1.09	2'-9½"	DS2	A242	.75	6'-3"
																					DS1	A242	.75	

CHECK DIMENSION FOR TRUSS FAB
LOCATION OF TRANS TRUSS

CL-1	CL-2	CL-3	CL-4	Fs
9'-6⅛"	22'-10 [illegible]	36'-2⅛"	49'-6½"	5'-2½"

CORE END

EL END	TRUSS DESIGNATION	BEARING ANGLES				WE	DIAGONAL "T" STRUT				VERTICAL "ST" STRUT				END STIFFENER MK V1			MK			MK V4			WEB "WC"					WEB "WT"					WEB		
		MK	TYPE STEEL	CHORD SIZE	LENGTH		MK	TYPE STEEL	DIA	LENGTH	MK	TYPE STEEL	DIA	LENGTH	TYPE STEEL	DIA	LENGTH	TYPE STEEL	DIA	LENGTH	TYPE STEEL	DIA	LENGTH	MK	TYPE STEEL	PCS	DIA	LENGTH	MK	TYPE STEEL	PCS	DIA	LENGTH	MK		DIA
	C32T8A-598	9	A242	2"x1½"x.25	1'-7"	6'-9½"	10	A242	1.14	5'-6½"	5	A242	1.14	2'-4[illegible]"	A242	1.14	4 [illegible]				A242	1.14	[illegible]	4	A242	1	1.14	3'-0½"		—	—	—	—	3A	A242	1.14

STEEL TRUSS DETAILS
FOR
WORLD TRADE CENTER
FOR
THE PORT OF NEW YORK AUTHORITY

FLOOR TRUSS C32T8A 59'-9" OVERALL
WORLD TRADE CENTER TOWER A-B

FABRICATION BY LACLEDE STEEL COMPANY
FABRICATED AT MADISON, ILLINOIS
DESIGN DRAWING NO. 7-AB1-5 7-AB3-2 PLATE
APPROVED FOR FABRICATION BY FOR PONYA DATE
DRAWN BY [illegible] DATE FEB 24, 1968
APPROVED FOR FABRICATION BY FOR FABRICATOR DATE
CHECKED BY J.R. PAUL DATE FEB. 24, 1968
IN CHARGE OF PROD [illegible]
DETAILED BY A.C. WEBER
FABRICATION CONT NO WTC 221
ST208A

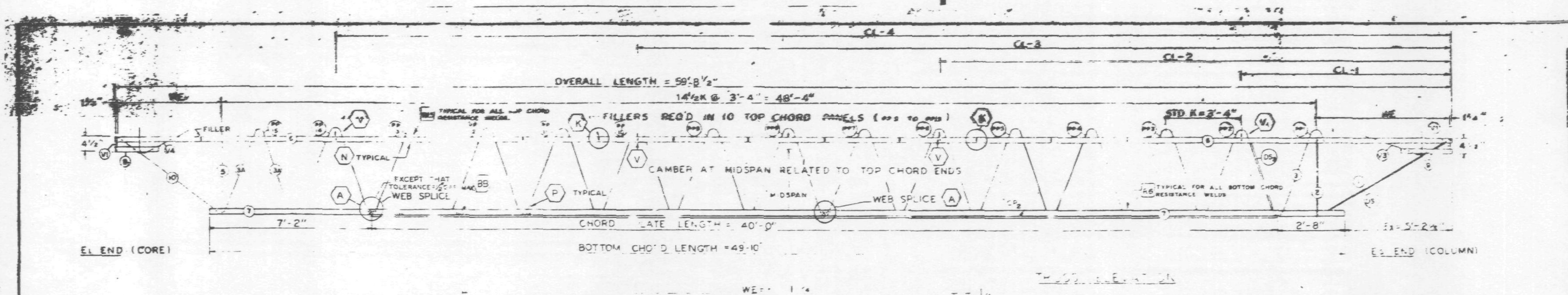

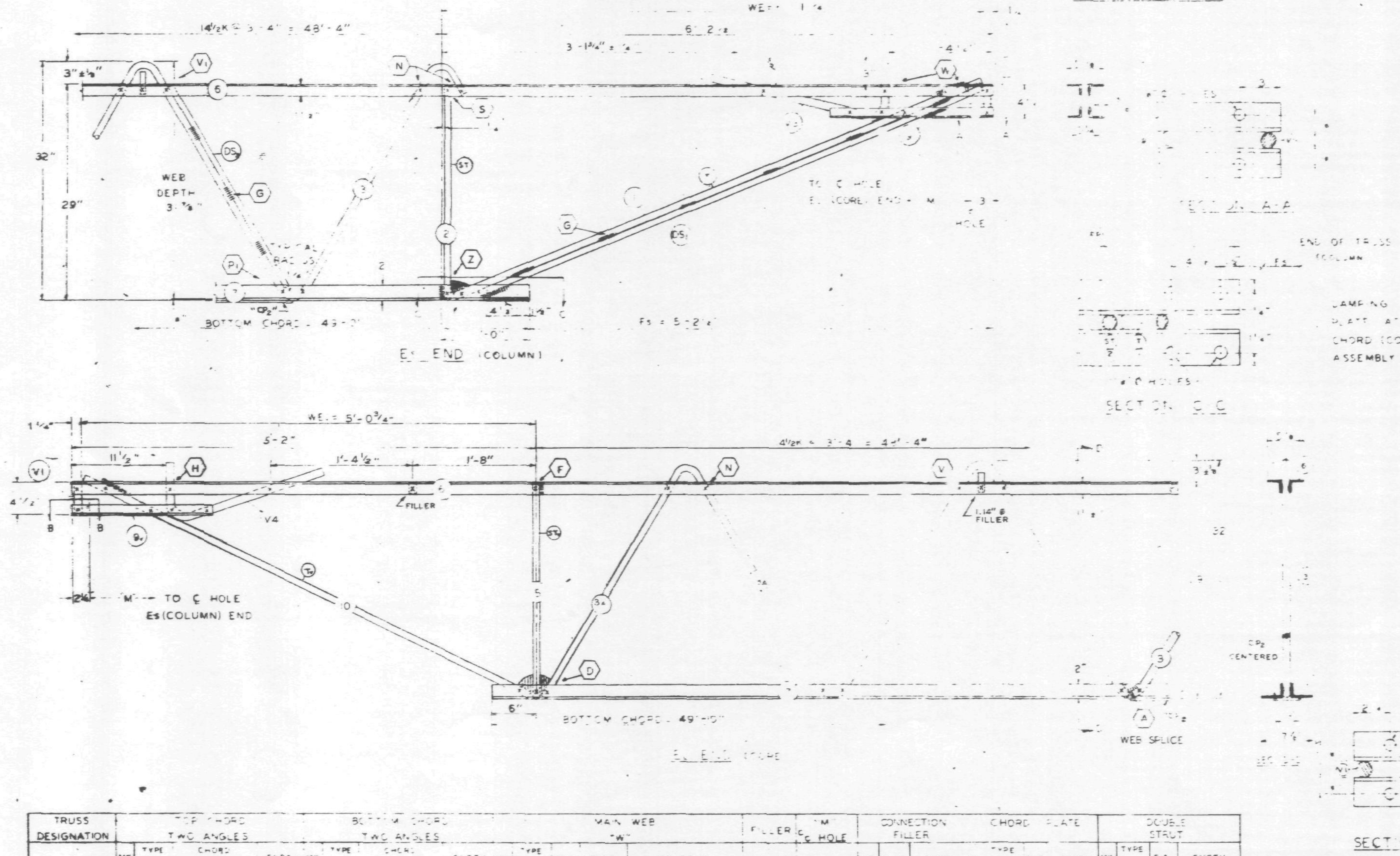

DAMPING UNIT CONNECTION PLATE ATTACHED TO BOTTOM CHORD (COL END) IN FIELD ASSEMBLY BY CONTRACT WTC 223.00.

ALL PANEL POINTS RESISTANCE WELDED
ARC WELDS INDICATED AT SHADED AREAS AND AT BOTTOM CHORD WEB SPLICES
ALL WELD DETAILS SHOWN ON SHEETS ST290, ST291, ST 292, AND ST280.
SEE SHEET ST293 FOR V1, V3, & V4 DETAILS.
CHORD PLATE DETAILS SHOWN ON SHEET ST280.
LETTERS IN HEXAGON INDICATE WELD DETAIL, ie., (A).
LETTERS AND NUMBERS IN SQUARES INDICATE RESISTANCE WELD STRENGTH IDENTIFIED IN THE QUALITY CONTROL PROGRAM, ie., [R6].

FABRICATION [illegible]	DESIGN	TOLERANCE
CAMBER AT MIDSPAN	2"	[illegible]
DESIGN DEPTH	30"	[illegible]
PANEL "K"		± 1/4
OVERALL LENGTH	59'-8 1/2"	± 3/8
WEB DEPTH	31 7/8"	± 1/4"

NO.	DATE	REVISION	BY

REF DRWGS

7-AB1-5	10-15-68
7-AB1-52	2-15-68
7-AB1-53	7-22-68
7-AB4-50	8-1-68
7-AB3-2	1-3-68
7-AB4-50.5	10-20-67

PAINT
LACLEDE ELECTROPRIMER
RED NO 1000

TRUSS DESIGNATION	TOP CHORD TWO ANGLES				BOTTOM CHORD TWO ANGLES				MAIN WEB "W"					FILLER		"M" C-C HOLE	CONNECTION FILLER			CHORD PLATE				DOUBLE STRUT			
	MK	TYPE STEEL	CHORD SIZE	LENGTH	MK	TYPE STEEL	CHORD SIZE	LENGTH	MK	TYPE STEEL	DIA	LENGTH	NO OF K	NO	DIA		NO	DIA	LENGTH	MK	TYPE STEEL	SIZE	LENGTH	MK	TYPE STEEL	DIA	LENGTH
C32T8B-598.5	6	A242	2" x [illegible]	59'-8 1/2"	7	A36	3 x 2 x 3[illegible]	49'-10"	3 / 3A	A36 / A242	1.09 / 1.14	78'-3 3/4" / [illegible]-5 1/2"	12 1/2K @ 3'-4" = 41'-8" / 2K @ 3'-4" = 6'-8"	11	1.09	59'-3 [illegible]"	3 / 1	1.09" / 1.14	3" / 3"	CP2	A36	4x3	40'-0"	DS3	A242	.75	2'-6 3/4"

COLUMN END

Es END	TRUSS DESIGNATION	BEARING ANGLES				WE	DIAGONAL "T" STRUT				VERTICAL "ST" STRUT				END STIFFENER MK V1			END STIFFENER MK V3			DOUBLE STRUT			
		MK	TYPE STEEL	CHORD SIZE	LENGTH		MK	TYPE STEEL	DIA	LENGTH	MK	TYPE STEEL	DIA	LENGTH	TYPE STEEL	DIA	LENGTH	TYPE STEEL	DIA	LENGTH	MK	TYPE STEEL	DIA	LENGTH
	C32T8B-598.5	9	A242	2"x1 1/2"x.25	2'-3"	6'-1 1/4"	1	A36	1.09	6'-3 1/8"	2	A36	1.09	2'-4 7/8"	A36	1.09	4 3/8"	A36		2'-9 1/4"	DS1	A242	.92	6'-3 1/8"

CHECK DIMENSION FOR TRUSS FAB

LOCATION OF TRANS TRUSS				
CL-1	CL-2	CL-3	CL-4	Fs
9'-6 1/2"	22'-10 1/2"	36'-2 1/2"	49'-6 1/2"	5'-2 1/2"

CORE END

Ec END	TRUSS DESIGNATION	BEARING ANGLES				WE	DIAGONAL "T" STRUT				VERTICAL "ST" STRUT				END STIFFENER MK V1			END STIFFENER MK V2			END STIFFENER MK V4			WEB "WC"					WEB "WT"				
		MK	TYPE STEEL	CHORD SIZE	LENGTH		MK	TYPE STEEL	DIA	LENGTH	MK	TYPE STEEL	DIA	LENGTH	TYPE STEEL	DIA	LENGTH	TYPE STEEL	DIA	LENGTH	TYPE STEEL	DIA	LENGTH	MK	TYPE STEEL	PCS	DIA	LENGTH	MK	TYPE STEEL	PCS	DIA	LENGTH
	C32T8B-598.5	9	A242	2"x1 1/2"x.25	1'-6"	5'-0 3/4"	10	A242	1.14	5'-6 7/8"	5	A242	1.14	2'-4 7/8"	A242	1.14	4 1/2"	—	—	—	A242	1.14	2'-2 1/2"	—	—	—	—	—	—	—	—	—	—

STEEL TRUSS DETAILS
FOR
WORLD TRADE CENTER - N.Y.C.
FOR
THE PORT OF NEW YORK AUTHORITY

FLOOR TRUSS C32T8B 59'-8 1/2" OVERALL
WORLD TRADE CENTER TOWER A-B

FABRICATION BY LACLEDE STEEL COMPANY			
FABRICATED AT MADISON, ILLINOIS		DESIGN DRAWING NO. 7-AB1-5 7-A[illegible]	
APPROVED FOR FABRICATION BY [signature] FOR P.O.N.Y.A.	DATE 2/28/69	DRAWN BY [initials] DATE FEB. 10, 1969	
APPROVED FOR FABRICATION BY FOR FABRICATOR	DATE	CHECKED BY T.M. CHUBA DATE FEB. 11, 1969	IN CHARGE OF PROD. REV.
DETAILED [illegible]		FABRICATION CONT NO. WTC 221	SHEET NO. ST208B

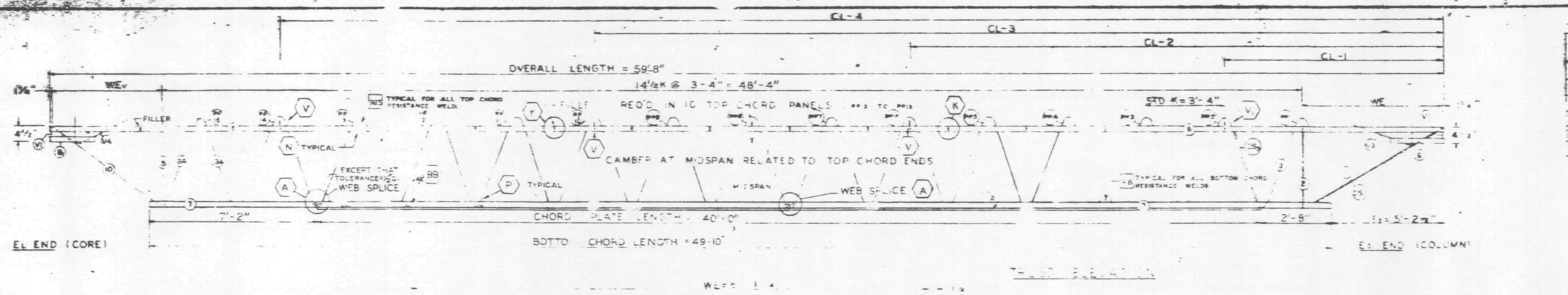

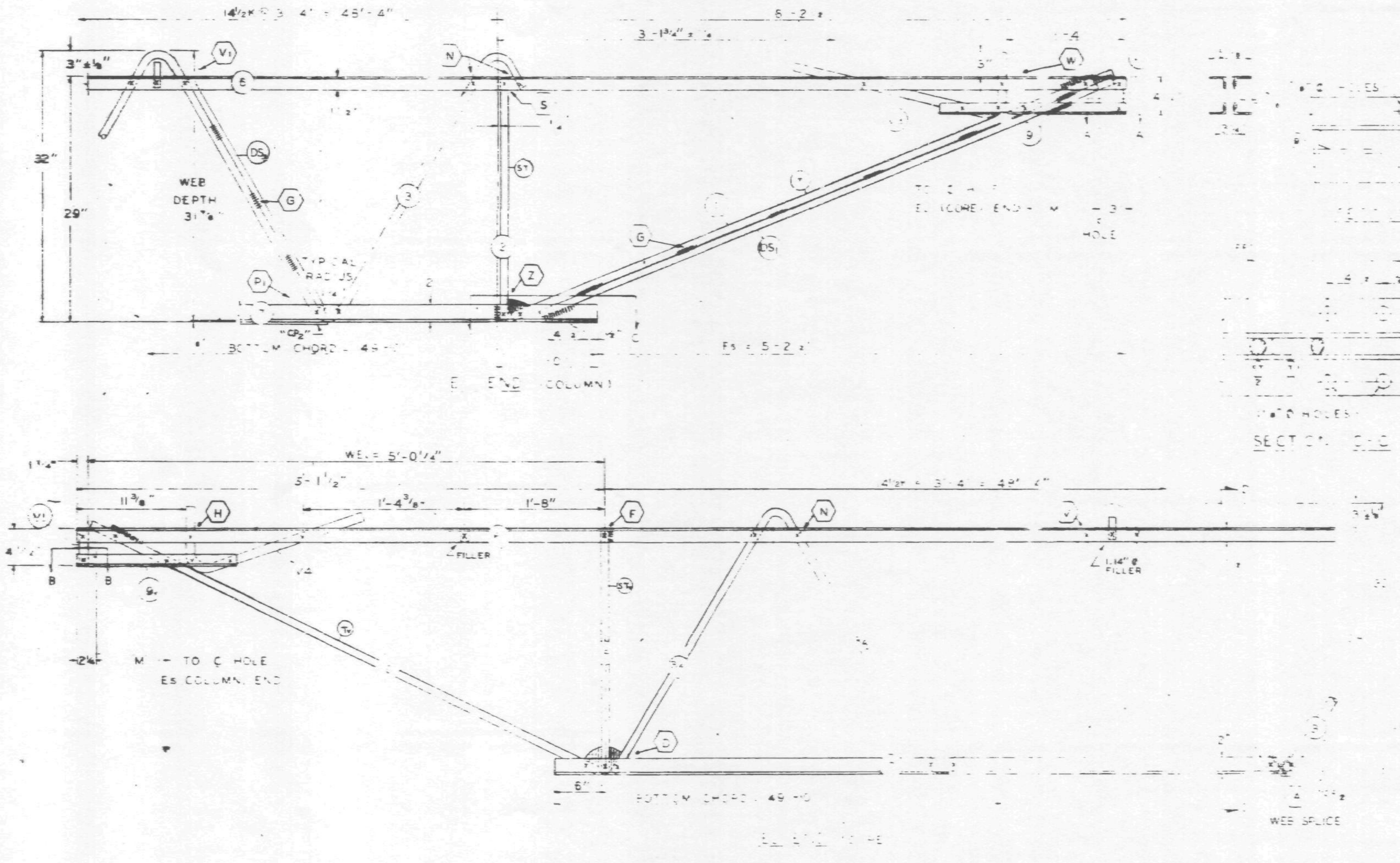

ALL PANEL POINTS RESISTANCE WELDED
ARC WELDS INDICATED AT SHADED AREAS
AND AT BOTTOM CHORD WEB SPLICES
ALL WELD DETAILS SHOWN ON SHEETS ST290, ST291, ST292, AND ST280.
SEE SHEET ST295 FOR V1, V3, & V4 DETAILS.
CHORD PLATE DETAILS SHOWN ON SHEET ST280.
LETTERS IN HEXAGON INDICATE WELD DETAIL, ie., (A).
LETTERS AND NUMBERS IN SQUARES INDICATE RESISTANCE WELD STRENGTH IDENTIFIED IN THE QUALITY CONTROL PROGRAM, ie., [R6].

DAMPING UNIT CONNECTION PLATE ATTACHED TO BOTTOM CHORD (COL END) IN FIELD ASSEMBLY BY CONTRACT WTC 213.00

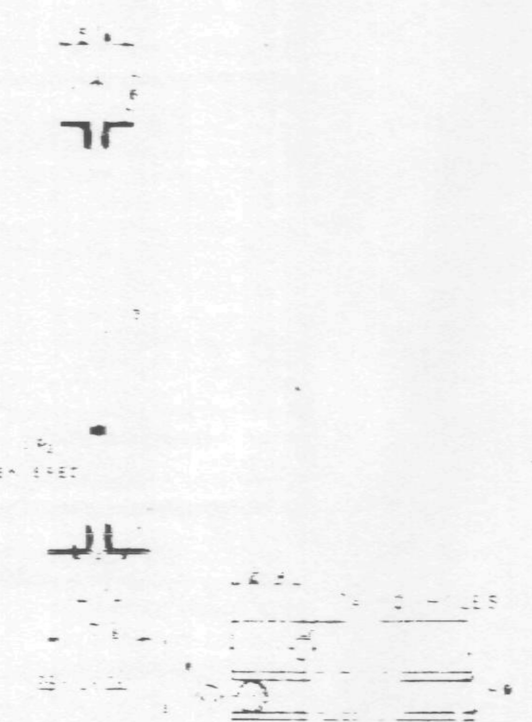

FABRICATION REQUIREMENTS

CAMBER AT MIDSPAN	2"	[illegible]
DESIGN DEPTH		± 1/4"
PANEL "K"	3'-4	± 1/4
OVERALL LENGTH	59'-8"	[illegible]
WEB DEPTH	31 7/8"	1/4"

NO.	DATE	REVISION	BY

REF DWGS

7-AB1-5	10-15-68
7-AB1-52	2-15-68
7-AB1-53	7-22-68
7-AB4-50	8-1-68
7-AB1-2	[illegible]-3-68
7-AB4-50S	10-20-67

TRUSS DESIGNATION	TOP CHORD TWO ANGLES				BOTTOM CHORD TWO ANGLES				MAIN WEB "W"				FILLER	M HOLE		CONNECTION FILLER			CHORD PLATE				DOUBLE STRUT			
	MK	TYPE STEEL	CHORD SIZE	LENGTH	MK	TYPE STEEL	CHORD SIZE	LENGTH	MK	TYPE STEEL	DIA	LENGTH	NO. OF K	NO.	DIA	NO.	DIA	LENGTH	MK	TYPE STEEL	SIZE	LENGTH	MK	TYPE STEEL	DIA	LENGTH
C32T8C-598	6	A242	[illegible]	59'-8"	7	A36	[illegible]	49'-10"	3 / 3A	A36 / A242	1.09 / 1.14	78'-3¾" / [illegible]	12½K @ 3'-4" = 4'-8" / 2K @ 3'-4" [illegible]	11	1.09	59-2¾	3 / 1	1.09" / 1.14	3" / 3"	CP2	A36	[illegible]	40'-0"	DS1	A242	.75	2'-6¾"

COLUMN END

Es END	TRUSS DESIGNATION	BEARING ANGLES				WE	DIAGONAL "T" STRUT				VERTICAL "ST" STRUT				END STIFFENER MK V1			MK V3			DOUBLE STRUT			
		MK	TYPE STEEL	CHORD SIZE	LENGTH		MK	TYPE STEEL	DIA	LENGTH	MK	TYPE STEEL	DIA	LENGTH	TYPE STEEL	DIA	LENGTH	TYPE STEEL	DIA	LENGTH	MK	TYPE STEEL	DIA	LENGTH
	C32T8C-598	9	A242	2"x1½"x.25	2'-3"	5'-1¼"		A36	1.09	6'-3⅛"	2	A36	1.09	2'-4⅞"	A36	1.09	4⅝"	A36	[illegible]	[illegible]	DS	A242	.92	6'-3⅛"

CHECK DIMENSION FOR TRUSS FAB LOCATION OF TRANS TRUSS

CL-1	CL-2	CL-3	CL-4	Es
9'-6½"	22'-10½"	36'-2½"	49'-6½"	5'-2½"

CORE END

EL END	TRUSS DESIGNATION	BEARING ANGLES				WE	DIAGONAL "T" STRUT				VERTICAL "ST" STRUT				END STIFFENER MK V1			MK V2			MK V4			WEB "WC"					WEB "WT"				
		MK	TYPE STEEL	CHORD SIZE	LENGTH		MK	TYPE STEEL	DIA	LENGTH	MK	TYPE STEEL	DIA	LENGTH	TYPE STEEL	DIA	LENGTH	TYPE STEEL	DIA	LENGTH	TYPE STEEL	DIA	LENGTH	MK	TYPE STEEL	PCS	DIA	LENGTH	MK	TYPE STEEL	PCS	DIA	LENGTH
	C32T8C-598	9	A242	2"x1½"x.25	1'-6"	5'-0¼"	10	A242	1.14	5'-5½"	5	A242	1.14	2'-4⅞"	A242	1.14	4½"	—	—	—	A242	1.14	2'-2½"	—	—	—	—	—	—	—	—	—	—

LACLEDE ELECTRIC [illegible]
REF [illegible]

STEEL TRUSS DETAILS
FOR
WORLD TRADE CENTER N.Y.C.
FOR
THE PORT OF NEW YORK AUTHORITY

FLOOR TRUSS C32T8C 59'-8" OVERALL
WORLD TRADE CENTER TOWER A-B

FABRICATION BY LACLEDE STEEL COMPANY

FABRICATED AT MADISON, ILLINOIS		DESIGN DRAWING NO. 7-AB1-5 7-AB1-2	PLATE
APPROVED FOR FABRICATION BY ... FOR PONYA	DATE 2/28/69	DRAWN BY [illegible] DATE FEB. 10, 1969	
APPROVED FOR FABRICATION BY ... FOR FABRICATOR	DATE	CHECKED BY T.M.CHURA DATE FEB. 11, 1969	IN CHARGE OF PROD. DEV.
DETAILED BY [illegible]		FABRICATION CONT NO WTC 221	SHEET NO. ST208 C

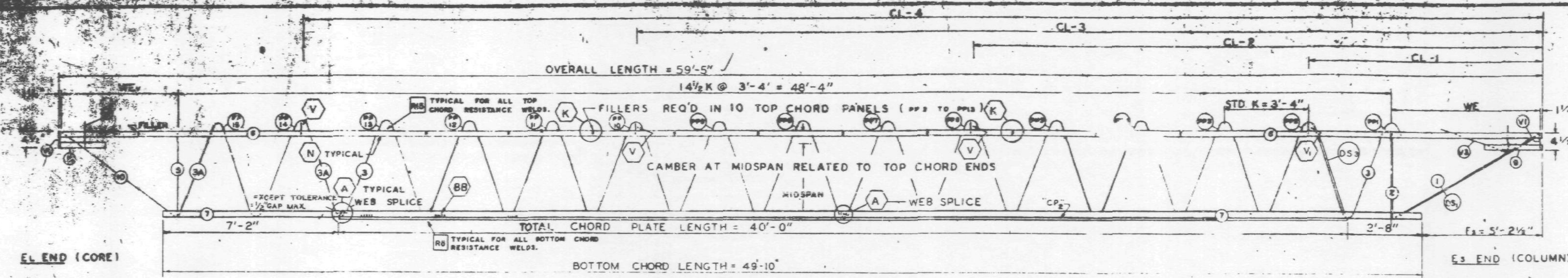

TRUSS ELEVATION

FABRICATION REQUIREMENTS	DESIGN	TOLERANCE
CAMBER AT MIDSPAN	2"	± 3/8"
DESIGN DEPTH	29"	± 1/4"
PANEL "K"	3'-4"	± 1/4"
OVERALL LENGTH	59'-5"	± 3/8"
WEB DEPTH	31 7/8"	± 1/4"

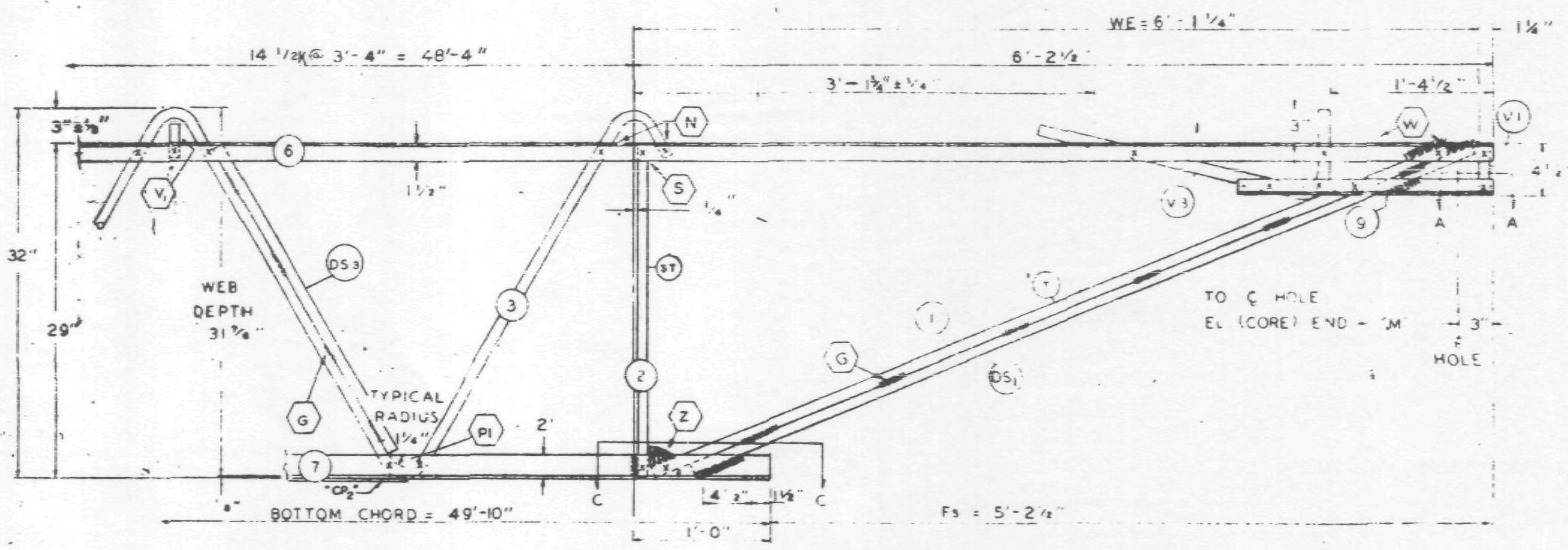

Es END (COLUMN)

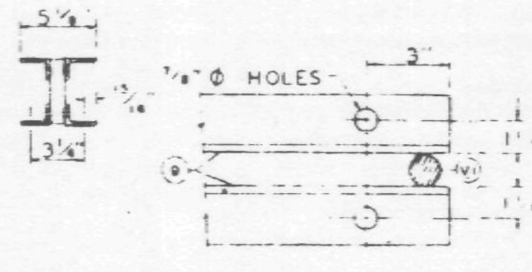

SECTION A-A

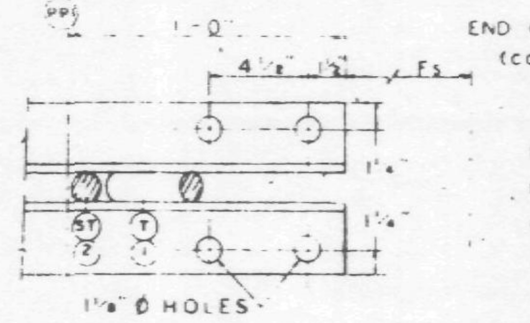

SECTION C-C

ALL PANEL POINTS RESISTANCE WELDED (X). ARC WELDS INDICATED AT SHADED AREAS AND AT BOTTOM CHORD WEB SPLICES. ALL WELD DETAILS SHOWN ON SHEETS ST290, ST291, ST292, AND ST280.

CHORD PLATE DETAILS SHOWN ON SHEET ST280. SEE SHEET ST295 FOR V1, V2, & V3 DETAILS. LETTERS IN HEXAGON INDICATE WELD DETAIL, ie., (A). LETTERS AND NUMBERS IN SQUARES INDICATE RESISTANCE WELD STRENGTH IDENTIFIED IN THE QUALITY CONTROL PROGRAM, ie., R6.

DAMPING UNIT CONNECTION PLATE ATTACHED TO BOTTOM CHORD (COL END) IN FIELD ASSEMBLY BY CONTRACT WTC 223.00.

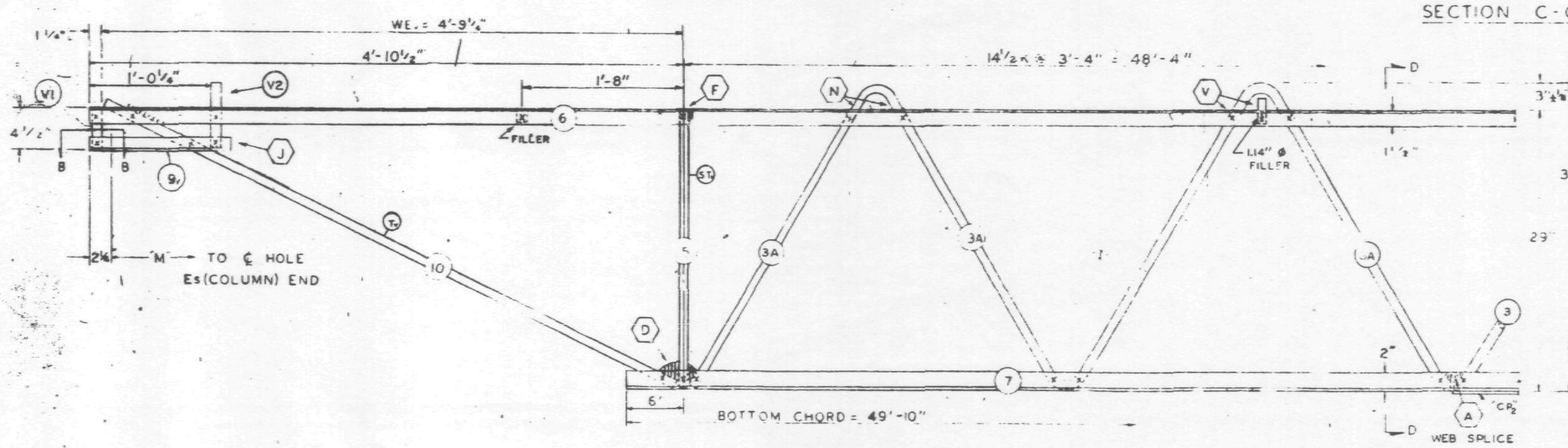

EL END (CORE)

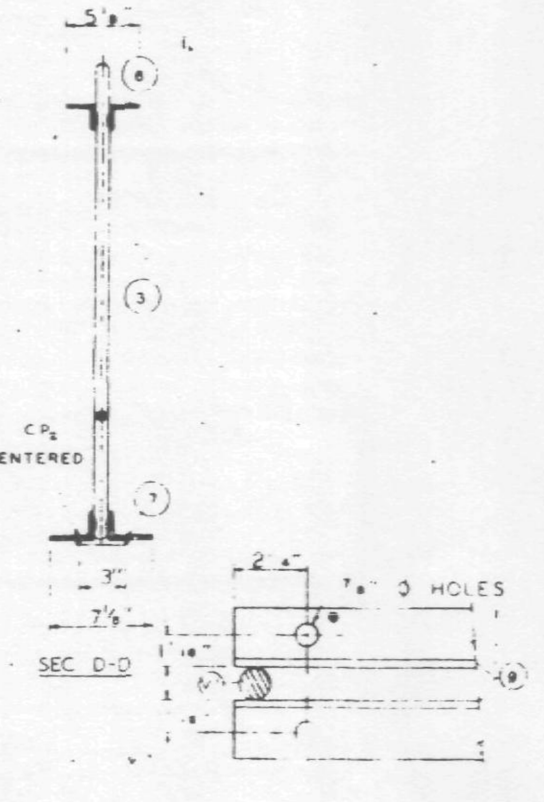

SECTION B-B

NO.	DATE	REVISION	BY

REF DRWGS

7-ABI-5	10-15-68
7-ABI-52	2-15-68
7-ABI-53	7-22-68
7-AB4 3	8-1-68
7-AB3-2	1-3-68
7-AB4-50 5	10-20-67

PAINT
LACLEDE ELECTROCOAT
RED NO. 10001

TRUSS DESIGNATION	TOP CHORD TWO ANGLES MK	TYPE STEEL	CHORD SIZE	LENGTH	BOTTOM CHORD TWO ANGLES MK	TYPE STEEL	CHORD SIZE	LENGTH	MAIN WEB "W" MK	TYPE STEEL	DIA	LENGTH	NO OF K	FILLER NO	DIA	"M" ℄ HOLE	CONNECTION FILLERS NO	DIA	LENGTH	CHORD PLATE MK	TYPE STEEL	SIZE	LENGTH	DOUBLE STRUT MK	TYPE STEEL	DIA	LENGTH
C32T8D 595	6	A242	2"x1½"x .31	59'-5"	7	A36	3"x2"x .33	49'-10"	3 3A	A36 A242	1.09 1.14	78'-3¾" 12'-5½"	12½ @ 3'-4" = 41'-8" 2 @ 3'-4" = 6'-8"	11	1.09	58'-11¾"	3 1	1.09 1.14	3" 3"	CP2	A36	¼x3	40'-0"	DS3	A242	.75	2'-6¾"

COLUMN END

Es END TRUSS DESIGNATION	BEARING ANGLES MK	TYPE STEEL	CHORD SIZE	LENGTH	WE	DIAGONAL "T" STRUT MK	TYPE STEEL	DIA	LENGTH	VERTICAL "ST" STRUT MK	TYPE STEEL	DIA	LENGTH	END STIFFENER MK. V1 TYPE STEEL	DIA	LENGTH	MK. V3 TYPE STEEL	DIA	LENGTH	DOUBLE STRUT MK	TYPE STEEL	DIA	LENGTH
C32T8D 595	9	A242	2"x1½"x .25	2'-3"	6'-1¼"	1	A36	1.09	6'-3⅛"	2	A36	1.09	2'-4⅜"	A36	1.09	4⅜"	A36	1.09	2'-9½"	DS1	A242	.92	6'-3⅛"

CHECK DIMENSION FOR TF SS FAB. LOCATION OF TRANS. TRUSS

CL-1	CL-2	CL-3	CL-4	Fs
9'-6½"	22'-10½"	36'-2½"	49'-6½"	5'-2½"

CORE END

EL END TRUSS DESIGNATION	BEARING ANGLES MK	TYPE STEEL	CHORD SIZE	LENGTH	WEv	DIAGONAL "Tv" STRUT MK	TYPE STEEL	DIA	LENGTH	VERTICAL "STv" STRUT MK	TYPE STEEL	DIA.	LENGTH	END STIFFENER MK. V1 TYPE STEEL	DIA	LENGTH	MK. V2 TYPE STEEL	DIA.	LENGTH	MK. V4 TYPE STEEL	DIA.	LENGTH	WEB "Wc" MK	TYPE STEEL	PCS	DIA	LENGTH	WEB "WT" MK	TYPE STEEL	PCS	DIA.	LENGTH
C32T8D 595	9	A242	2"x1½"x .25	1'-2½"	4'-9⅞"	10	A242	1.14	5'-3"	3	A242	1.14	2'-4⅞"	A242	1.14	4⅞"	A242	1.14	7⅞"	—	—	—	—	—	—	—	—	—	—	—	—	—

STEEL TRUSS DETAILS
FOR
WORLD TRADE CENTER - N.Y.C.
FOR
THE PORT OF NEW YORK AUTHORITY

FLOOR TRUSS C32T8D 59'-5" OVERALL
WORLD TRADE CENTER TOWER A-B

FABRICATION BY LACLEDE STEEL COMPANY
FABRICATED AT MADISON, ILLINOIS
DESIGN DRAWING NO. 7-ABI-5 7-AB3-2 PLATE
APPROVED FOR FABRICATION FOR PONYA James White DATE 4/25/69
DRAWN BY [illegible] DATE APRIL 15, 1969
APPROVED FOR FABRICATION BY FOR FABRICATOR DATE
CHECKED BY T.M.CHURA DATE APRIL 15, 1969
IN CHARGE OF PROD. DEV
DETAILED LACLEDE STEEL CO.
FABRICATION CONT NO WTC 221
SHEET NO. ST2[illegible]

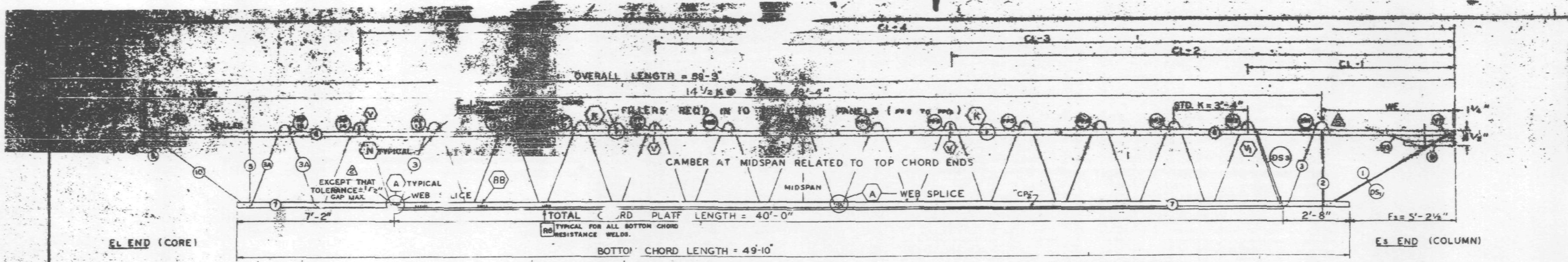

TRUSS ELEVATION

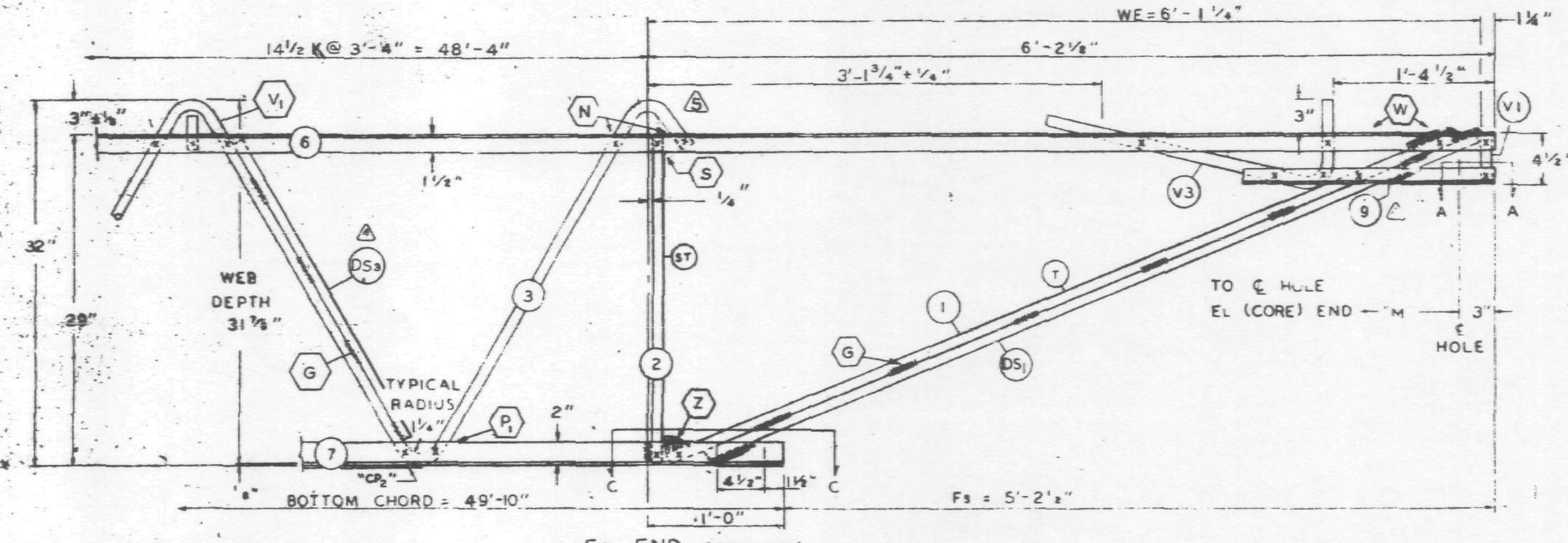

Es END (COLUMN)

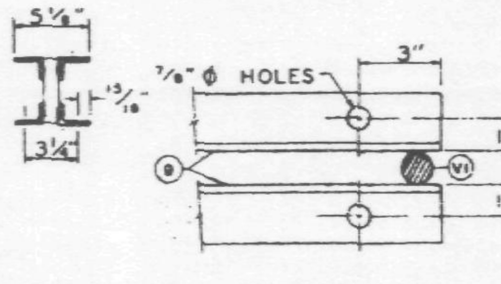

SECTION A-A

ALL PANEL POINTS RESISTANCE WELDED (x).
ARC WELDS INDICATED AT SHADED AREAS
AND AT BOTTOM CHORD WEB SPLICES (▬)
ALL WELD DETAILS SHOWN ON SHEETS ST290, ST291, ST292, AND ST280.
SEE SHEET ST295 FOR V1, V2, & V3 DETAILS.
CHORD PLATE DETAILS SHOWN ON SHEET ST280.
LETTERS IN HEXAGON INDICATE WELD DETAIL, ie., ⟨A⟩.
LETTERS AND NUMBERS IN SQUARES INDICATE RESISTANCE WELD STRENGTH IDENTIFIED IN THE QUALITY CONTROL PROGRAM, ie., [R6].

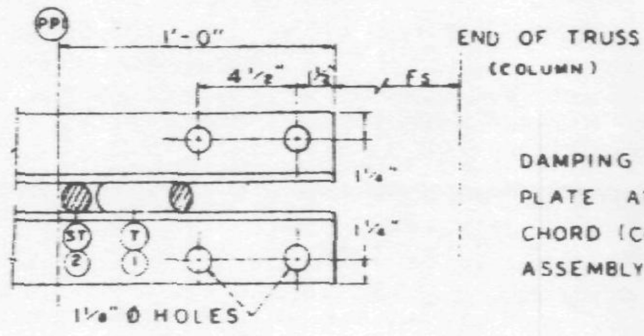

SECTION C-C

DAMPING UNIT CONNECTION PLATE ATTACHED TO BOTTOM CHORD (COL END) IN FIELD ASSEMBLY BY CONTRACT WTC 223.00.

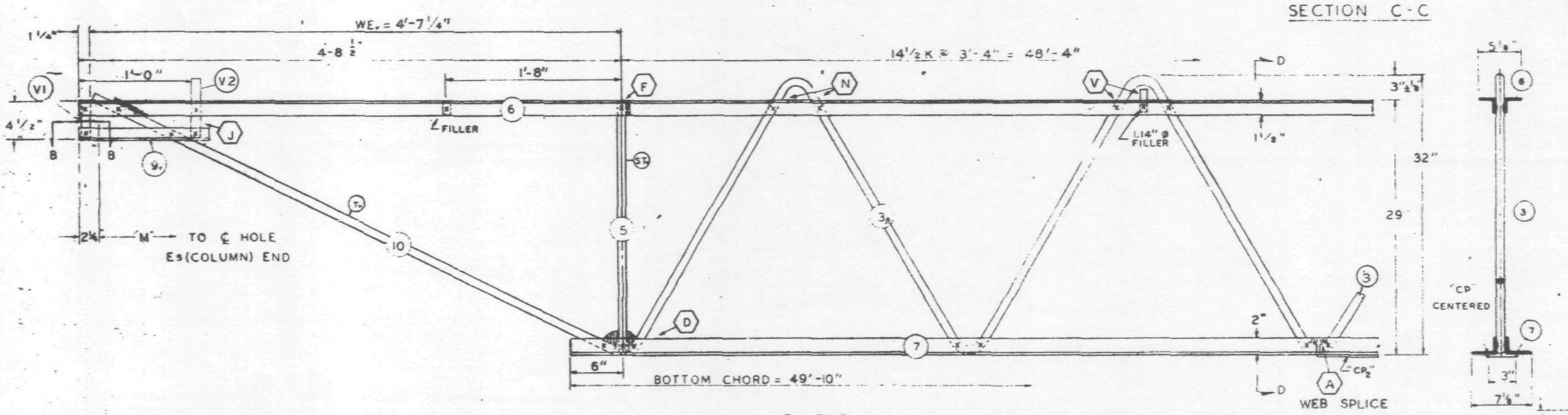

EL END (CORE)

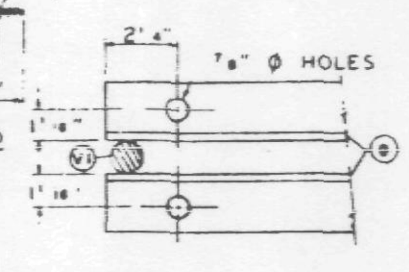

SECTION B-B

FABRICATION REQUIREMENTS	DESIGN	TOLERANCE
CAMBER AT MIDSPAN	2"	[illegible]
DESIGN DEPTH	29"	± 1/4"
PANEL "K"	3'-4"	± 1/4"
OVERALL LENGTH	59'-3"	± 3/8"
WEB DEPTH	[illegible]	± 1/4"

NO.	DATE	REVISION	BY
5	12-12-68	AS NOTED	D.C.C.
4	7-22-68	MK (9) LENGTH & DS3 LENGTH	T.M.C.
3	7-8-68	TOLERANCE, WEB SPLICE	T.M.C.
2	6-27-68	AS NOTED	T.M.C.
1	6-22-68	GENERAL	T.M.C.

5 REF DRWGS

7-AB1-5	10-15-68
7-AB1-52	2-15-68
7-AB1-53	7-22-68
7-AB4-50	8-1-68
7-AB3-2	1-3-68
7-AB4-50.5	10-20-67

PAINT
LACLEDE ELECTROCOAT
RED NO. 10001

TRUSS DESIGNATION	TOP CHORD TWO ANGLES				BOTTOM CHORD TWO ANGLES				MAIN WEB "W"					FILLER		"M" C-C HOLE	CONNECTION FILLERS			CHORD PLATE				DOUBLE STRUT			
	MK	TYPE STEEL	CHORD SIZE	LENGTH	MK	TYPE STEEL	CHORD SIZE	LENGTH	MK	TYPE STEEL	DIA.	LENGTH	NO. OF K	NO	DIA.		NO.	DIA.	LENGTH	MK	TYPE STEEL	SIZE	LENGTH	MK	TYPE STEEL	SIZE	LENGTH
C32T8E-593	6	A242	2"x1½"x.31	59'-3"	7	A36	3"x2"x.33	49'-10"	3 / 3A	A36 / A242	1.09 / 1.14	[illegible] / 12'-5½"	12½@3'-4" = 41'-8" / 2 @ 3'-4" = 6'-8"	11	1.09	58-9¾	3 / 1	1.09 / 1.14	3" / 3"	CP2	A36	¼x3	40'-0"	DS3	A242	.75	2'-6¾"

COLUMN END

Es END	TRUSS DESIGNATION	BEARING ANGLES				WE	DIAGONAL "T" STRUT				VERTICAL "ST" STRUT				END STIFFENER MK. V1			END STIFFENER MK. V3			DOUBLE STRUT			
		MK	TYPE STEEL	CHORD SIZE	LENGTH		MK	TYPE STEEL	DIA	LENGTH	MK	TYPE STEEL	DIA.	LENGTH	TYPE STEEL	DIA	LENGTH	TYPE STEEL	DIA	LENGTH	MK	TYPE STEEL	DIA	LENGTH
	C32T8E-593	9	A242	2"x1½"x.25	2'-3"	6'-1¼"	1	A36	1.09	6'-3¼"	2	A36	1.09	2'-4⅜"	A36	1.09	4⅜"	A36	1.09	2'-9½"	DS1	A242	.92	6'-3⅛"

CHECK DIMENSION FOR TRUSS FAB.

LOCATION OF TRANS. TRUSS				
CL-1	CL-2	CL-3	CL-4	Fs
9'-6½"	22'-10½"	36'-2½"	49'-6½"	5'-2¼"

CORE END

EL END	TRUSS DESIGNATION	BEARING ANGLES				WE	DIAGONAL "T" STRUT				VERTICAL "ST" STRUT				END STIFFENER MK. V1			END STIFFENER MK. V2			END STIFFENER MK. V4			WEB "Wc"					WEB "WT"				
		MK	TYPE STEEL	CHORD SIZE	LENGTH		MK	TYPE STEEL	DIA	LENGTH	MK	TYPE STEEL	DIA.	LENGTH	TYPE STEEL	DIA.	LENGTH	TYPE STEEL	DIA.	LENGTH	TYPE STEEL	DIA.	LENGTH	MK	TYPE STEEL	PCS	DIA	LENGTH	MK	TYPE STEEL	PCS	DIA.	LENGTH
	C32T8E-593	9	A242	2"x1½"x.25	1'-2"	4'-7¼"	10	A242	1.14	5'-1"	5	A242	1.14	2'-4⅞"	A242	1.14	4"	A242	1.14	7"	—	—	—	—	—	—	—	—	—	—	—	—	—

STEEL TRUSS DETAILS
FOR
WORLD TRADE CENTER - N.Y.C.
FOR
THE PORT OF NEW YORK AUTHORITY

FLOOR TRUSS C32T8E 59'-3" OVERALL
WORLD TRADE CENTER TOWER A-B

FABRICATION BY LACLEDE STEEL COMPANY
FABRICATED AT MADISON, ILLINOIS
DESIGN DRAWING NO. 7-AB1-5 7-AB3-2 PLATE
APPROVED FOR FABRICATION BY James White FOR PONYA DATE 12/19/68
DRAWN BY: [illegible] DATE FEB. 24, 1968
APPROVED FOR FABRICATION BY FOR FABRICATOR DATE
CHECKED BY J.R. PAUL DATE FEB. 24, 1968
IN CHARGE OF PROD. DEV.
LACLEDE STEEL CO.
DETAILED BY A.C. WEBER
FABRICATION CONT NO W.T.C.-221
SHEET NO.

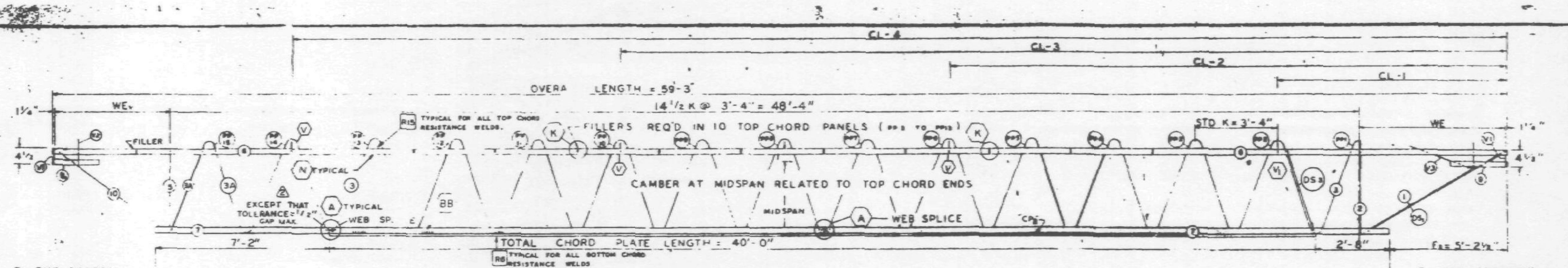

EL END (CORE) — ES END (COLUMN)

TRUSS ELEVATION

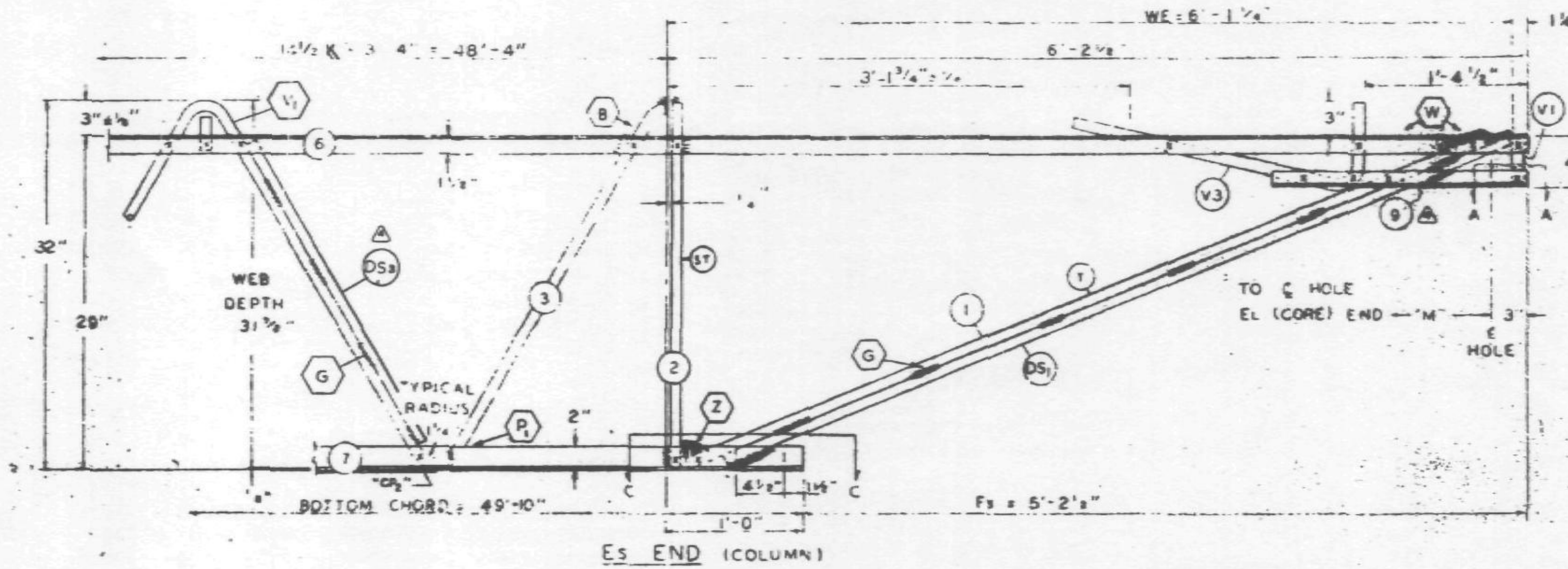

Es END (COLUMN)

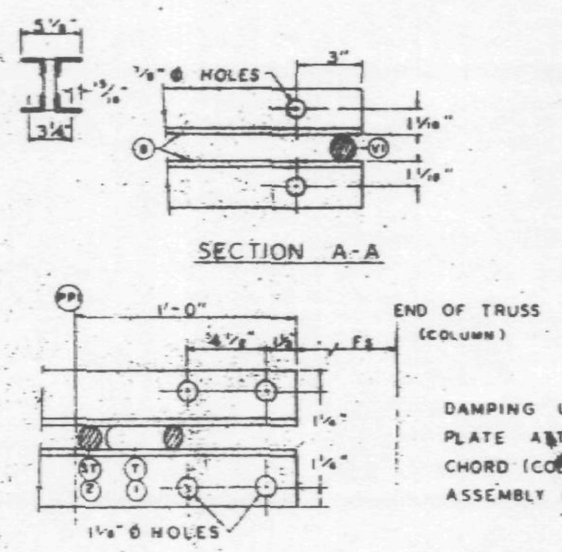

SECTION A-A

SECTION C-C

ALL PANEL POINTS RESISTANCE WELDED x
ARC WELDS INDICATED AT SHADED AREAS
AND AT BOTTOM CHORD WEB SPLICES (▬
ALL WELD DETAILS SHOWN ON SHEETS ST290, ST291, ST292.
AND ST280.
SEE SHEET ST295 FOR V1, V2, & V3 DETAILS.
CHORD PLATE DETAILS SHOWN ON SHEET ST280.
LETTERS IN HEXAGON INDICATE WELD DETAIL, ie., ⟨A⟩.
LETTERS AND NUMBERS IN SQUARES INDICATE RE-
SISTANCE WELD STRENGTH IDENTIFIED IN THE
QUALITY CONTROL PROGRAM, ie., [R6].

DAMPING UNIT CONNECTION
PLATE ATTACHED TO BOTTOM
CHORD (COL END) IN FIELD
ASSEMBLY BY CONTRACT WTC 223.00.

FABRICATION REQUIRMENTS	DESIGN	TOLERANCE
CAMBER AT MIDSPAN	2"	± 3/8"
DESIGN DEPTH	29"	± 1/4"
PANEL "K"	3'-4"	± 1/4"
OVERALL LENGTH	59'-3"	± 3/8"
WEB DEPTH	31 7/8"	± 1/4"

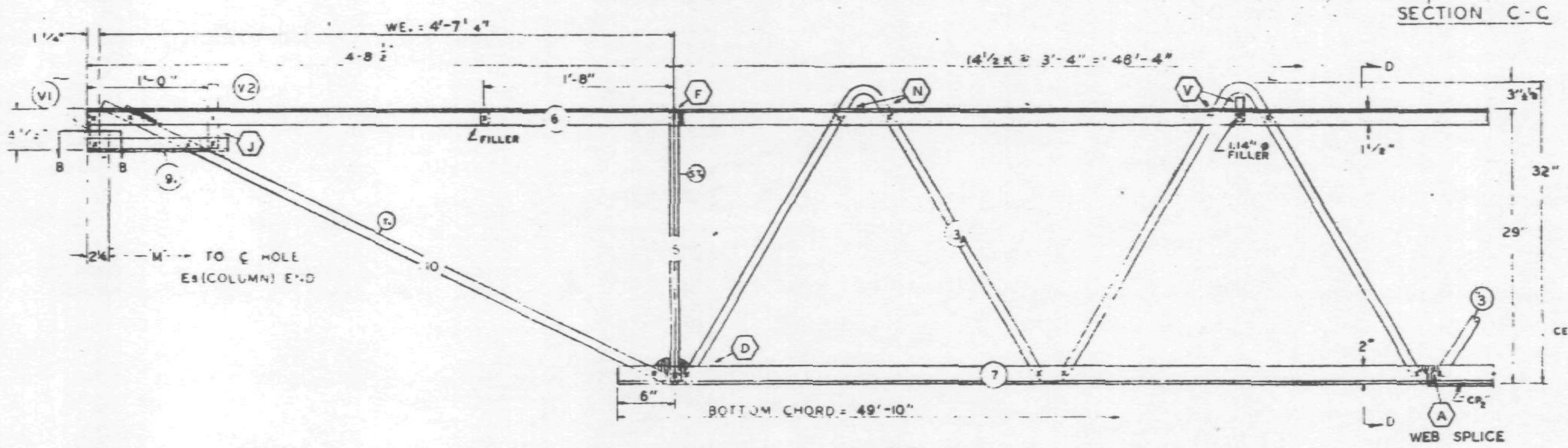

EL END (CORE)

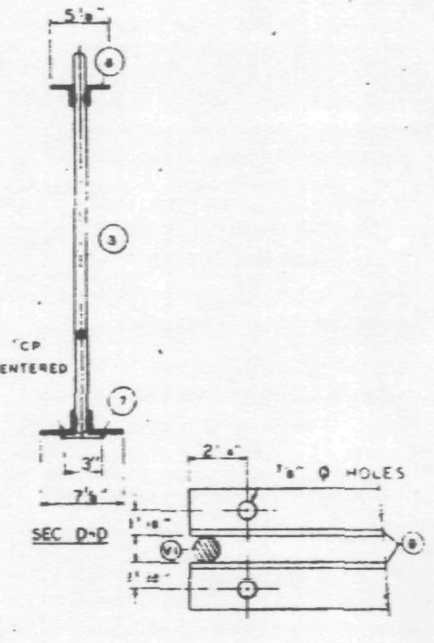

SEC D-D

SECTION B-B

NO	DATE	REVISION	BY
4	7-22-68	MK (9) LENGTH & DS₁ LENGTH	T.M.C.
3	7-8-68	TOLERANCE, WEB SPLICE	T.M.C.
2	6-27-68	AS NOTED	T.M.C.
1	6-22-68	GENERAL	T.M.C.

REF DRWGS

7-AB1-5 4-15-68
7-AB1-52 2-15-68
7-AB1-53 1-3-68
7-AB4-50 & 50 2 10-20-67
7-AB3-2 1-3-68
7-AB4-50 5 10-20-67

PAINT
LACLEDE ELECTROCOAT
RED NO 10001

TRUSS DESIGNATION	TOP CHORD TWO ANGLES				BOTTOM CHORD TWO ANGLES				MAIN WEB "W"					FILLER		"M" ℄ HOLE	CONNECTION FILLERS			CHORD PLATE				DOUBLE STRUT			
	MK	TYPE STEEL	CHORD SIZE	LENGTH	MK	TYPE STEEL	CHORD SIZE	LENGTH	MK	TYPE STEEL	DIA	LENGTH	NO. OF K	NO	DIA		NO	DIA	LENGTH	MK	TYPE STEEL	SIZE	LENGTH	MK	TYPE STEEL	SIZE	LENGTH
C32T8E-593	6	A242	2"x1½"x.31	59'-3"	7	A36	3"x2"x.33	49'-10"	3 3A	A36 A242	1.09 1.14	77'-10¾" 12'-5½"	12½@3'-4" = 41'-8" 2@3'-4" = 6'-8"	11	1.09	56'-9¾"	3 1	1.09 1.14	3" 3"	CP	A36	½x3	40'-0"	DS	A242	.75	2'-6¾"

COLUMN END

Es END	TRUSS DESIGNATION	BEARING ANGLES				WE	DIAGONAL "T" STRUT				VERTICAL "ST" STRUT				END STIFFENER MK. V1			END STIFFENER MK. V3			DOUBLE STRUT			
		MK	TYPE STEEL	CHORD SIZE	LENGTH		MK	TYPE STEEL	DIA	LENGTH	MK	TYPE STEEL	DIA	LENGTH	TYPE STEEL	DIA	LENGTH	TYPE STEEL	DIA	LENGTH	MK	TYPE STEEL	DIA	LENGTH
	C32T8E-593	9	A242	2"x1½"x.25	2'-3"	6'-1¼"	1	A36	1.09	6'-3½"	2	A36	1.09	2'-7⅞"	A36	1.09	4⅝"	A36	1.09	2'-9½"	DS₁	A242	.92	6'-3½"

CHECK DIMENSION FOR TRUSS FAB.

LOCATION OF TRANS. TRUSS				
CL-1	CL-2	CL-3	CL-4	Fs
9'-8½"	22'-10½"	36'-2½"	49'-6½"	5'-2½"

CORE END

EL END	TRUSS DESIGNATION	BEARING ANGLES				WE	DIAGONAL "T" STRUT				VERTICAL "ST" STRUT				END STIFFENER MK. V1			END STIFFENER MK. V2			END STIFFENER MK. V4			WEB "W"					WEB "SV"				
		MK	TYPE STEEL	CHORD SIZE	LENGTH		MK	TYPE STEEL	DIA	LENGTH	MK	TYPE STEEL	DIA	LENGTH	TYPE STEEL	DIA	LENGTH	TYPE STEEL	DIA	LENGTH	TYPE STEEL	DIA	LENGTH	MK	TYPE STEEL	PCS	DIA	LENGTH	MK	TYPE STEEL	PCS	DIA	LENGTH
	C32T8E-593	8	A242	2"x1½"x.25	1'-2"	4'-7¼"	10	A242	1.14	5'-1"	5	A242	1.14	2'-4⅛"	A242	1.14	4"	A242	1.09	[illegible]	—	—	—	—	—	—	—	—	—	—	—	—	—

STEEL TRUSS DETAILS
FOR
WORLD TRADE CENTER - N.Y.C.
FOR
THE PORT OF NEW YORK AUTHORITY

FLOOR TRUSS C32T8E 59'-3" OVERALL
WORLD TRADE CENTER TOWER A-B

FABRICATION BY LACLEDE STEEL COMPANY			
FABRICATED AT MADISON, ILLINOIS		DESIGN DRAWING NO 7-AB1-5 7-AB3-2	PLATE
APPROVED FOR FABRICATION FOR P.O.N.Y.A.	DATE 8/2/68	DRAWN BY [illegible] DATE FEB 24, 1968	
APPROVED FOR FABRICATION BY FOR FABRICATOR	DATE	CHECKED BY J R PAUL DATE FEB 24, 1968	IN CHARGE OF PROD DEV
LACLEDE STEEL CO. A.C. WEBER		FABRICATION CONT NO W.T.C. 221	SHEET NO [illegible]

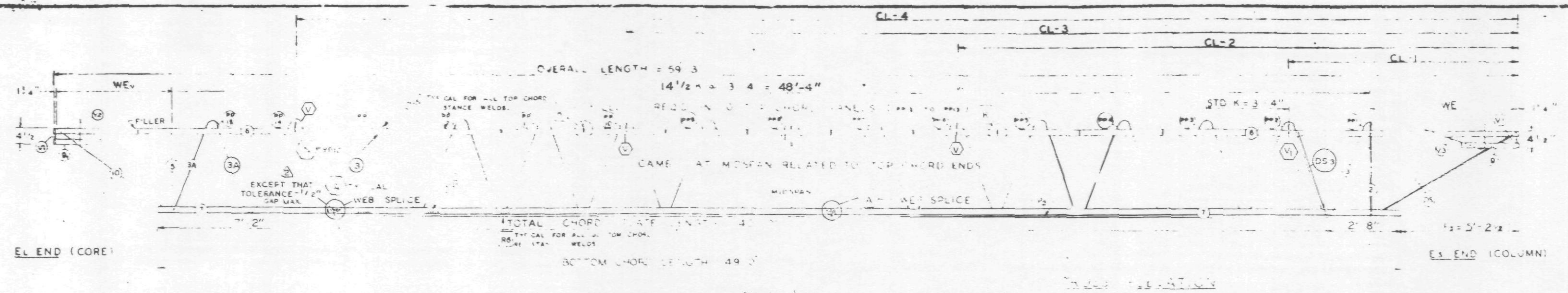

FABRICATION REQUIRMENTS	DESIGN	TOLERANCE
CAMBER AT MIDSPAN	2"	± 3/8"
DESIGN DEPTH		± 1/4"
PANEL "K"	3'-4"	± [illegible]
OVERALL LENGTH	59'-3"	± 3/8"
WEB DEPTH	31 7/8"	± 1/4"

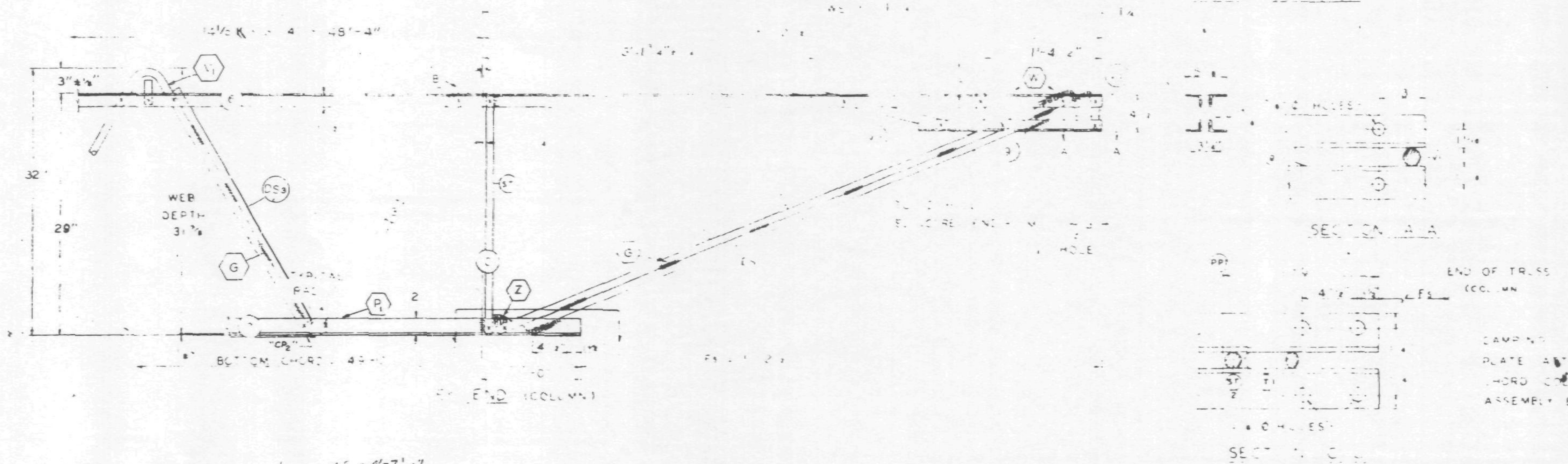

* ALL PANEL POINTS RESISTANCE WELDED x
ARC WELDS INDICATED AT SHADED AREAS
AND AT BOTTOM CHORD WEB SPLICES
ALL WELD DETAILS SHOWN ON SHEETS ST290, ST291, ST292,
AND ST[illegible].
SEE SHEET ST295 FOR V1, V2, & V3 DETAILS.
[illegible] PLATE DETAILS SHOWN ON SHEET ST280.
LETTERS IN HEXAGON INDICATE WELD DETAIL, ie.. (A).
LETTERS AND NUMBERS IN SQUARES INDICATE RE-
SISTANCE WELD STRENGTH IDENTIFIED IN THE
QUALITY CONTROL PROGRAM, ie.. [R6].

DAMPING UNIT CONNECTION
PLATE ATTACHED TO BOTTOM
CHORD [illegible] END IN FIELD
ASSEMBLY BY CONTRACT WTC 223.00.

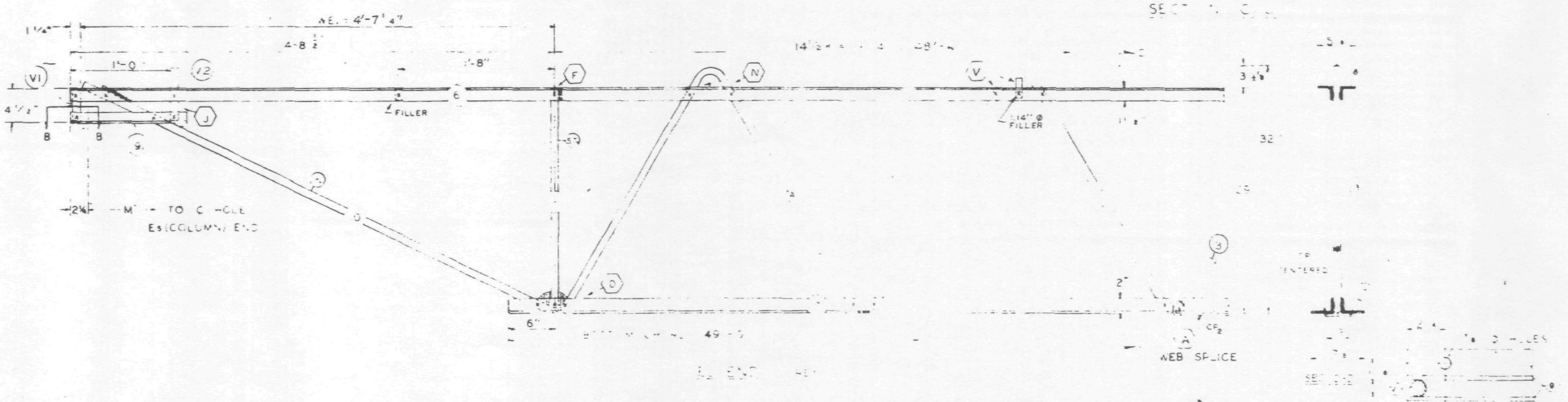

NO	DATE	REVISION	BY
3	7-8-68	TOLERANCE, WEB SPLICE	T.M.C.
2	6-27-68	AS NOTED	T.M.C.
1	6-22-68	GENERAL	T.M.C.

REF DRWGS

7-AB1-5	4-15-68
7-AB1-52	2-15-68
7-AB1-53	1-3-68
7-AB4-50 & 50.2	10-20-67
7-AB3-2	1-3-68
7-AB4-50.5	10-20-67

PAINT
LACLEDE ELECTR[illegible]
RED NO 1000

TRUSS DESIGNATION	TOP CHORD TWO ANGLES MK	TYPE STEEL	CHORD SIZE	LENGTH	BOTTOM CHORD TWO ANGLES MK	TYPE STEEL	CHORD SIZE	LENGTH	MAIN WEB MK	TYPE STEEL	DIA	LENGTH	NO OF K	FILLER NO	DIA	CONNECTION FILLERS NO	DIA	LENGTH	CHORD PLATE MK	TYPE STEEL	SIZE	LENGTH	DOUBLE STRUT MK	TYPE STEEL	SIZE	LENGTH
C32T8E-593	6	A242	2" x [illegible]	59'-3"	[illegible]	A36	3" x 2" x .33	49'-10"	3 / 3A	A36 / A242	1.09 / 1.14	77'-10⅜" / 12'-5½"	12½ @ 3'-4" = 41'-8" / 2 @ 3'-4" = 6'-8"	1	1.09	3 / 1	1.09 / 1.14	[illegible]	CP	A36	[illegible]	40'-0"	DS3	A242	.75	2'-8½"

COLUMN END

Es END TRUSS DESIGNATION	BEARING ANGLES MK	TYPE STEEL	CHORD SIZE	LENGTH	WE	DIAGONAL "T" STRUT MK	TYPE STEEL	DIA	LENGTH	VERTICAL "ST" STRUT MK	TYPE STEEL	DIA	LENGTH	END STIFFENER MK V1 TYPE STEEL	DIA	LENGTH	MK V3 TYPE STEEL	DIA	LENGTH	DOUBLE STRUT MK	TYPE STEEL	SIZE	LENGTH
C32T8E-593	9	A242	2" x 1½" x .25	2'-0"	6'-1¼"	[illegible]	A36	1.09	6'-3⅛"	2	A36	1.09	2'-7⅝"	A36	1.09	4⅝"	A36	1.09	2'-9½"	DS1	A242	.92	6'-3⅛"

CHECK DIMENSION FOR TRUSS FAB LOCATION OF TRANS TRUSS CL-1	CL-2	CL-3	CL-4	Fs
9'-6½"	22'-10½"	36'-2½"	49'-6½"	5'-2½"

CORE END

EL END TRUSS DESIGNATION	BEARING ANGLES MK	TYPE STEEL	CHORD SIZE	LENGTH	WE	DIAGONAL "T" STRUT MK	TYPE STEEL	DIA	LENGTH	VERTICAL "ST" STRUT MK	TYPE STEEL	DIA	LENGTH	END STIFFENER MK V1 TYPE STEEL	DIA	LENGTH	MK V2 TYPE STEEL	DIA	LENGTH	MK V4 TYPE STEEL	DIA	LENGTH	WEB "WC" MK	TYPE STEEL	PCS	DIA	LENGTH	WEB "WT" MK	TYPE STEEL	PCS	DIA	LENGTH
C32T8E-593	9	A242	2" x 1½" x .25	1'-2"	4'-7¼"	10	A242	1.14	5'-1"	5	A242	1.14	2'-4¾"	A242	.4	4⅛"	A242	.14	7⅛"	—	—	—	—	—	—	—	—	—	—	—	—	—

STEEL TRUSS DETAILS
FOR
WORLD TRADE CENTER - N.Y.C.
FOR
THE PORT OF NEW YORK AUTHORITY

FLOOR TRUSS C32T8E 59'-3" OVERALL
WORLD TRADE CENTER TOWER A-B

FABRICATION BY LACLEDE STEEL COMPANY		
FABRICATED AT MADISON, ILLINOIS	DESIGN DRAWING NO. 7-AB1-5 7-AB3-2	PLATE
APPROVED FOR FABRICATION BY JW FOR P.O.N.Y.A. DATE 7/12/68	DRAWN BY [illegible] DATE FEB 24, 1968	
APPROVED FOR FABRICATION BY FOR FABRICATOR DATE	CHECKED BY J.R. PAUL DATE FEB. 24, 1968	IN CHARGE OF PROD. DEV.
DETAILED BY A.C. WEBER	FABRICATION CONT NO WTC 221	SHEET NO. [illegible]

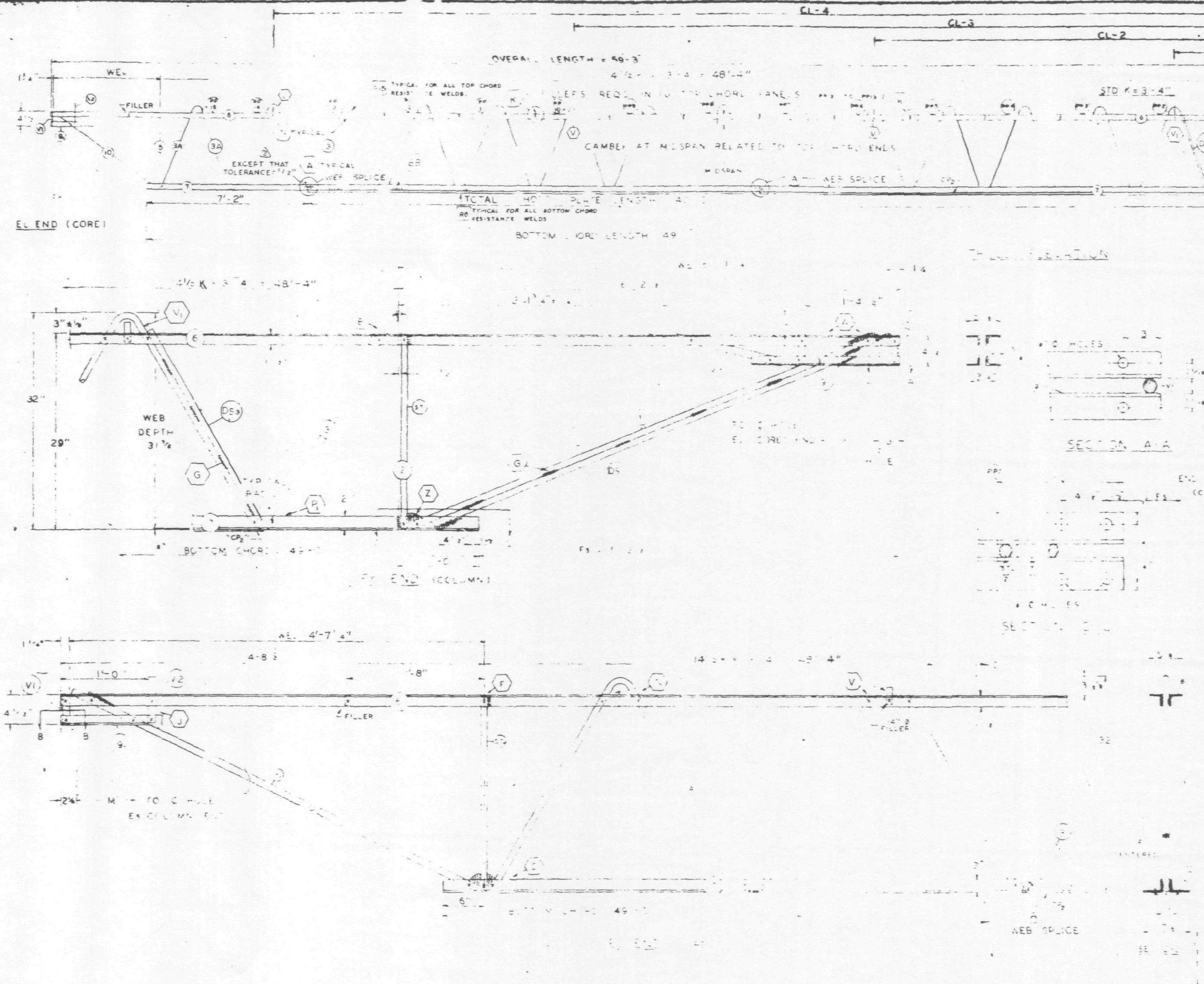

DAMPING UNIT CONNECTION PLATE ATTACHED TO BOTTOM CHORD OF END IN FIELD. ASSEMBLY BY CONTRACT WTC 223.00.

ALL PANEL POINTS RESISTANCE WELDED x ARC WELDS INDICATED AT SHADED AREAS AND AT BOTTOM CHORD WEB SPLICES.
ALL WELD DETAILS SHOWN ON SHEETS ST290, ST291, ST292, AND ST280.
SEE SHEET ST295 FOR V1, V2, & V3 DETAILS.
CHORD PLATE DETAILS SHOWN ON SHEET ST280.
LETTERS IN HEXAGON INDICATE WELD DETAIL, ie.. (A).
LETTERS AND NUMBERS IN SQUARES INDICATE RESISTANCE WELD STRENGTH IDENTIFIED IN THE QUALITY CONTROL PROGRAM, ie.. [R6].

FABRICATION REQUIREMENTS	DESIGN	TOLERANCE
CAMBER AT MIDSPAN	2"	3/8"
DESIGN DEPTH	29"	± 1/4"
PANEL "K"	3'-4"	± 1/4"
OVERALL LENGTH	59'-3"	± 1/2"
WEB DEPTH	31 1/8"	± 1/4"

NO	DATE	REVISION	BY
2	6-27-68	AS NOTED	T.M.C.
1	6-22-68	GENERAL	T.M.C.

REF DRWGS
7-AB1-5 4-15-68
7-AB1-52 2-15-68
7-AB1-53 1-3-68
7-AB4-50 & 50.2 10-20-67
7-AB3-2 1-3-68
7-AB4-50.5 10-20-67

TRUSS DESIGNATION	TOP CHORD TWO ANGLES				BOTTOM CHORD TWO ANGLES			MAIN WEB "TW"						VERTICAL FILLERS							DOUBLE STRUT			
	MK	TYPE STEEL	CHORD SIZE	LENGTH	TYPE STEEL	CHORD SIZE	LENGTH	MK	TYPE STEEL	DIA	LENGTH	NO OF		NO	DIA	LENGTH	MK	TYPE STEEL	SIZE	LENGTH	MK	TYPE STEEL	SIZE	LENGTH
C32T8E-593	6	A242	2" x [illegible]	59'-3"	A36	[illegible] x 33	49'-10"	3 / 3A	A36 / A242	1.09 / 1.14	[illegible]	[illegible]	[illegible]	[illegible]	.09	[illegible]	CP2	A36	[illegible]	40'-0"	DS3	A242	.75	2'-8 1/2"

COLUMN END

Es END	TRUSS DESIGNATION	BEARING ANGLES				WE	DIAGONAL "T" STRUT				VERTICAL "ST" STRUT				END STIFFENER MK. V1			END STIFFENER MK. V3			HOLE STRUT			
		MK	TYPE STEEL	CHORD SIZE	LENGTH		MK	TYPE STEEL	DIA	LENGTH	MK	TYPE STEEL	DIA	LENGTH	TYPE STEEL	DIA	LENGTH	TYPE STEEL	DIA	LENGTH	MK	TYPE STEEL	DIA	LENGTH
	C32T8E-593	9	A242	2"x1 1/2"x.25	2'-0"	6'-1 1/4"		A36	1.09	6'-3 1/8"	2	A36	1.09	2'-7 3/8"	A36	1.09	4 3/8"	A36	1.09	2'-9 1/2"	DS1	A242	.92	6'-3 1/8"

CHECK DIMENSION FOR TRUSS FAB LOCATION OF TRANS TRUSS

CL-1	CL-2	CL-3	CL-4	Fs
9'-6 1/2"	22'-10 1/2"	36'-2 1/2"	49'-6 1/2"	5'-2 1/2"

CORE END

EL END	TRUSS DESIGNATION	BEARING ANGLES				WE	DIAGONAL "T" STRUT				VERTICAL "ST" STRUT				END STIFFENER MK. V1			END STIFFENER MK. V2			END STIFFENER MK. V4			WEB "WC"					WEB "WT"				
		MK	TYPE STEEL	CHORD SIZE	LENGTH		MK	TYPE STEEL	DIA	LENGTH	MK	TYPE STEEL	DIA	LENGTH	TYPE STEEL	DIA	LENGTH	TYPE STEEL	DIA	LENGTH	TYPE STEEL	DIA	LENGTH	MK	TYPE STEEL	PCS	DIA	LENGTH	MK	TYPE STEEL	PCS	DIA	LENGTH
	C32T8E-593	9	A242	2"x1 1/2"x.25	1'-2"	4'-7 1/4"	10	A242	1.14	5'-1"	5	A242	1.14	2'-4 3/4"	A242	1.14	4 1/4"	A242	1.14	7 1/4"	—	—	—	—	—	—	—	—	—	—	—	—	—

STEEL TRUSS DETAILS
FOR
WORLD TRADE CENTER N.Y.C.
FOR
THE PORT OF NEW YORK AUTHORITY

FLOOR TRUSS C32T8E 59'-3" OVERALL
WORLD TRADE CENTER TOWER A-B

FABRICATION BY LACLEDE STEEL COMPANY		
FABRICATED AT MADISON, ILLINOIS	DESIGN DRAWING NO. 7-AB1-5 7-AB3-2 PLATE	
APPROVED FOR FABRICATION FOR PONYA BY JW — DATE 7/5/68	DRAWN BY [illegible] DATE FEB 24, 1968	
APPROVED FOR FABRICATION FOR FABRICATOR BY — DATE	CHECKED BY J R PAUL DATE FEB 24, 1968	IN CHARGE OF PROD DEV 1
DETAILED BY A.C. WEBER	FABRICATION CONT NO W.T.C. 221	SHEET NO. [illegible]

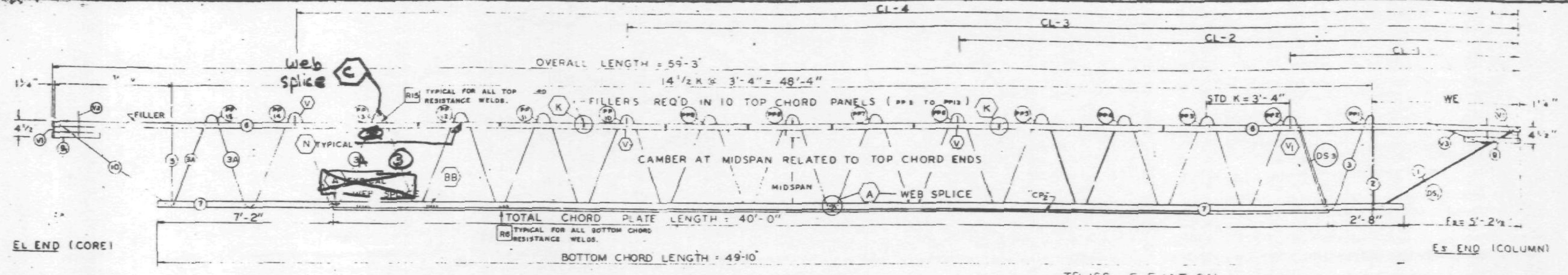

TRUSS ELEVATION

FABRICATION REQUIRMENTS	DESIGN	TOLERANCE
CAMBER AT MIDSPAN	2"	± 3/8"
DESIGN DEPTH	28"	± 1/4"
PANEL "K"	3'-4"	± 1/4"
OVERALL LENGTH	59'-3"	± 3"
WEB DEPTH	31 7/8"	± 1/4"

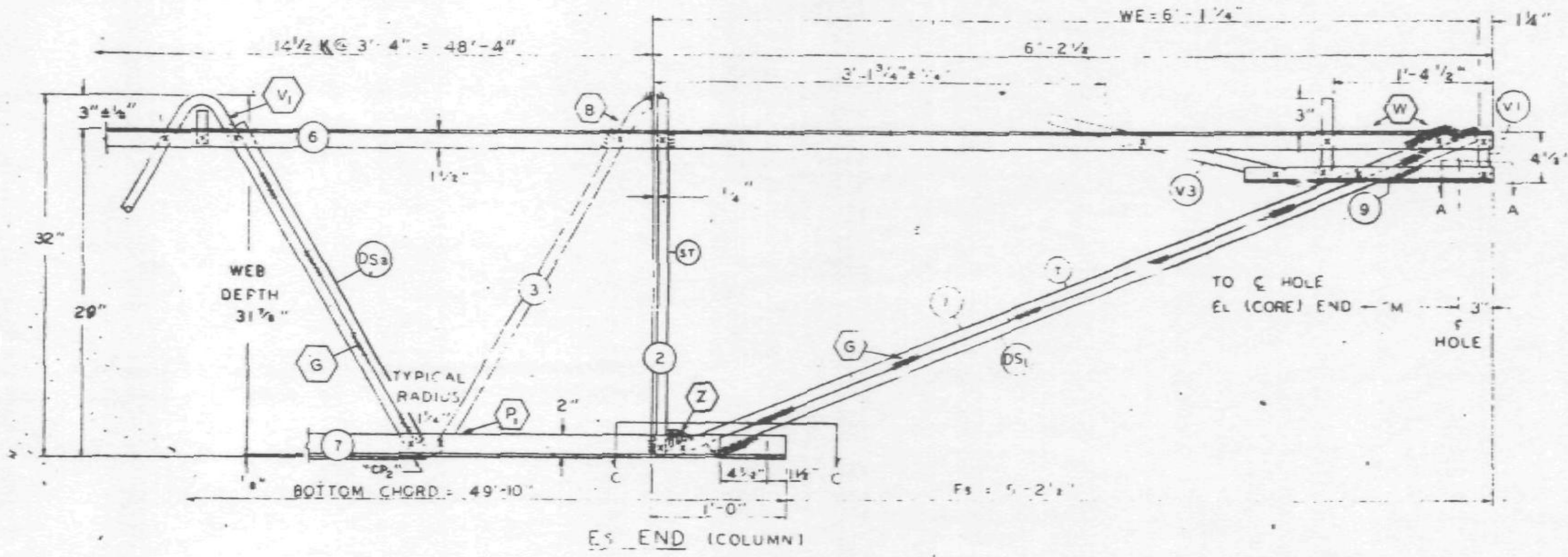

Es END (COLUMN)

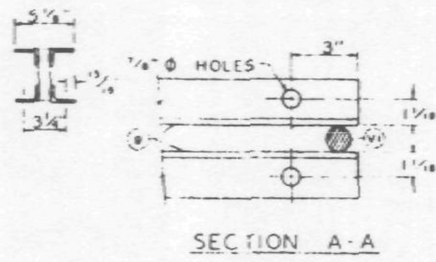

SECTION A-A

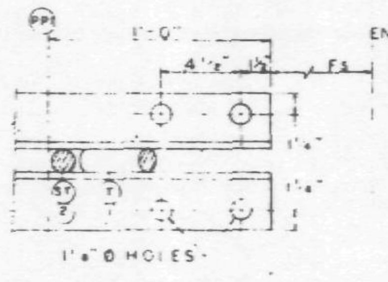

SECTION C-C

ALL PANEL POINTS RESISTANCE WELDED
ARC WELDS INDICATED AT SHADED AREAS
AND AT BOTTOM CHORD WEB SPLICES
ALL WELD DETAILS SHOWN ON SHEETS ST290, ST291, ST292, AND ST280.
SEE SHEET ST295 FOR V1, V2, & V3 DETAILS.
CHORD PLATE DETAILS SHOWN ON SHEET ST280.
LETTERS IN HEXAGON INDICATE WELD DETAIL, ie. (A).
LETTERS AND NUMBERS IN SQUARES INDICATE RESISTANCE WELD STRENGTH IDENTIFIED IN THE QUALITY CONTROL PROGRAM, ie. [R6].

DAMPING UNIT CONNECTION PLATE ATTACHED TO BOTTOM CHORD (COL END) IN FIELD ASSEMBLY BY CONTRACT WTC 223.00.

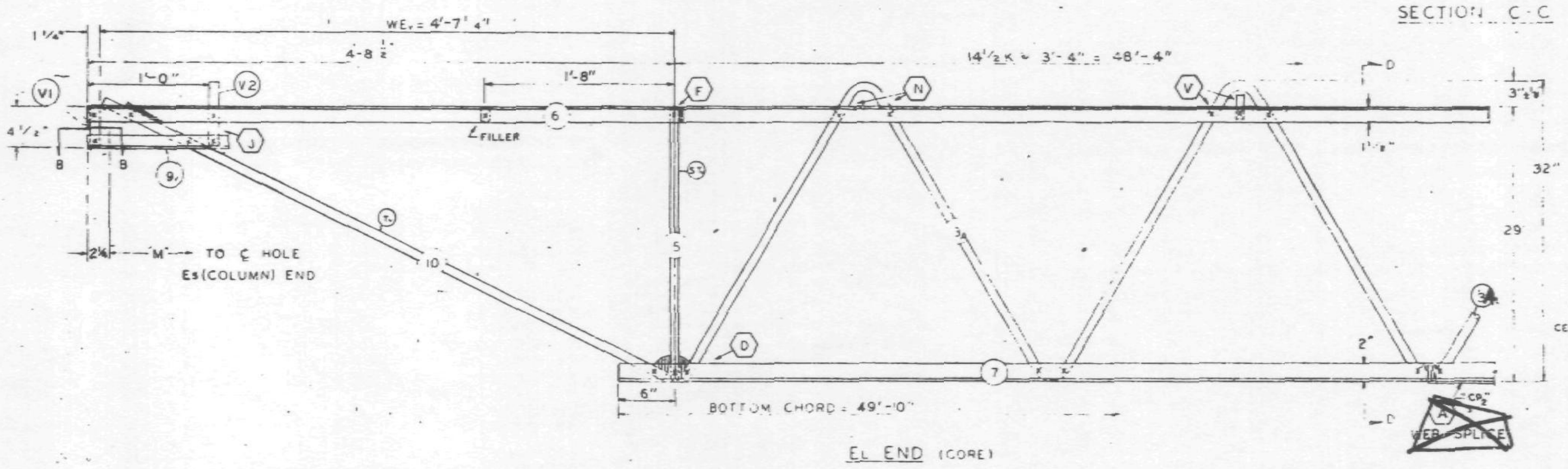

EL END (CORE)

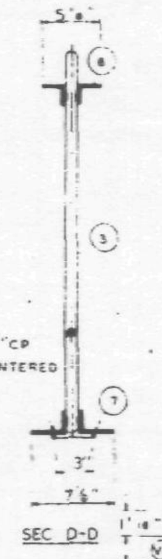

SEC D-D

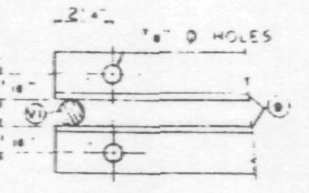

SECTION B-B

NO	DATE	REVISION	BY
1	6-22-68	GENERAL	T.M.C.

REF DRWGS

7-AB1-5	4-15-68
7-AB1-52	2-15-68
7-AB1-53	1-3-68
7-AB4-50 & 50 2	10-20-67
7-AB3-2	1-3-68
7-AB4-50 5	10-20-67

6/25/68 WOB

PAINT
LACLEDE ELECTROCOAT
RED NO 10001

TRUSS DESIGNATION	TOP CHORD TWO ANGLES				BOTTOM CHORD TWO ANGLES				MAIN WEB "W"					FILLER		"M" ℄-℄ HOLE	CONNECTION FILLERS			CHORD PLATE				DOUBLE STRUT			
	MK	TYPE STEEL	CHORD SIZE	LENGTH	MK	TYPE STEEL	CHORD SIZE	LENGTH	MK	TYPE STEEL	DIA	LENGTH	NO OF K	NO	DIA		NO	DIA	LENGTH	MK	TYPE STEEL	SIZE	LENGTH	MK	TYPE STEEL	SIZE	LENGTH
C32T8E-593	6	A242	2"x1½"x .31	59'-3"	7	A36	3"x2"x .33	49'-10"	3 3A	A36 A242	1.09 1.14	77'-10¾ 12'-5½"	12½@3'-4" = 41'-8" 2 @ 3'-4" = 6'-8"	11	1.09	58'-9¾	4 1	1.09 1.14	3" 3"	CP2	A36	½x3	40'-0"	DS3	A242	.75	2'-8½"

COLUMN END

Es END	TRUSS DESIGNATION	BEARING ANGLES				WE	DIAGONAL "T" STRUT				VERTICAL "ST" STRUT				END STIFFENER MK. V1			END STIFFENER MK. V3			DOUBLE STRUT			
		MK	TYPE STEEL	CHORD SIZE	LENGTH		MK	TYPE STEEL	DIA	LENGTH	MK	TYPE STEEL	DIA	LENGTH	TYPE STEEL	DIA	LENGTH	TYPE STEEL	DIA	LENGTH	MK	TYPE STEEL	DIA	LENGTH
	C32T8E-593	9	A242	2"x1½"x.25	2'-0"	6'-1¼"	1	A36	1.09	6'-3⅛"	2	A36	1.09	2'-7⅞"	A36	1.09	4⅜"	A36	1.09	2'-9⅛"	DS1	A242	.92	6'-3⅛"

CHECK DIMENSION FOR TRUSS FAB
LOCATION OF TRANS TRUSS

CL-1	CL-2	CL-3	CL-4	Fs
9'-6½"	22'-10½"	36'-2½"	49'-6½"	5'-2½"

CORE END

EL END	TRUSS DESIGNATION	BEARING ANGLES				WE	DIAGONAL "T" STRUT				VERTICAL "ST" STRUT				END STIFFENER MK. V1			END STIFFENER MK. V2			END STIFFENER MK. V4			WEB "Wc"					WEB "WT"				
		MK	TYPE STEEL	CHORD SIZE	LENGTH		MK	TYPE STEEL	DIA	LENGTH	MK	TYPE STEEL	DIA	LENGTH	TYPE STEEL	DIA	LENGTH	TYPE STEEL	DIA	LENGTH	TYPE STEEL	DIA	LENGTH	MK	TYPE STEEL	PCS	DIA	LENGTH	MK	TYPE STEEL	PCS	DIA	LENGTH
	C32T8E-593	8	A242	2"x1½"x.25	1'-2"	4'-7½"	10	A242	1.14	5'-1	5	A242	1.14	2'-4⅝"	A242	1.14	4⅛	A242	1.14	7⅛	—	—	—	—	—	—	—	—	—	—	—	—	—

STEEL TRUSS DETAILS
FOR
WORLD TRADE CENTER - N Y C
FOR
THE PORT OF NEW YORK AUTHORITY

FLOOR TRUSS C32T8E 59'-3" OVERALL
WORLD TRADE CENTER TOWER A-B

FABRICATION BY LACLEDE STEEL COMPANY

FABRICATED AT MADISON, ILLINOIS		DESIGN DRAWING NO 7-AB1-5 7-AB3-2 PLATE	
APPROVED FOR FABRICATION BY FOR PONYA	DATE	DRAWN BY LL DATE FEB 24, 1968	
APPROVED FOR FABRICATION BY FOR FABRICATOR	DATE	CHECKED BY J R PAUL DATE FEB. 24, 1968	IN CHARGE OF PROD DEV
DETAILED BY A C WEBER		FABRICATION CONT NO W.T.C. 221	SHEET NO. ST208E

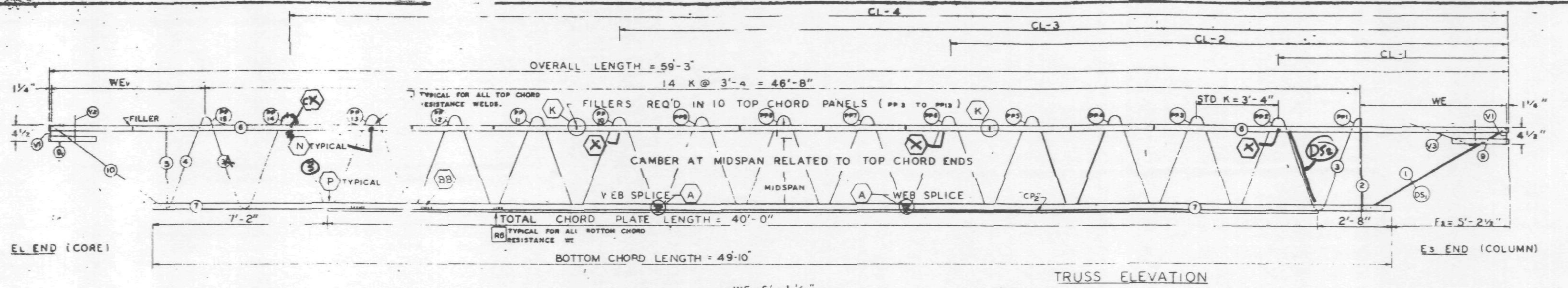

TRUSS ELEVATION

FABRICATION REQUIRMENTS	DESIGN	TOLERANCE
CAMBER AT MIDSPAN	1"	± 3/8"
DESIGN DEPTH	29"	± 1/4"
PANEL "K"	3'-4"	± 1/4"
OVERALL LENGTH	59'-3"	3/8"
WEB DEPTH	31 7/8"	± 1/4"

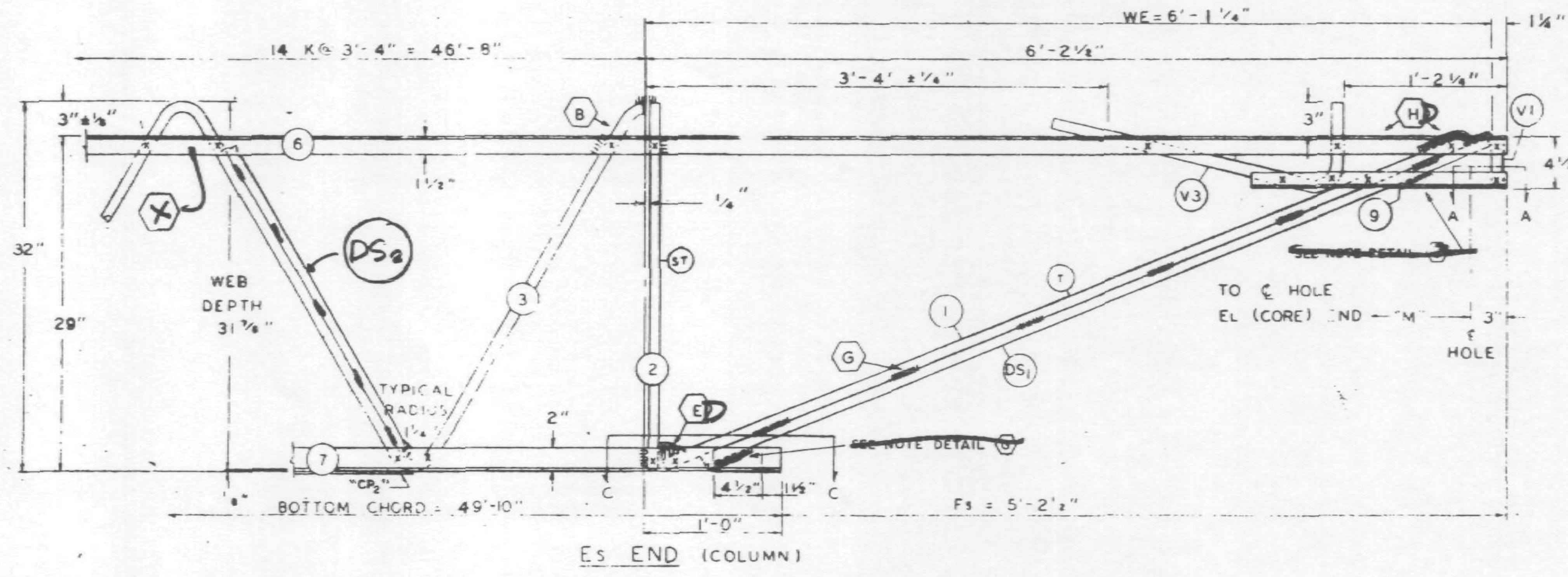

Es END (COLUMN)

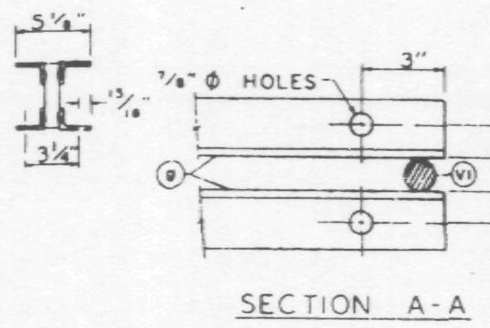

SECTION A-A

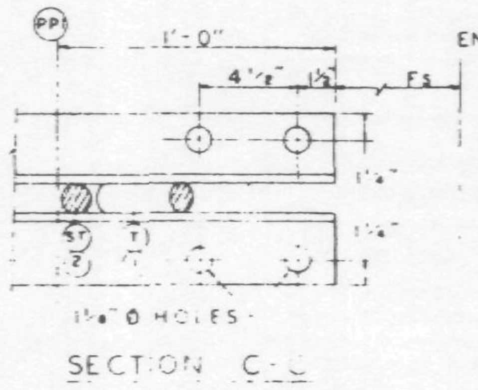

SECTION C-C

ALL PANEL POINTS RESISTANCE WELDED (K).
ARC WELDS INDICATED AT SHADED AREAS
AND AT BOTTOM CHORD WEB SPLICES (▬).
ALL WELD DETAILS SHOWN ON SHEETS ST290, ST291, AND ST280.
SEE SHEET ST295 FOR V1, V2, & V3 DETAILS.
CHORD PLATE DETAILS SHOWN ON SHEET ST280.
LETTERS IN HEXAGON INDICATE WELD DETAIL, ie., ⟨A⟩.
LETTERS AND NUMBERS IN SQUARES INDICATE RESISTANCE WELD STRENGTH IDENTIFIED IN THE QUALITY CONTROL PROGRAM, ie., [R6].

DAMPING UNIT CONNECTION PLATE ATTACHED TO BOTTOM CHORD (COL END) IN FIELD ASSEMBLY BY CONTRACT WTC 223.00.

6/17/68 WAB

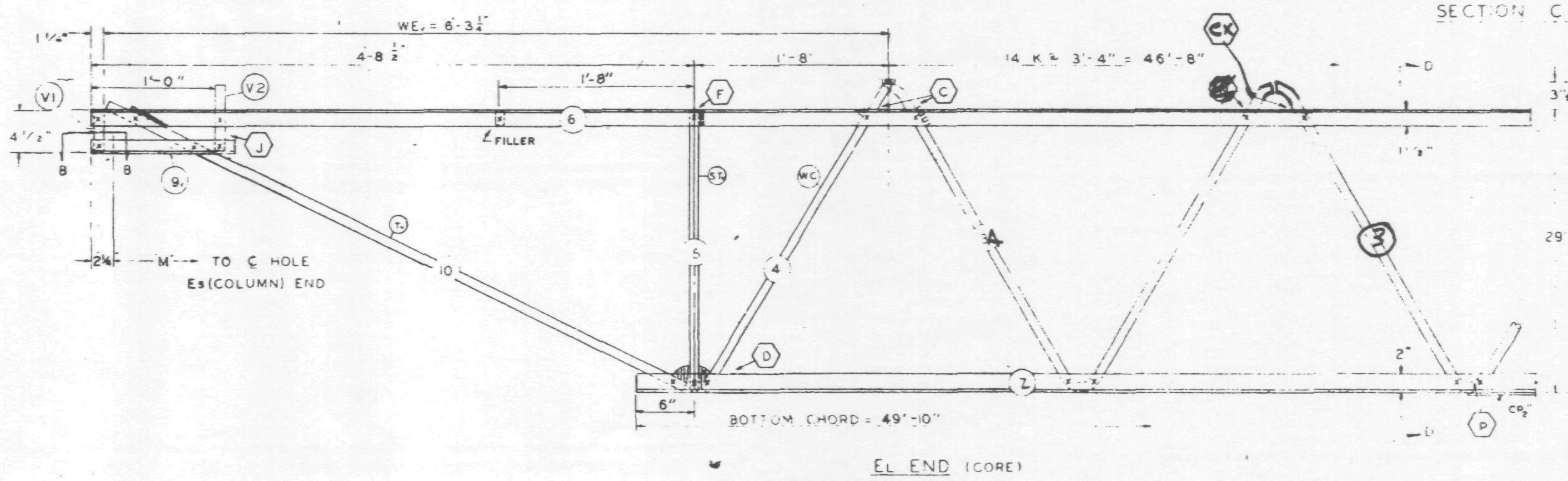

EL END (CORE)

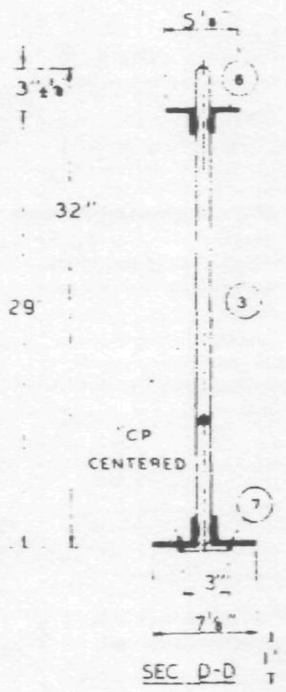

SEC D-D

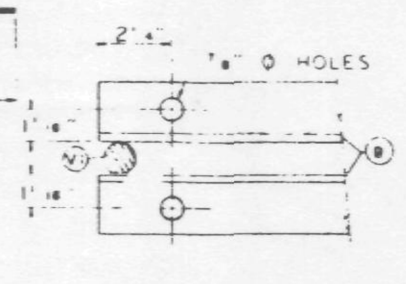

SECTION B-B

REF DRWGS

7-AB1-5	2-15-68
7-AB1-52	2-15-68
7-AB1-53	1-3-68
7-AB4-50 & 50 2	10-20 6'
7-AB3-2	
7-AB4-50 5	10-20-8

4-15-68

PAINT
LACLEDE ELECTROCOAT
RED NO. 1000

TRUSS DESIGNATION	TOP CHORD TWO ANGLES				BOTTOM CHORD TWO ANGLES				MAIN WEB "W"					FILLER		"M" C-C HOLE	TRUSS DATA		CHORD PLATE			
	MK	TYPE STEEL	CHORD SIZE	LENGTH	MK	TYPE STEEL	CHORD SIZE	LENGTH	MK	TYPE STEEL	DIA	LENGTH	NO. OF K	NO	DIA				MK	TYPE STEEL	SIZE	LENGTH
C32T8E-593	6	A242	2"x1½"x 3.1	59'-3"	7	A36	3"x2"x 33	49'-10"	3	A36	1.09	87'-2½"	14 @ 3'-4" = 46'-8"	11	1.09	58'-9¾"			CP2	A36	¼x3"	40'-0"

COLUMN END

Es END TRUSS DESIGNATION	BEARING ANGLES				WE	DIAGONAL "T" STRUT				VERTICAL "ST" STRUT				END STIFFENER MK. V1			END STIFFENER MK. V3			DOUBLE STRUT			
	MK	TYPE STEEL	CHORD SIZE	LENGTH		MK	TYPE STEEL	DIA	LENGTH	MK	TYPE STEEL	DIA	LENGTH	TYPE STEEL	DIA	LENGTH	TYPE STEEL	DIA	LENGTH	MK	TYPE STEEL	DIA	LENGTH
C32T8E-593	9	A242	2"x1½"x 25	1'-10"	6'-1¼"		A36	1.09	6'-3⅛"	2	A36	1.09	2'-7⅜"	A36	1.09	4⅜"	A36	1.09	2'-9½"	DS1	A242	.75	6'-3⅛"
																				DS2	A242	.75	

CHECK DIMENSION FOR TRUSS FAB LOCATION OF TRANS. TRUSS				
CL-1	CL-2	CL-3	CL-4	Fs
9'-6½"	22'-10½"	36'-2½"	49'-6½"	5'-2½"

CORE END

EL END TRUSS DESIGNATION	BEARING ANGLES				WE1	DIAGONAL "T1" STRUT				VERTICAL "ST" STRUT				END STIFFENER MK. V1			END STIFFENER			END STIFFENER MK. V4			WEB "WC"					WEB "WT"					Web		
	MK	TYPE STEEL	CHORD SIZE	LENGTH		MK	TYPE STEEL	DIA	LENGTH	MK	TYPE STEEL	DIA	LENGTH	TYPE STEEL	DIA	LENGTH	TYPE STEEL	DIA	LENGTH	TYPE STEEL	DIA	LENGTH	MK	TYPE STEEL	PCS	DIA	LENGTH	MK	TYPE STEEL	PCS	DIA	LENGTH	MK	TYPE STEEL	DIA
C32T8E-593	8	A242	2"x1½"x 25	1'-2"	6'-3	10	A242	1.14	5'-1	5	A242	1.14	2'-4¾"	A242	1.14	4⅞	A242	1.14	7⅞	—	—	—	4	A242	1	1.14	3'-0½"	-	—	—	—	—	3A	A242	1.14

STEEL TRUSS DETAILS
FOR
WORLD TRADE CENTER - N.Y.C.
FOR
THE PORT OF NEW YORK AUTHORITY

FLOOR TRUSS C32T8E 59'-3" OVERALL
WORLD TRADE CENTER TOWER A-B

FABRICATION BY LACLEDE STEEL COMPANY

FABRICATED AT MADISON, ILLINOIS		DESIGN DRAWING NO. 7-AB1-5 7-AB3-2 PLATE	
APPROVED FOR FABRICATION BY ___ FOR PONYA	DATE	DRAWN BY [illegible] DATE FEB. 24, 1968	
APPROVED FOR FABRICATION BY ___ FOR FABRICATOR LACLEDE STEEL CO.	DATE	CHECKED BY J.R. PAUL DATE FEB. 24, 1968	IN CHARGE OF PROD. DEV.
DETAILED BY A.C. WEBER		FABRICATION CONT. NO. W.T.C. 221	SHEET NO. ST208E

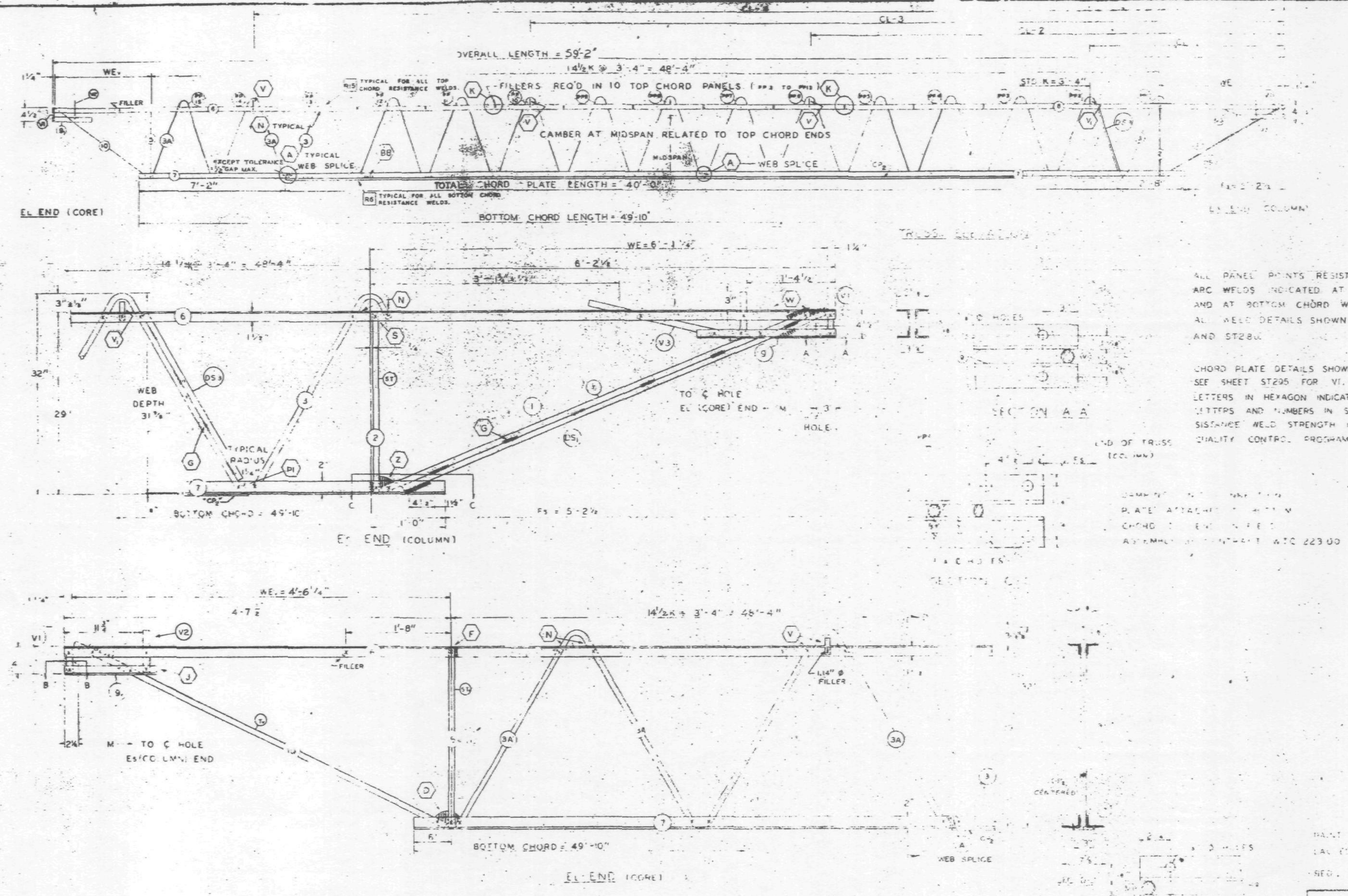

ALL PANEL POINTS RESISTANCE WELDED
ARC WELDS INDICATED AT SHADED AREAS
AND AT BOTTOM CHORD WEB SPLICES
ALL WELD DETAILS SHOWN ON SHEETS ST290, ST291, ST292,
AND ST28_

CHORD PLATE DETAILS SHOWN ON SHEET ST280.
SEE SHEET ST295 FOR V1, V2, & V3 DETAILS.
LETTERS IN HEXAGON INDICATE WELD DETAIL, e.g. (A).
LETTERS AND NUMBERS IN SQUARES INDICATE RESISTANCE WELD STRENGTH IDENTIFIED IN THE QUALITY CONTROL PROGRAM, e.g. R6

FABRICATION REQUIREMENTS	DESIGN	TOLERANCE
CAMBER AT MIDSPAN	2"	± 3/8"
DESIGN DEPTH	30"	± 1/4"
PANEL PT.	3'-4"	± 1/4"
OVERALL LENGTH	59'-2"	± 3/8"
WEB DEPTH	31 7/8"	± 1/4"

REF DRWGS

7-AB1-5	10-25-68
7-AB-52	2-15-68
7-AB1-53	7-22-68
7-AB4-3	8-1-68
7-AB3-2	1-30-68
7-AB4-50 5	10-20-67

PAINT
LACLEDE ELECTROCOAT
REQ. NO. 1000

TRUSS DESIGNATION	TOP CHORD TWO ANGLES MK	TYPE STEEL	CHORD SIZE	LENGTH	BOTTOM CHORD TWO ANGLE MK	TYPE STEEL	CHORD SIZE	LENGTH	MAIN WEB "W" MK	TYPE STEEL	DIA	LENGTH	NO OF K	FILLER NO	DIA	"M" ℄ HOLE	CONNECTION FILLERS NO	DIA	LENGTH	CHORD PLATE MK	TYPE STEEL	SIZE	LENGTH	DOUBLE STRUT MK	TYPE STEEL	DIA	LENGTH
C32T8F 592	6	A242	2"x1½"x .31	59'-2"	7	A36	3"x2"x .3_	49'-10"	3 / 3A	A36 / A242	1.09 / 1.14	78'-3¾ / 12'-5½"	12½ @ 3'-4" = 41'-8" / 2 @ 3'-4" = 6'-8"	11	1.09	58'-8¾"	2 / 1	1.09 / 1.14	3" / 3"	CP2	A36	_x3	40'-0"	DS3	A242	.75	2'-6¾"

COLUMN END

E3 END TRUSS DESIGNATION	BEARING ANGLES MK	TYPE STEEL	CHORD SIZE	LENGTH	WE	DIAGONAL "T" STRUT MK	TYPE STEEL	DIA	LENGTH	VERTICAL "ST" STRUT MK	TYPE STEEL	DIA	LENGTH	END STIFFENER MK V1 TYPE STEEL	DIA	LENGTH	MK V3 TYPE STEEL	DIA	LENGTH	DOUBLE STRUT MK	TYPE STEEL	DIA	LENGTH
C32T8F -592	9	A242	2"x1½"x .25	2'-3"	6'-1¼"	1	A36	1.09	6'-3¼"	2	A36	1.09	2'-4⅝"	A36	1.09	4⅝"	A36	1.09	2'-9½"	DS5	A242	.92	6'-3⅛"

CHECK DIMENSION FOR TRUSS FAB. LOCATION OF TRANS TRUSS CL-1	CL-2	CL-3	CL-4	Fs
9'-6½"	22'-10½"	36'-2½"	49'-6½"	5'-2½"

CORE END

EL END TRUSS DESIGNATION	BEARING ANGLES MK	TYPE STEEL	CHORD SIZE	LENGTH	WE	DIAGONAL "T" STRUT MK	TYPE STEEL	DIA	LENGTH	VERTICAL "ST" STRUT MK	TYPE STEEL	DIA	LENGTH	END STIFFENER MK V1 TYPE STEEL	DIA	LENGTH	MK V2 TYPE STEEL	DIA	LENGTH	MK V4 TYPE STEEL	DIA	LENGTH	WEB "WC" MK	TYPE STEEL	PCS	DIA	LENGTH	WEB "WT" MK	TYPE STEEL	PCS	DIA	LENGTH
C32T8F -592	9	A242	2"x1½"x .25	1'-1¾"	4'-6¼	10	A242	1.14	5'-0½"	5	A242	1.14	2'-4⅛"	A242	1.14	4⅞"	A242	1.14	7⅞"	—	—	—	—	—	—	—	—	—	—	—	—	—

STEEL TRUSS DETAILS
FOR
WORLD TRADE CENTER – N.Y.C.
FOR
THE PORT OF NEW YORK AUTHORITY

FLOOR TRUSS C32T8F 59'-2" OVERALL
WORLD TRADE CENTER TOWER A-B

FABRICATION BY LACLEDE STEEL COMPANY
FABRICATED AT MADISON, ILLINOIS
DESIGN DRAWING NO. 7-AB1-5, 7-AB3-2. PLATE
APPROVED FOR FAB. — James White — DATE 3/24/69
DRAWN BY — DATE MAR 6, 1969
CHECKED BY TM CHURA DATE MAR 6, 1969
IN CHARGE OF PROD. DEV.
FABRICATION CONT NO W.T.C. 221
SHEET NO. ST20_

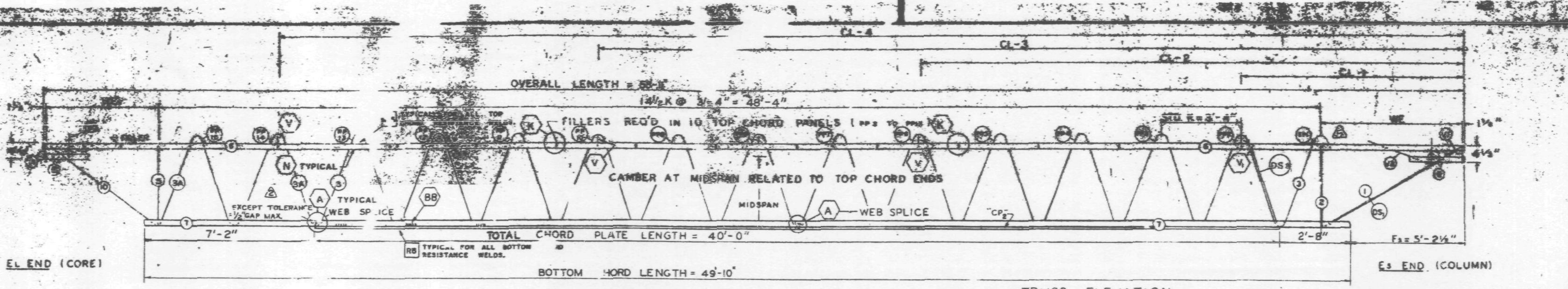

TRUSS ELEVATION

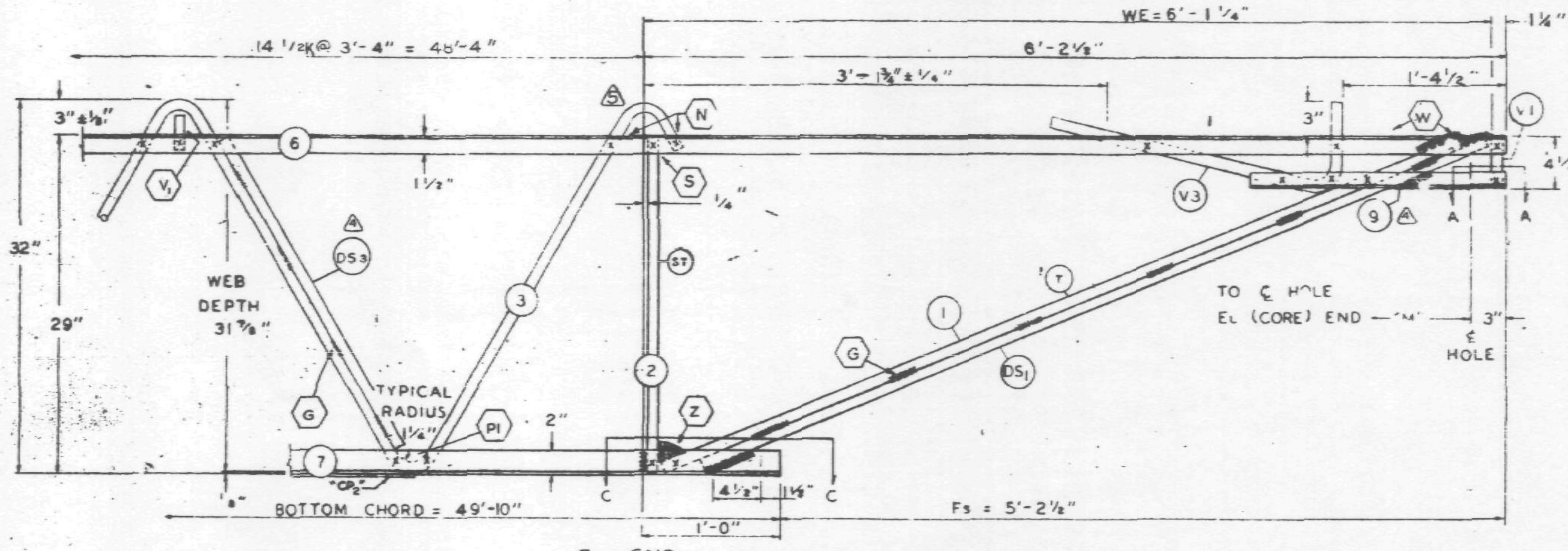

Es END (COLUMN)

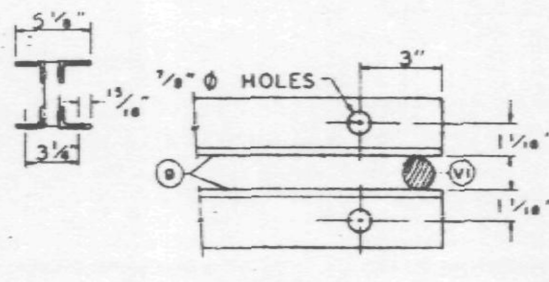

SECTION A-A

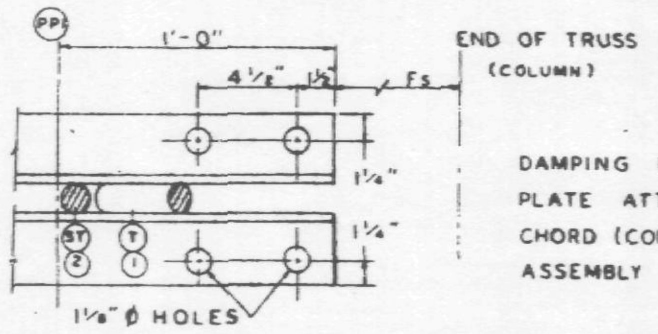

SECTION C-C

ALL PANEL POINTS RESISTANCE WELDED (x).
ARC WELDS INDICATED AT SHADED AREAS
AND AT BOTTOM CHORD WEB SPLICES (▬).
ALL WELD DETAILS SHOWN ON SHEETS ST290, ST291, ST292, AND ST280.

CHORD PLATE DETAILS SHOWN ON SHEET ST280.
SEE SHEET ST295 FOR V1, V2, & V3 DETAILS.
LETTERS IN HEXAGON INDICATE WELD DETAIL, ie., (A).
LETTERS AND NUMBERS IN SQUARES INDICATE RESISTANCE WELD STRENGTH IDENTIFIED IN THE QUALITY CONTROL PROGRAM, ie., [RB].

DAMPING UNIT CONNECTION PLATE ATTACHED TO BOTTOM CHORD (COL END) IN FIELD. ASSEMBLY BY CONTRACT WTC 223.00.

FABRICATION REQUIREMENTS		
	[illegible]	[illegible]
CAMBER AT MIDSPAN	2"	[illegible]
DESIGN DEPTH	[illegible]	[illegible]
PANEL "K"	[illegible]	[illegible] 1/4"
OVERALL LENGTH	58'-11"	[illegible] 3/8"
WEB DEPTH	1/8"	[illegible] 1/4"

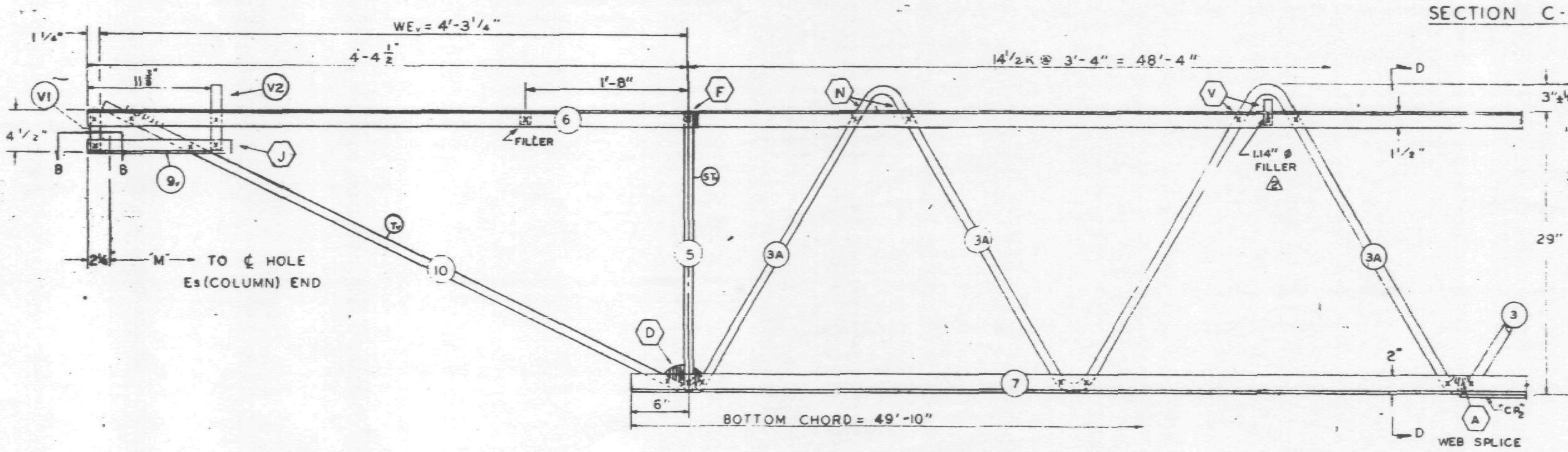

EL END (CORE)

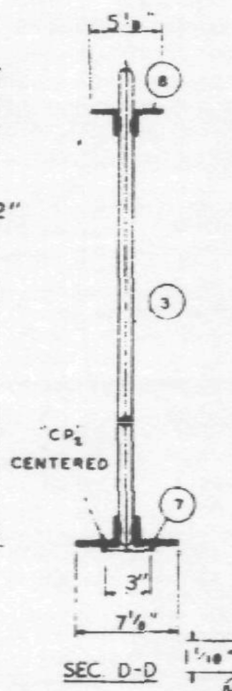

SEC D-D

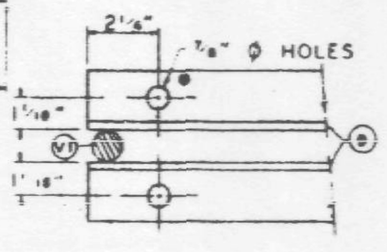

SECTION B-B

NO.	DATE	REVISION	BY
5	12-12-68	AS NOTED	D.C.C.
4	7-22-68	MK. (9) LENGTH & DS_3 LENGTH	T.M.C.
3	7-8-68	TOLERANCE, WEB SPLICE	T.M.C.
2	6-27-68	AS NOTED	T.M.C.
1	6-22-68	GENERAL	T.M.C.

5 REF. DRWGS

7-AB1-5	10-15-68
7-AB1-52	2-15-68
7-AB1-53	7-22-68
7-AB4-50	8-1-68
7-AB3-2	1-3-68
7-AB4-50.5	10-20-67

PAINT
LACLEDE ELECTROCOAT
RED NO. 10001

TRUSS DESIGNATION	TOP CHORD TWO ANGLES				BOTTOM CHORD TWO ANGLES				MAIN WEB "W"					FILLER		"M" C/C HOLE	CONNECTION FILLERS			CHORD PLATE				DOUBLE STRUT			
	MK	TYPE STEEL	CHORD SIZE	LENGTH	MK	TYPE STEEL	CHORD SIZE	LENGTH	MK	TYPE STEEL	DIA.	LENGTH (5)	NO. OF K	NO	DIA		NO	DIA	LENGTH	MK	TYPE STEEL	SIZE	LENGTH	MK	TYPE STEEL	DIA	LENGTH (4)
C32T8G-5811	6	A242	2"x1 1/2"x 31	58'-11"	7	A36	3"x 2"x 33	49'-10"	3 3A	A36 A242	1.09 1.14	78'-3 3/4" 12'-5 1/2"	12 1/2 @ 3'-4" = 41'-8" 2 @ 3'-4" = 6'-8"	11	1.09	58'-5 3/4"	3 1	1.09 1.14	3" 3"	CP_2	A36	1/4x3	40'-0"	DS_3	A242	.75	2'-6 3/4"

(2)

COLUMN END

Es END	TRUSS DESIGNATION	BEARING ANGLES				WE	DIAGONAL "T" STRUT				VERTICAL "ST" STRUT				END STIFFENER MK. V1			END STIFFENER MK. V3			DOUBLE STRUT			
		MK	TYPE STEEL	CHORD SIZE	LENGTH (4)		MK	TYPE STEEL	DIA	LENGTH	MK	TYPE STEEL	DIA	LENGTH (5)	TYPE STEEL	DIA	LENGTH	TYPE STEEL	DIA	LENGTH	MK	TYPE STEEL	DIA	LENGTH
	C32T8G-5811	9	A242	2"x1 1/2"x .25	2'-3"	6'-1 1/4"	1	A36	1.09	6'-3 1/8"	2	A36	1.09	2'-4 7/8"	A36	1.09	4 3/8"	A36	1.09	2'-9 1/8"	DS_1	A242	.92	6'-3 1/8"

CHECK DIMENSION FOR TRUSS FAB. LOCATION OF TRANS. TRUSS

CL-1	CL-2	CL-3	CL-4	Fs
9'-6 1/8"	22'-10 1/2"	36'-2 1/2"	49'-6 1/2"	5'-2 1/2"

CORE END

EL END	TRUSS DESIGNATION	BEARING ANGLES				WE1	DIAGONAL "T1" STRUT				VERTICAL "ST1" STRUT				END STIFFENER MK. V1			END STIFFENER MK. [illegible]			END STIFFENER MK. V4			WEB "WC"					WEB "WT"				
		MK	TYPE STEEL	CHORD SIZE	LENGTH		MK	TYPE STEEL	DIA	LENGTH	MK	TYPE STEEL	DIA.	LENGTH (5)	TYPE STEEL	DIA.	LENGTH	TYPE STEEL	DIA.	LENGTH	TYPE STEEL	DIA.	LENGTH	MK	TYPE STEEL	PCS	DIA	LENGTH	MK	TYPE STEEL	PCS	DIA.	LENGTH
	C32T8G-5811	9	A242	2"x1 1/2"x .25	1'-1 1/4"	4'-3 1/4"	10	A242	1.14	4'-9 1/2"	5	A242	1.14	2'-4 7/8"	A242	1.14	4 1/2"	A242	1.14	7 1/2"	—	—	—	—	—	—	—	—	—	—	—	—	—

STEEL TRUSS DETAILS
FOR
WORLD TRADE CENTER - N.Y.C.
FOR
THE PORT OF NEW YORK AUTHORITY

FLOOR TRUSS C32T8G 58'-11" OVERALL
WORLD TRADE CENTER TOWER A-B

FABRICATION BY LACLEDE STEEL COMPANY

FABRICATED AT MADISON, ILLINOIS		DESIGN DRAWING NO. 7-AB1-5 7-AB3-2	PLATE
APPROVED FOR FABRICATION James White FOR P.O.N.Y.A.	DATE 12/19/68	DRAWN BY luh DATE FEB. 24, 1968	
APPROVED FOR FABRICATION BY FOR FABRICATOR	DATE	CHECKED BY J.R. PAUL DATE FEB. 24, 1968	IN CHARGE OF PROD. DEV.
DETAILED BY A.C. WEBER LACLEDE STEEL CO.		FABRICATION CONT. NO. WTC 221	SHEET NO. ST[illegible]

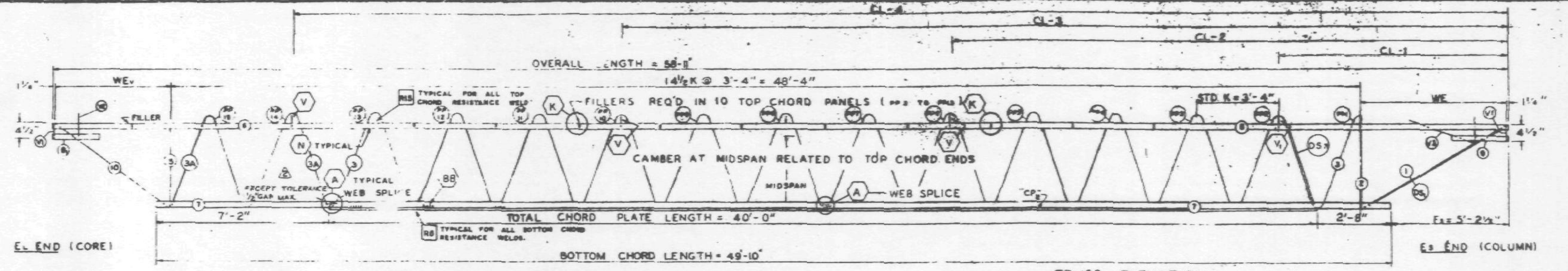

TRUSS ELEVATION

FABRICATION REQUIRMENTS	DESIGN	TOLERANCE
CAMBER AT MIDSPAN	2"	± 3/8"
DESIGN DEPTH	29"	± 1/4"
PANEL "K"	3'-4"	± 1/4"
OVERALL LENGTH	58'-11"	± 3/8"
WEB DEPTH	31 7/8"	± 1/4"

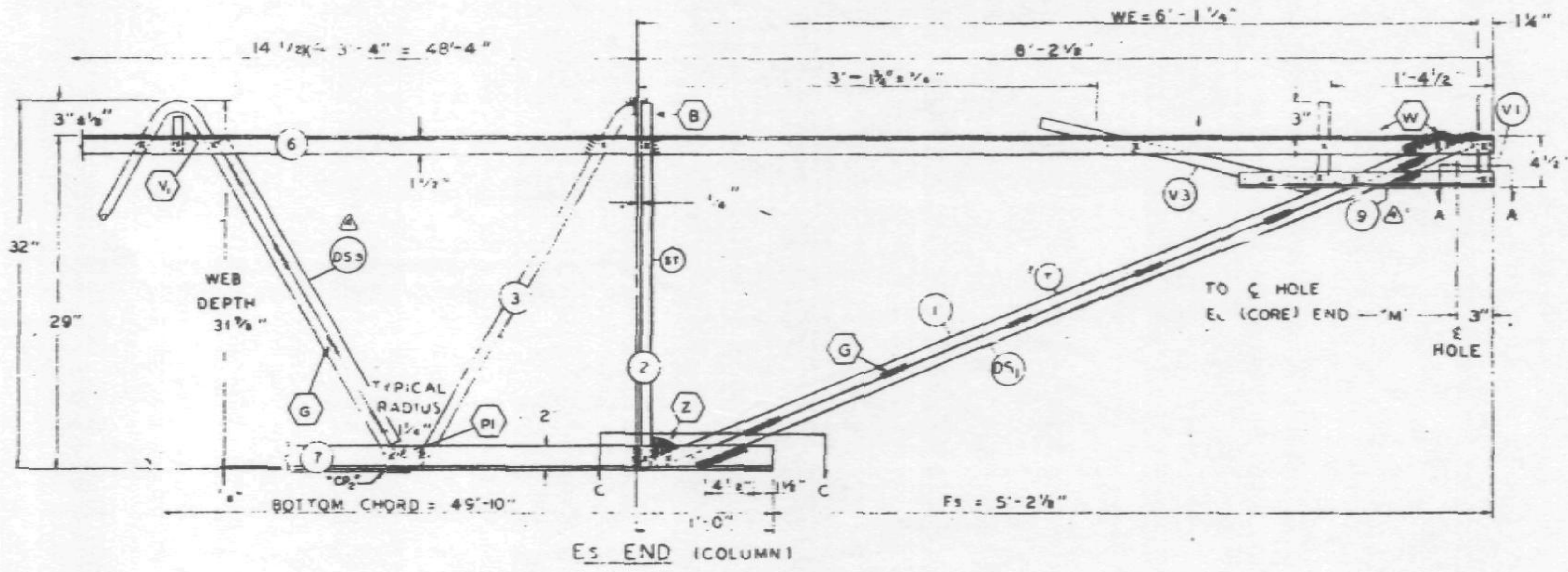

Es END (COLUMN)

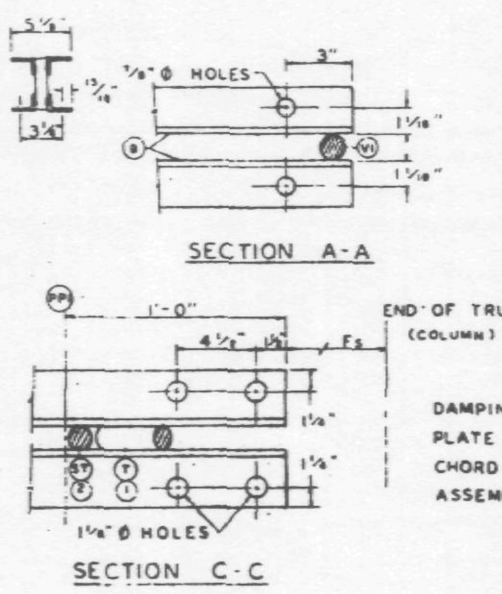

ALL PANEL POINTS RESISTANCE WELDED
ARC WELDS INDICATED AT SHADED AREAS
AND AT BOTTOM CHORD WEB SPLICES
ALL WELD DETAILS SHOWN ON SHEETS ST290, ST291, ST292, AND ST280.

CHORD PLATE DETAILS SHOWN ON SHEET ST280.
SEE SHEET ST295 FOR V1, V2, & V3 DETAILS.
LETTERS IN HEXAGON INDICATE WELD DETAIL, ie., (A).
LETTERS AND NUMBERS IN SQUARES INDICATE RESISTANCE WELD STRENGTH IDENTIFIED IN THE QUALITY CONTROL PROGRAM, ie., R6.

DAMPING UNIT CONNECTION PLATE ATTACHED TO BOTTOM CHORD (COL END) IN FIELD ASSEMBLY BY CONTRACT WTC 223.00.

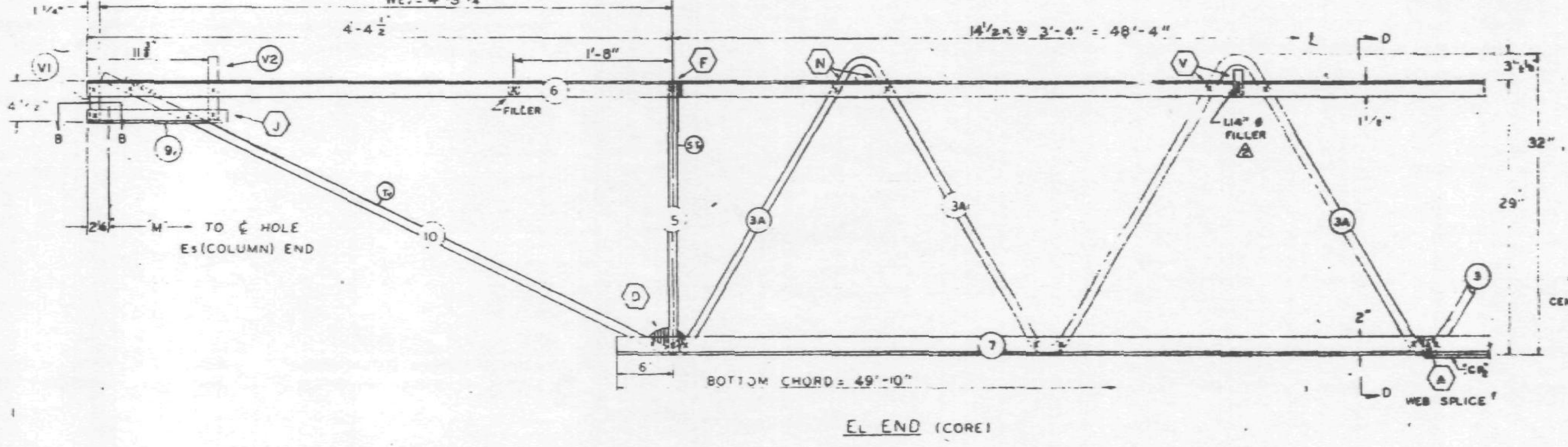

EL END (CORE)

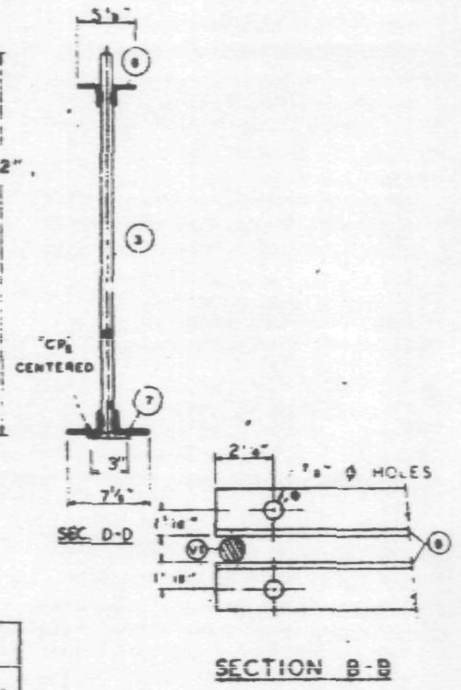

SECTION B-B

NO.	DATE	REVISION	BY
4	7-22-68	MK. 9 LENGTH & DS3 LENGTH	T.M.C.
3	7-8-68	TOLERANCE, WEB SPLICE	T.M.C.
2	6-27-68	AS NOTED	T.M.C.
1	6-22-68	GENERAL	T.M.C.

REF DRWGS
7-AB1-5 4-15-68
7-AB1-52 2-15-68
7-AB1-53 1-3-68
7-AB4-50 & 50 2 10-20-67
7-AB3-2 1-3-68
7-AB4-503 10-20-67

PAINT
LACLEDE ELECTROCOAT
RED NO. 10001

TRUSS DESIGNATION	TOP CHORD TWO ANGLES				BOTTOM CHORD TWO ANGLES				MAIN WEB "W"					FILLER		"M" ℄ HOLE	CONNECTION FILLERS			CHORD PLATE				DOUBLE STRUT			
	MK	TYPE STEEL	CHORD SIZE	LENGTH	MK	TYPE STEEL	CHORD SIZE	LENGTH	MK	TYPE STEEL	DIA	LENGTH	NO. OF K	NO	DIA		NO	DIA	LENGTH	MK	TYPE STEEL	SIZE	LENGTH	MK	TYPE STEEL	DIA	LENGTH
C32T8G-5811	6	A242	2"x1½"x 3	58'-11"	7	A36	3"x2"x 33	49'-10"	3 3A	A36 A242	1.09 1.14	77'-10⅝" 12'-5½"	12½ @ 3'-4" = 41'-8" 2 @ 3'-4" = 6'-8"	11	1.09	58'-5¾"	3 1	1.09 1.14	3" 3"	CP2	A36	¼x3	40'-0"	DS3	A242	.75	2'-6¼"

COLUMN END	Es END	TRUSS DESIGNATION	BEARING ANGLES				WE	DIAGONAL "T" STRUT				VERTICAL "ST" STRUT				END STIFFENER MK. V1			END STIFFENER MK. V3			DOUBLE STRUT			
			MK	TYPE STEEL	CHORD SIZE	LENGTH		MK	TYPE STEEL	DIA	LENGTH	MK	TYPE STEEL	DIA	LENGTH	TYPE STEEL	DIA	LENGTH	TYPE STEEL	DIA	LENGTH	MK	TYPE STEEL	DIA	LENGTH
		C32T8G-5811	9	A242	2"x1½"x 25	2'-3"	6'-1¼"	1	A36	1.09	6'-3¼"	2	A36	1.09	2'-7⅞"	A36	1.09	4⅝"	A36	1.09	2'-9½"	DS1	A242	.92	6'-3⅛"

CHECK DIMENSION FOR TRUSS FAB. LOCATION OF TRANS. TRUSS				
CL-1	CL-2	CL-3	CL-4	Fs
9'-6½"	22'-10½"	36'-2½"	49'-6½"	5'-2⅛"

CORE END	EL END	TRUSS DESIGNATION	BEARING ANGLES				WE1	DIAGONAL "T1" STRUT				VERTICAL "ST1" STRUT				END STIFFENER MK. V1			END STIFFENER MK. V2			END STIFFENER MK. V4			WEB "Wc"					WEB "W1"				
			MK	TYPE STEEL	CHORD SIZE	LENGTH		MK	TYPE STEEL	DIA	LENGTH	MK	TYPE STEEL	DIA	LENGTH	TYPE STEEL	DIA	LENGTH	TYPE STEEL	DIA	LENGTH	TYPE STEEL	DIA	LENGTH	MK	TYPE STEEL	PCS	DIA	LENGTH	MK	TYPE STEEL	PCS	DIA	LENGTH
		C32T8G-5811	9	A242	2"x1½"x 25	1'-1¼"	4'-3¼"	10	A242	1.14	4'-9½"	5	A242	1.14	2'-4⅜"	A242	1.14	4½"	A242	1.14	7½"	—	—	—	—	—	—	—	—	—	—	—	—	—

STEEL TRUSS DETAILS
FOR
WORLD TRADE CENTER - N.Y.C.
FOR
THE PORT OF NEW YORK AUTHORITY

FLOOR TRUSS C32T8G 58'-11" OVERALL
WORLD TRADE CENTER · TOWER A-B

FABRICATION BY LACLEDE STEEL COMPANY

FABRICATED AT MADISON, ILLINOIS		DESIGN DRAWING NO. 7-AB1-5 7-AB3-2	PLATE
APPROVED FOR FABRICATION BY WAB FOR P.O.N.Y.A.	DATE 8/2/68	DRAWN BY [signature] DATE FEB. 24, 1968	
APPROVED FOR FABRICATION BY FOR FABRICATOR	DATE	CHECKED BY J. PAUL DATE FEB. 24, 1968	IN CHARGE OF PROD. DEV.
DETAILED BY T.E. WEBER		FABRICATION CONT. NO. 221	SHEET NO. ST208G

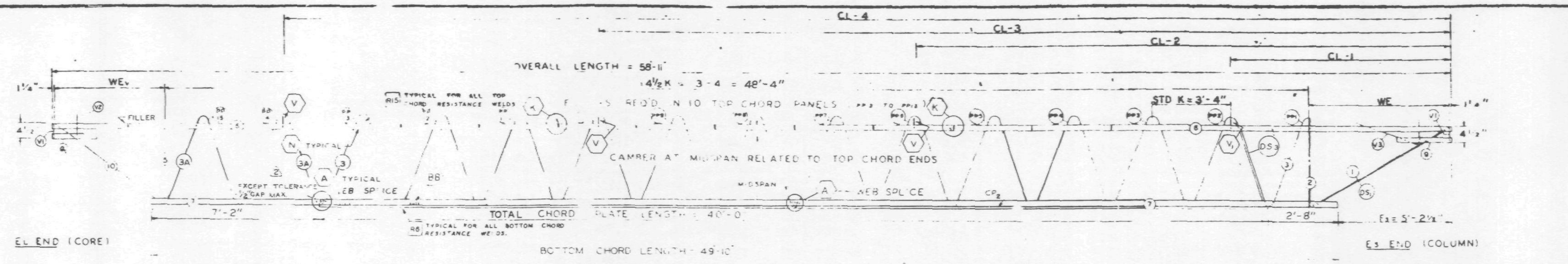

TRUSS ELEVATION

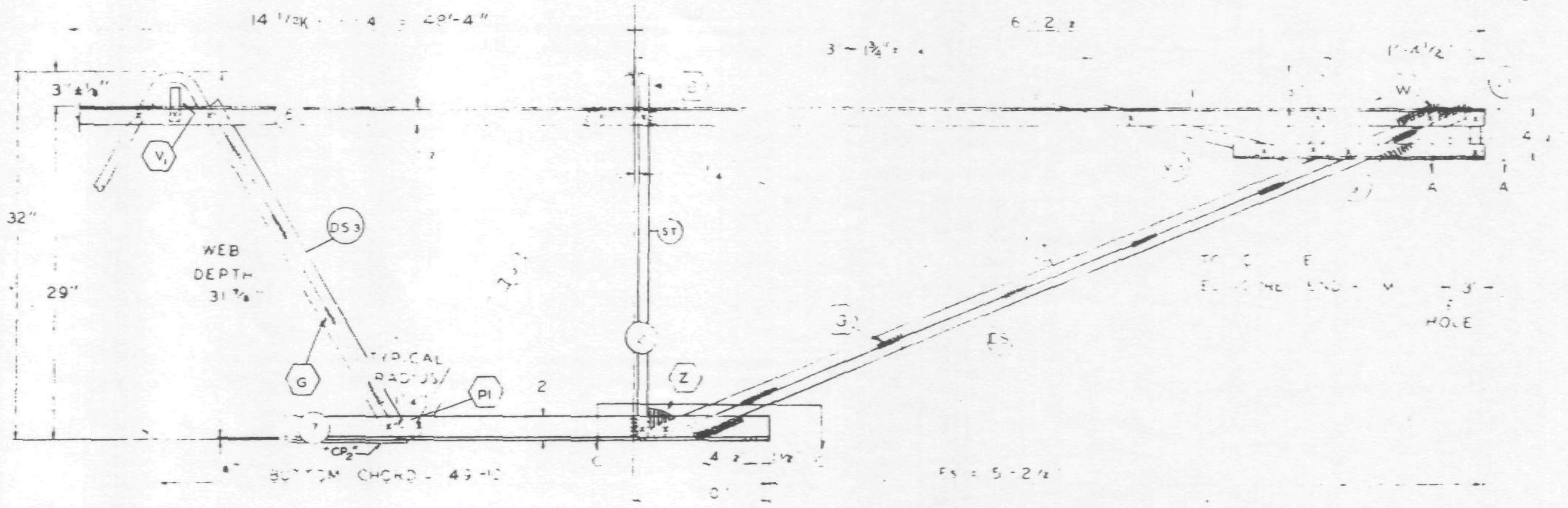

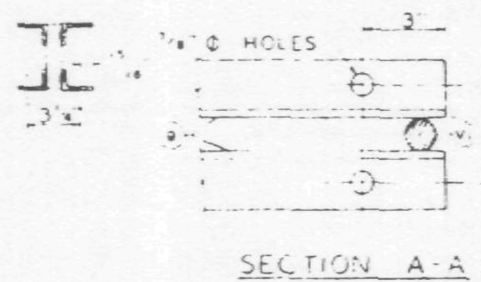

SECTION A-A

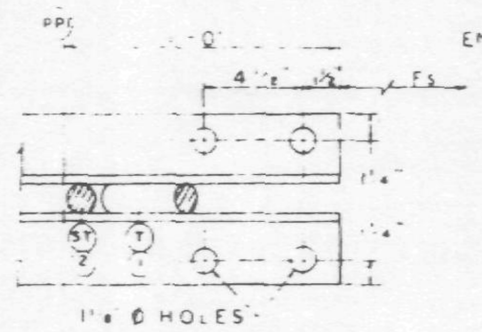

SECTION C-C

ALL PANEL POINTS RESISTANCE WELDED (X). ARC WELDS INDICATED AT SHADED AREAS AND AT BOTTOM CHORD WEB SPLICES ( ). ALL WELD DETAILS SHOWN ON SHEETS ST290, ST291, ST292, AND ST28?.

CHORD PLATE DETAILS SHOWN ON SHEET ST280. SEE SHEET ST295 FOR V1, V2, & V3 DETAILS. LETTERS IN HEXAGON INDICATE WELD DETAIL, ie., (A). LETTERS AND NUMBERS IN SQUARES INDICATE RESISTANCE WELD STRENGTH IDENTIFIED IN THE QUALITY CONTROL PROGRAM, ie., [R6].

DAMPING UNIT CONNECTION PLATE ATTACHED TO BOTTOM CHORD (CCL END) IN FIELD ASSEMBLY BY CONTRACT WTC 223.00.

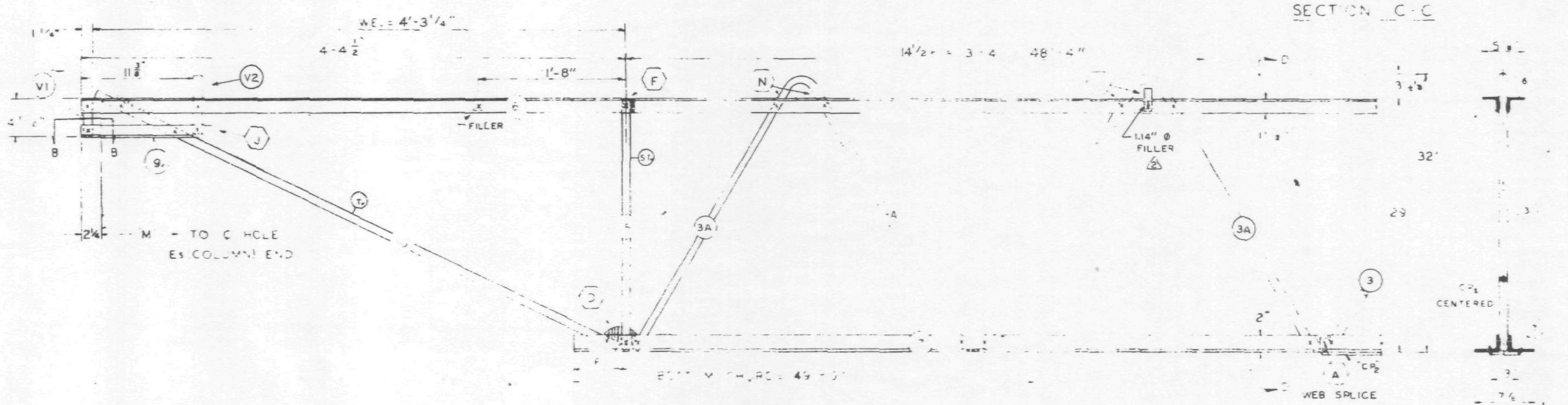

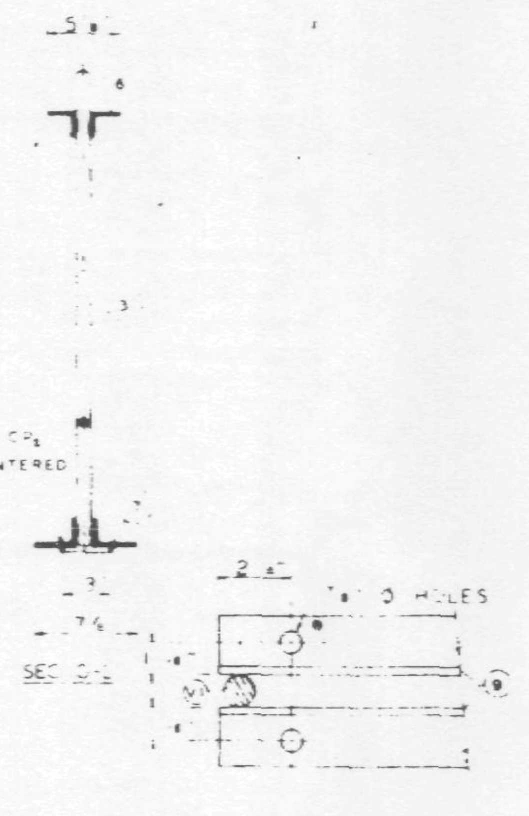

SECTION B-B

FABRICATION REQUIREMENTS	DESIGN	TOLERANCE
CAMBER AT MIDSPAN	2"	± 3/8"
DESIGN DEPTH	[illegible]"	± 1/4"
PANEL "K"	[illegible]-4"	± [illegible] 4"
OVERALL LENGTH	58'-11"	± [illegible] 8"
WEB DEPTH	31 7/8	± [illegible]/4

NO.	DATE	REVISION	BY
3	7-8-68	TOLERANCE, WEB SPLICE	T.M.C.
2	6-27-68	AS NOTED	T.M.C.
1	6-22-68	GENERAL	T.M.C

REF DRWGS

7-AB1-5	4-15-68
7-AB1-52	2-15-68
7-AB1-53	1-3-68
7-AB4-[illegible] & 50 2	10-20-67
7-AB3-2	1-3-68
7-AB4-50 5	10-20-67

PAINT
LACLEDE ELECTROCOAT
RED NO 1000

TRUSS DESIGNATION	TOP CHORD TWO ANGLES				BOTTOM CHORD TWO ANGLES				MAIN WEB					FILLER			CONNECTION FILLERS			CHORD PLATE				DOUBLE STRUT			
	MK	TYPE STEEL	CHORD SIZE	LENGTH	MK	TYPE STEEL	CHORD SIZE	LENGTH	MK	TYPE STEEL	DIA	LENGTH	NO OF K	NO	DIA		NO	DIA	LENGTH	MK	TYPE STEEL	SIZE	LENGTH	MK	TYPE STEEL	DIA	LENGTH
C32T8G-5811	6	A242	2"x [illegible]	58 [illegible]	[illegible]	A36	3"x2"x 3[illegible]	49'-10"	3 / 3A	A36 / A242	1.09 / 1.14	77'-10 3/8" / 12'-5 1/2"	12 1/2 @ 3'-4" = 41'-8" / 2 @ 3'-4 = 6'-8"	1	1.09	58 5 3/4"	3 / 1	1.09 / 1.14	3" / 3"	CP2	A36	4x3	40'-0"	DS3	A242	.75	2'-8 1/2"

COLUMN END

Es END	TRUSS DESIGNATION	BEARING ANGLES				WE	DIAGONAL "T" STRUT				VERTICAL "ST" STRUT				END STIFFENER MK V1			END STIFFENER MK V3			DOUBLE STRUT			
		MK	TYPE STEEL	CHORD SIZE	LENGTH		MK	TYPE STEEL	DIA	LENGTH	MK	TYPE STEEL	DIA	LENGTH	TYPE STEEL	DIA	LENGTH	TYPE STEEL	DIA	LENGTH	MK	TYPE STEEL	DIA	LENGTH
	C32T8G-5811	9	A242	2"x1 1/2"x 25	2'-0"	6'-[illegible]"	[illegible]	A36	1.09	6'-3 1/8"	2	A36	1.09	2'-7 7/8"	A36	1.09	4 3/8"	A36	1.[illegible]	2'-9 [illegible]"	DS1	A242	.92	6'-3 1/8"

CHECK DIMENSION FOR TRUSS FAB.
LOCATION OF TRANS. TRUSS

CL-1	CL-2	CL-3	CL-4	Fs
9'-6 1/2"	22'-10 1/2"	36'-2 1/2"	49'-6 1/2"	5'-2 1/2"

CORE END

EL END	TRUSS DESIGNATION	BEARING ANGLES				WE	DIAGONAL "T" STRUT				VERTICAL "ST" STRUT				END STIFFENER MK V1			END STIFFENER MK V2			END STIFFENER MK V4			WEB "Wc"					WEB "WT"				
		MK	TYPE STEEL	CHORD SIZE	LENGTH		MK	TYPE STEEL	DIA	LENGTH	MK	TYPE STEEL	DIA	LENGTH	TYPE STEEL	DIA	LENGTH	TYPE STEEL	DIA	LENGTH	TYPE STEEL	DIA	LENGTH	MK	TYPE STEEL	PCS	DIA	LENGTH	MK	TYPE STEEL	PCS	DIA	LENGTH
	C32T8G-5811	9	A242	2"x1"x 25	1'-1 1/4"	4'-3 1/4"	0	A242	1.14	4'-9 1/2"	5	A242	1.4	2'-4 3/4"	A242	1.4	4 1/2	A242	1.4	7 3/4"	—	—	—	—	—	—	—	—	-	—	—	—	—

STEEL TRUSS DETAILS
FOR
WORLD TRADE CENTER N.Y.C.
FOR
THE PORT OF NEW YORK AUTHORITY

FLOOR TRUSS C32T8G 58'-11" OVERALL
WORLD TRADE CENTER TOWER A-B

FABRICATION BY LACLEDE STEEL COMPANY

FABRICATED AT MADISON, ILLINOIS	DESIGN DRAWING NO. 7-AB1-5 7-AB3-2	PLATE
APPROVED FOR FABRICATION BY JW FOR PONYA DATE 7/12/68	DRAWN BY [illegible] DATE FEB. 24, 1968	
APPROVED FOR FABRICATION BY FOR [illegible] DATE	CHECKED BY J R PAUL DATE FEB 24, 1968	IN CHARGE OF PROD DEV
[illegible]	FABRICATION CONT NO 221	SHEET NO ST2086

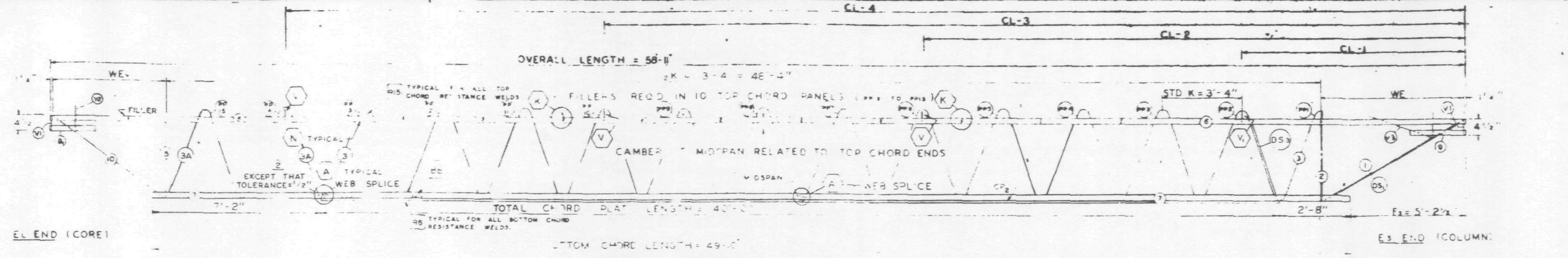

FABRICATION REQUIREMENTS	DESIGN	TOLERANCE
CAMBER AT MIDSPAN	2"	[illegible]
DESIGN DEPTH	29"	± 1/4"
PANEL "K"	[illegible]4"	± 1/4"
OVERALL LENGTH	58'-11"	± 3
WEB DEPTH	31 7/8"	± 1/4"

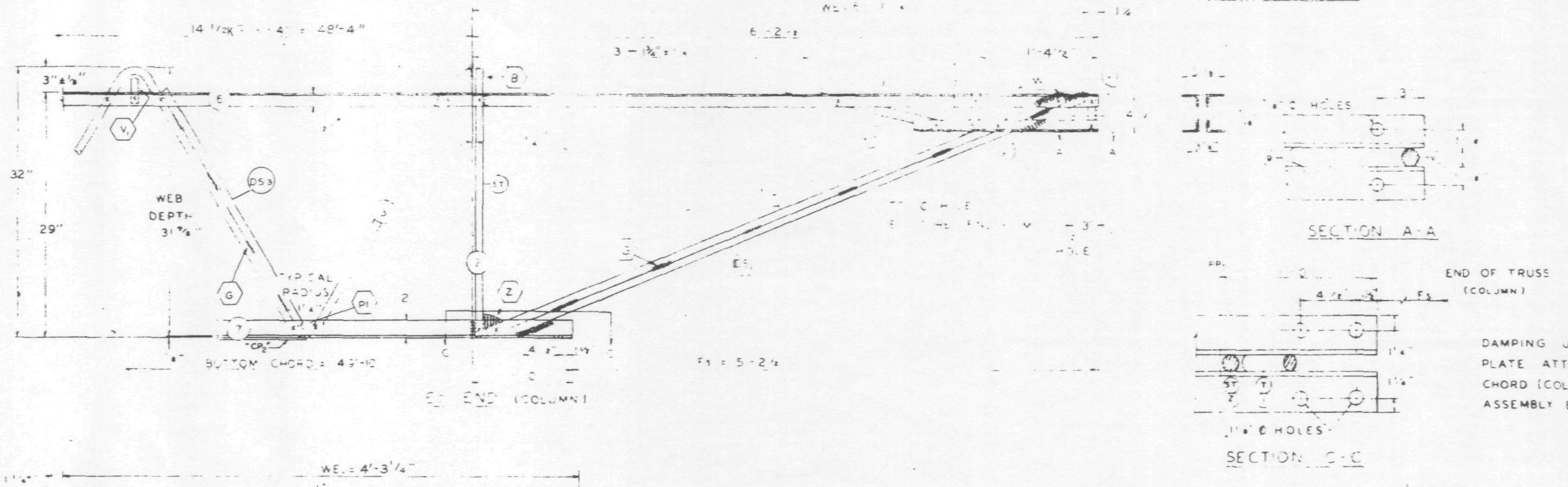

ALL PANEL POINTS RESISTANCE WELDED EX ARC WELDS INDICATED AT SHADED AREAS AND AT BOTTOM CHORD WEB SPLICES.
ALL WELD DETAILS SHOWN ON SHEETS ST290, ST291, ST292, AND ST280.

CHORD PLATE DETAIL SHOWN ON SHEET ST280.
SEE SHEET ST295 FOR V1, V2, & V3 DETAILS.
LETTERS IN HEXAGON INDICATE WELD DETAIL, ie. (A).
LETTERS AND NUMBERS IN SQUARES INDICATE RESISTANCE WELD STRENGTH IDENTIFIED IN THE QUALITY CONTROL PROGRAM, ie. R6.

DAMPING UNIT CONNECTION PLATE ATTACHED TO BOTTOM CHORD (COL END) IN FIELD ASSEMBLY BY CONTRACT WTC 223.00.

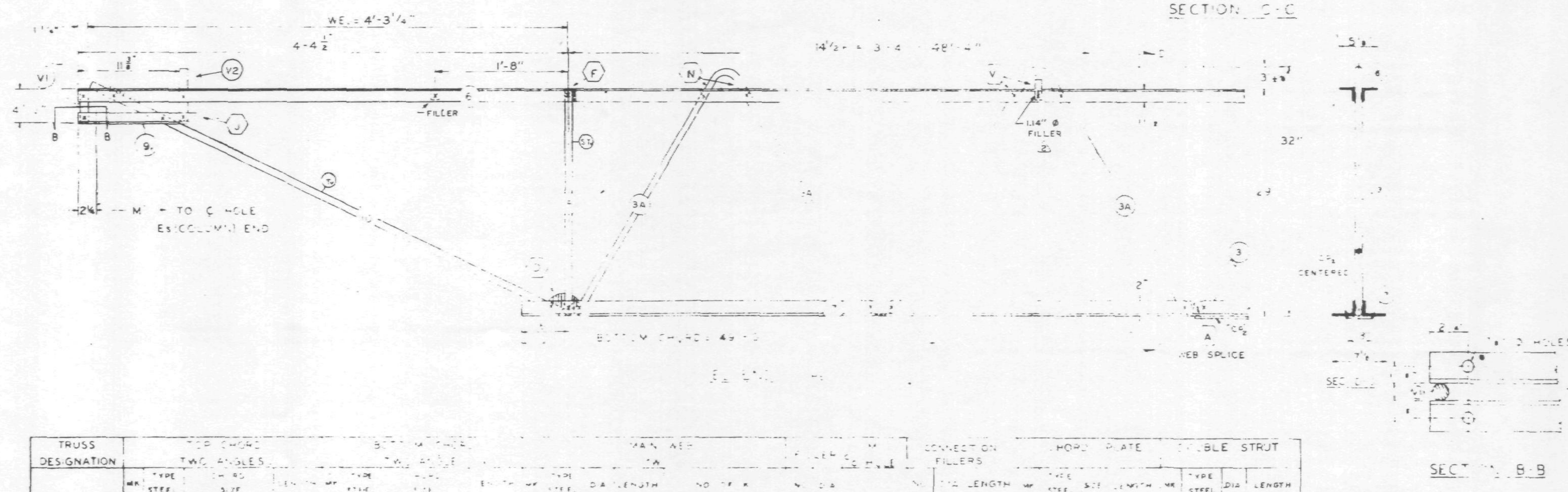

NO.	DATE	REVISION	BY
2	6-27-68	AS NOTED	T.M.C.
1	6-22-68	GENERAL	T.M.C.

REF DRWGS

7-AB1-5	4-15-68
7-AB1-52	7-15-68
7-AB1-53	1-3-68
7-AB4-[illegible] & 50.2	10-20-67
7-AB3-2	1-3-68
7-AB4-50.5	10-20-67

PAINT
LACLEDE ELECTROCOAT
RED NO. 1000

TRUSS DESIGNATION	TOP CHORD TWO ANGLES				BOTTOM CHORD TWO ANGLES				MAIN WEB					FILLER		CONNECTION FILLERS		CHORD PLATE			DOUBLE STRUT			
	MK	TYPE STEEL	CHORD SIZE	LENGTH	MK	TYPE STEEL	CHORD SIZE	LENGTH	MK	TYPE STEEL	DIA	LENGTH	NO. OF K	NO.	DIA	NO.	DIA / LENGTH	MK	TYPE STEEL	SIZE / LENGTH	MK	TYPE STEEL	DIA	LENGTH
C32T8G-58'11	6	A242	2 [illegible]	58[illegible]	7	A36	3 [illegible] 3	49[illegible]	3 / 3A	A36 / A242	1.09 / 1.14	77'-10⅜ / 12'-5½"	12½ 2 3'-4" [illegible]	1	1.09	3 / 1 / 2	1.09 / 1.14 3"	CP2	A36	[illegible] 40'-0"	DS3	A242	.75	5'-8½"

COLUMN END

Es END	TRUSS DESIGNATION	BEARING ANGLES				WE	DIAGONAL "T" STRUT				VERTICAL "ST" STRUT				END STIFFENER MK V1			END STIFFENER MK V3			DOUBLE STRUT			
		MK	TYPE STEEL	CHORD SIZE	LENGTH		MK	TYPE STEEL	DIA	LENGTH	MK	TYPE STEEL	DIA	LENGTH	TYPE STEEL	DIA	LENGTH	TYPE STEEL	DIA	LENGTH	MK	TYPE STEEL	DIA	LENGTH
	C32T8G-58'11	9	A242	2"x1½"x.25	2'-0"	6'-1¼"	1	A36	1.09	6'-3⅛"	2	A36	1.09	2'-7⅞"	A36	1.09	4⅜"	A36	1.09	2'-9½"	DS1	A242	.92	6'-3⅛"

CHECK DIMENSION FOR TRUSS FAB LOCATION OF TRANS TRUSS

CL-1	CL-2	CL-3	CL-4	Fs
9'-6½"	22'-10½"	36'-2½"	49'-6½"	5'-2½"

CORE END

EL END	TRUSS DESIGNATION	BEARING ANGLES				WE	DIAGONAL "T" STRUT				VERTICAL "ST" STRUT				END STIFFENER MK V1			END STIFFENER MK V2			END STIFFENER MK V4			WEB "WC"					WEB "WT"				
		MK	TYPE STEEL	CHORD SIZE	LENGTH		MK	TYPE STEEL	DIA	LENGTH	MK	TYPE STEEL	DIA	LENGTH	TYPE STEEL	DIA	LENGTH	TYPE STEEL	DIA	LENGTH	TYPE STEEL	DIA	LENGTH	MK	TYPE STEEL	PCS	DIA	LENGTH	MK	TYPE STEEL	PCS	DIA	LENGTH
	C32T8G-58'11	9	A242	2"x1½"x.25	1'-1¼"	4'-3¼"	10	A242	1.14	4'-9½"	5	A242	1.14	2'-4¾"	A242	1.14	4½	A242	1.14	7½"	—	—	—	—	—	—	—	—	-	—	—	—	—

STEEL TRUSS DETAILS
FOR
WORLD TRADE CENTER — N.Y.C.
FOR
THE PORT OF NEW YORK AUTHORITY

FLOOR TRUSS C32T8G 58'-11" OVERALL
WORLD TRADE CENTER TOWER A-B

FABRICATION BY LACLEDE STEEL COMPANY
FABRICATED AT MADISON, ILLINOIS
DESIGN DRAWING NO. 7-AB1-5 7-AB3-2 PLATE
APPROVED FOR FABRICATION BY JW FOR P.O.N.Y.A. DATE 7/5/68
DRAWN BY [illegible] DATE FEB 24, 1968
APPROVED FOR FABRICATION BY FOR FABRICATOR DATE
CHECKED BY J.R. PAUL DATE FEB. 24, 1968
IN CHARGE OF PROD. DEV.
SCALED BY A.C. WEBER
FABRICATION CONT NO. WTC 221
SHEET NO. ST[illegible]

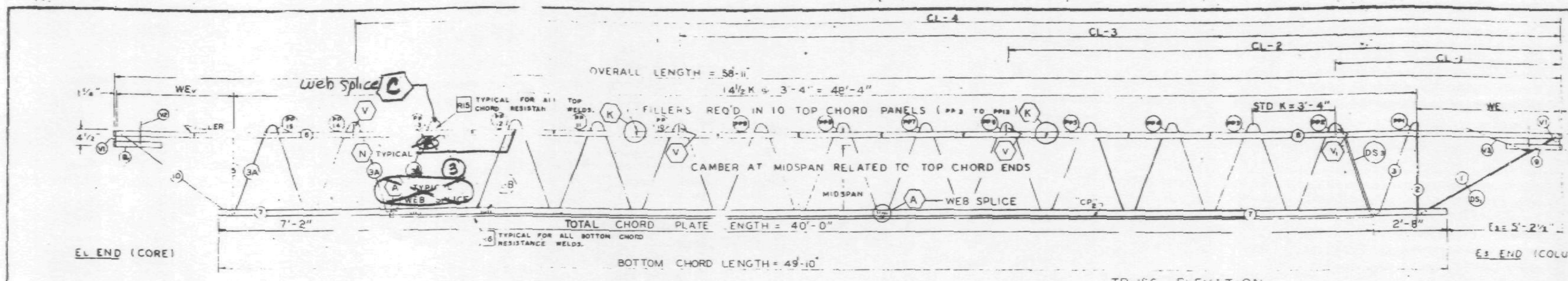

TRUSS ELEVATION

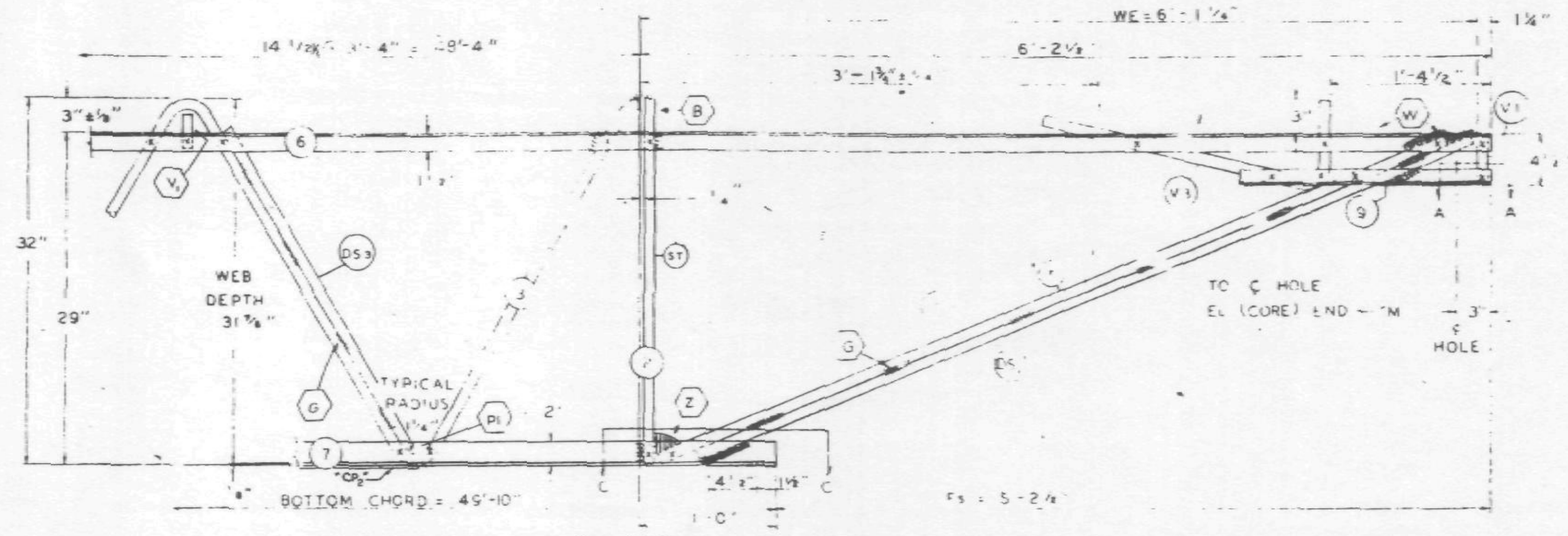

Es END (COLUMN)

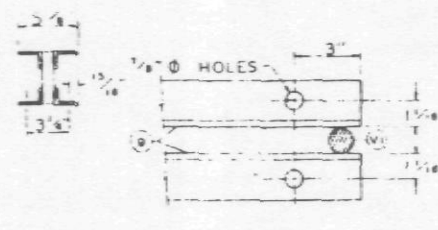

SECTION A-A

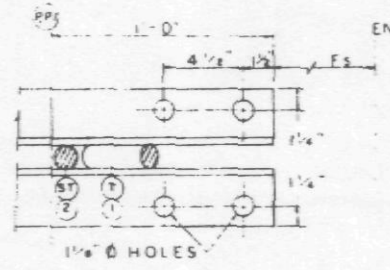

SECTION C-C

END OF TRUSS (COLUMN)

ALL PANEL, POINTS RESISTANCE WELDED
ARC WELDS INDICATED AT SHADED AREAS
AND AT BOTTOM CHORD WEB SPLICES
ALL WELD DETAILS SHOWN ON SHEETS ST290, ST291, ST292,
AND ST280.

CHORD PLATE DETAILS SHOWN ON SHEET ST280.
SEE SHEET ST295 FOR V1, V2, & V3 DETAILS.
LETTERS IN HEXAGON INDICATE WELD DETAIL, ie., (A).
LETTERS AND NUMBERS IN SQUARES INDICATE RESISTANCE WELD STRENGTH IDENTIFIED IN THE QUALITY CONTROL PROGRAM, ie., [R6].

DAMPING UNIT CONNECTION
PLATE ATTACHED TO BOTTOM
CHORD (COL END) IN FIELD
ASSEMBLY BY CONTRACT WTC 223.00.

FABRICATION REQUIREMENTS	DESIGN	TOLERANCE
CAMBER AT MIDSPAN	2"	± 3/8"
DESIGN DEPTH	29"	± 1/4"
PANEL "K"	3'-4"	± 1/4"
OVERALL LENGTH	58'-11"	± 3/8"
WEB DEPTH	31 7/8"	± 1/4"

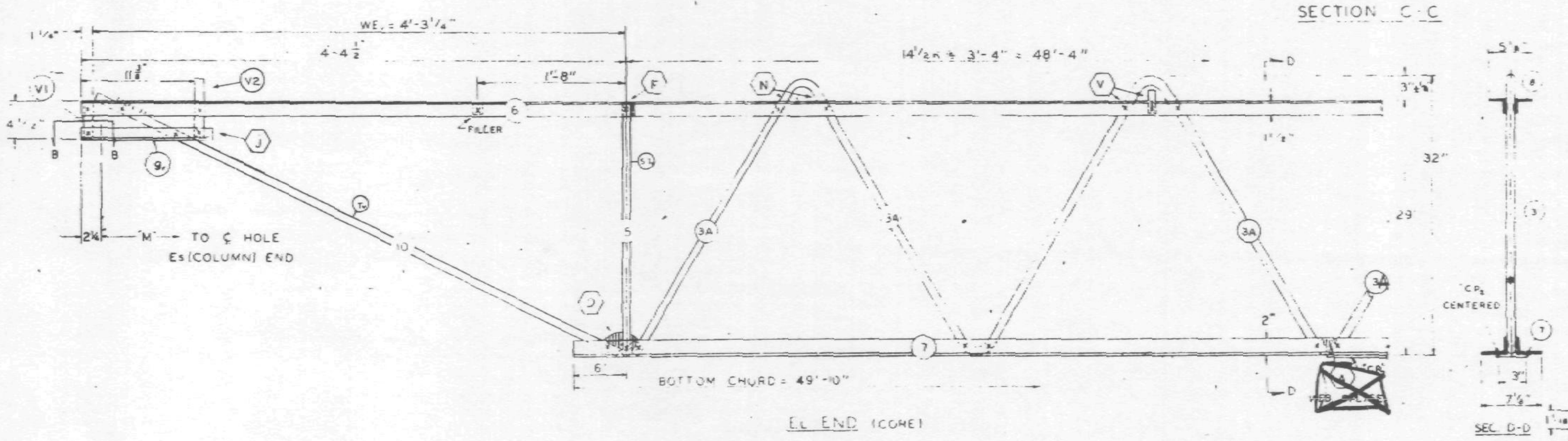

EL END (CORE)

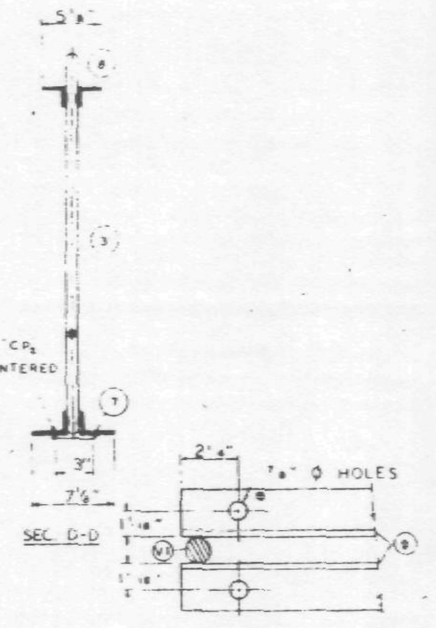

SECTION B-B

NO.	DATE	REVISION	BY
1	6-22-68	GENERAL	T.M.C

REF DRWGS

7-AB1-5	4-15-68
7-AB1-52	2-15-68
7-AB1-53	1-3-68
7-AB4 -0 & 50.2	10-20-67
7-AB3-2	1-3-68
7-AB4-50.5	10-20-67

6/25/68 WCB

PAINT
LACLEDE ELECTROCOAT
RED NO. 10001

TRUSS DESIGNATION	TOP CHORD TWO ANGLES				BOTTOM CHORD TWO ANGLES				MAIN WEB "W"					FILLER		"M" ℄ HOLE	CONNECTION FILLERS			CHORD PLATE				DOUBLE STRUT			
	MK	TYPE STEEL	CHORD SIZE	LENGTH	MK	TYPE STEEL	CHORD SIZE	LENGTH	MK	TYPE STEEL	DIA	LENGTH	NO OF K	NO	DIA		NO	DIA	LENGTH	MK	TYPE STEEL	SIZE	LENGTH	MK	TYPE STEEL	DIA	LENGTH
C32T8G-5811	6	A242	2"x1½"x .31	58'-11"	7	A36	3"x 2" x .33	49'-10"	3 3A	A36 A242	1.09 1.14	77'-10⅜" 12'-5½"	12½ @ 3'-4" = 41'-8" 2 @ 3'-4" = 6'-8"	11	1.09	58'-5¾"	3	1.09 1.14	3" 3"	CP2	A36	¼x3	40'-0"	DS3	A242	.75	2'-8½"

COLUMN END

Es END	TRUSS DESIGNATION	BEARING ANGLES				WE	DIAGONAL "T" STRUT				VERTICAL "ST" STRUT				END STIFFENER MK. V1			END STIFFENER MK. V3			DOUBLE STRUT			
		MK	TYPE STEEL	CHORD SIZE	LENGTH		MK	TYPE STEEL	DIA	LENGTH	MK	TYPE STEEL	DIA	LENGTH	TYPE STEEL	DIA	LENGTH	TYPE STEEL	DIA	LENGTH	MK	TYPE STEEL	DIA	LENGTH
	C32T8G-5811	9	A242	2"x1½"x .25	2'-0"	6'-1¼"	1	A36	1.09	6'-3⅛"	2	A36	1.09	2'-7⅞"	A36	1.09	4⅜"	A36	1.09	2'-9½"	DS1	A242	.92	6'-3⅛"

CHECK DIMENSION FOR TRUSS FAB.

LOCATION OF TRANS. TRUSS

CL-1	CL-2	CL-3	CL-4	Fs
9'-6½"	22'-10½"	36'-2½"	49'-6½"	3'-2½"

CORE END

EL END	TRUSS DESIGNATION	BEARING ANGLES				WE	DIAGONAL "T" STRUT				VERTICAL "ST" STRUT				END STIFFENER MK. V1			END STIFFENER MK. V2			END STIFFENER MK. V4			WEB "Wc"					WEB "WT"				
		MK	TYPE STEEL	CHORD SIZE	LENGTH		MK	TYPE STEEL	DIA	LENGTH	MK	TYPE STEEL	DIA	LENGTH	TYPE STEEL	DIA	LENGTH	TYPE STEEL	DIA	LENGTH	TYPE STEEL	DIA	LENGTH	MK	TYPE STEEL	PCS	DIA	LENGTH	MK	TYPE STEEL	PCS	DIA	LENGTH
	C32T8G-5811	9	A242	2"x1½"x .25	1'-1¼"	4'-3¼"	10	A242	1.14	4'-9½"	5	A242	1.14	2'-4⅜"	A242	1.14	4½"	A242	1.14	7½"	—	—	—	—	—	—	—	—	—	—	—	—	—

STEEL TRUSS DETAILS
FOR
WORLD TRADE CENTER - N.Y.C.
FOR
THE PORT OF NEW YORK AUTHORITY

FLOOR TRUSS C32T8G 58'-11" OVERALL
WORLD TRADE CENTER TOWER A-B

FABRICATION BY LACLEDE STEEL COMPANY

FABRICATED AT MADISON, ILLINOIS		DESIGN DRAWING NO. 7-AB1-5 7-AB3-2	PLATE
APPROVED FOR FABRICATION BY FOR P.O.N.Y.A.	DATE	DRAWN BY [illegible] DATE FEB. 24, 1968	
APPROVED FOR FABRICATION BY FOR FABRICATOR	DATE	CHECKED BY J.R. PAUL DATE FEB. 24, 1968	IN CHARGE OF PROD. DEV.
DETAILED BY A.C. WEBER		FABRICATION CONT. NO. W.T.C. 221	SHEET NO. ST2088

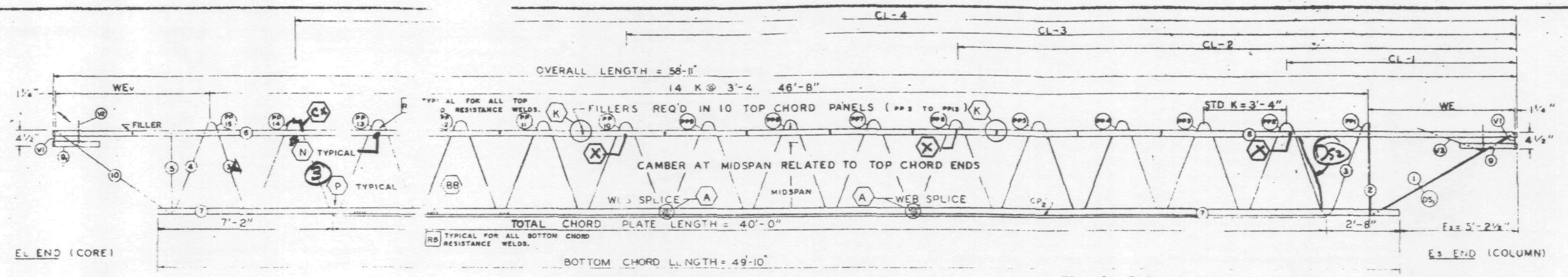

TRUSS ELEVATION

FABRICATION REQUIRMENTS	DESIGN	TOL
CAMBER AT MIDSPAN	1"	[illegible]
DESIGN DEPTH	29"	[illegible]
PANEL "K"	3'-4"	[illegible]
OVERALL LENGTH	58'-11"	[illegible]
WEB DEPTH	31 7/8"	[illegible]

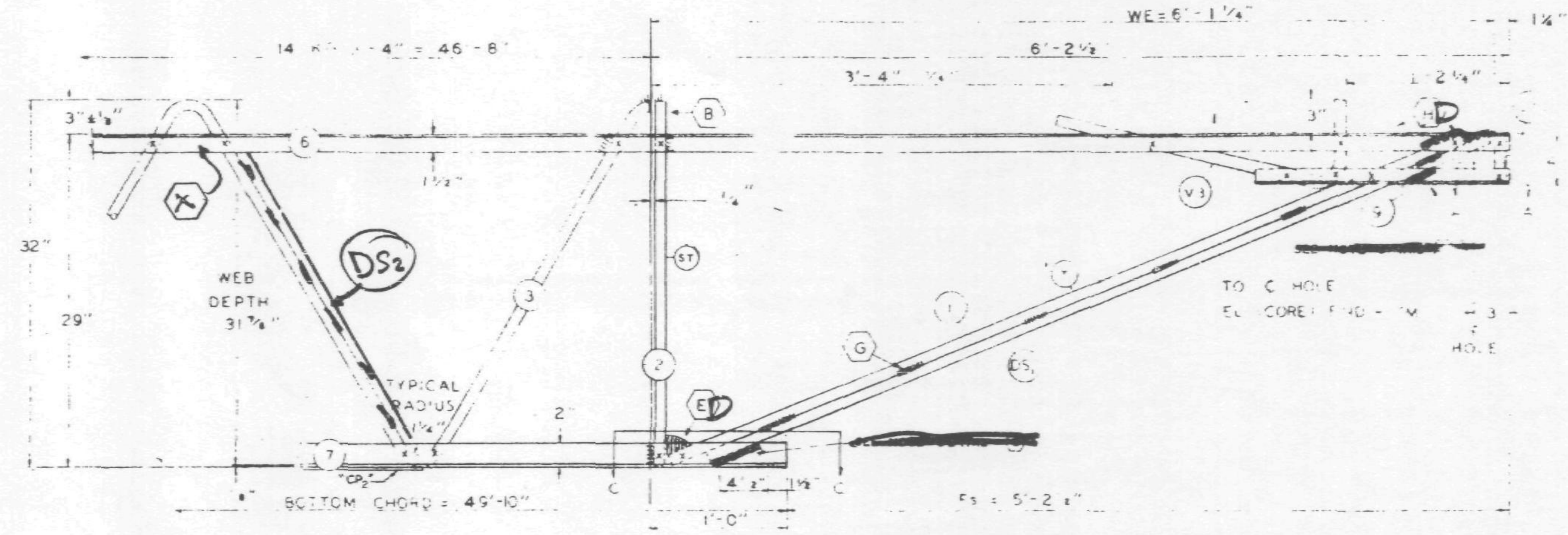

Es END (COLUMN)

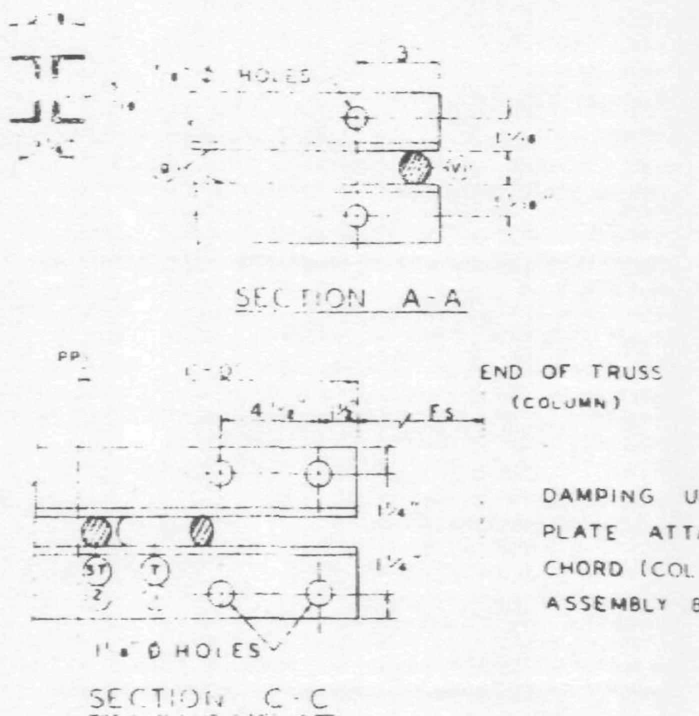

ALL PANEL POINTS RESISTANCE WELDED (X).
ARC WELDS INDICATED AT SHADED AREAS
AND AT BOTTOM CHORD WEB SPLICES (
ALL WELD DETAILS SHOWN ON SHEETS ST290, ST291,
AND ST280.

CHORD PLATE DETAILS SHOWN ON SHEET ST280.
SEE SHEET ST295 FOR V1, V2, & V3 DETAILS.
LETTERS IN HEXAGON INDICATE WELD DETAIL, ie., ⟨A⟩.
LETTERS AND NUMBERS IN SQUARES INDICATE RESISTANCE WELD STRENGTH IDENTIFIED IN THE QUALITY CONTROL PROGRAM, ie., [R6].

DAMPING UNIT CONNECTION
PLATE ATTACHED TO BOTTOM
CHORD (COL END) IN FIELD.
ASSEMBLY BY CONTRACT WTC 223.00.

6/13/68 WAB

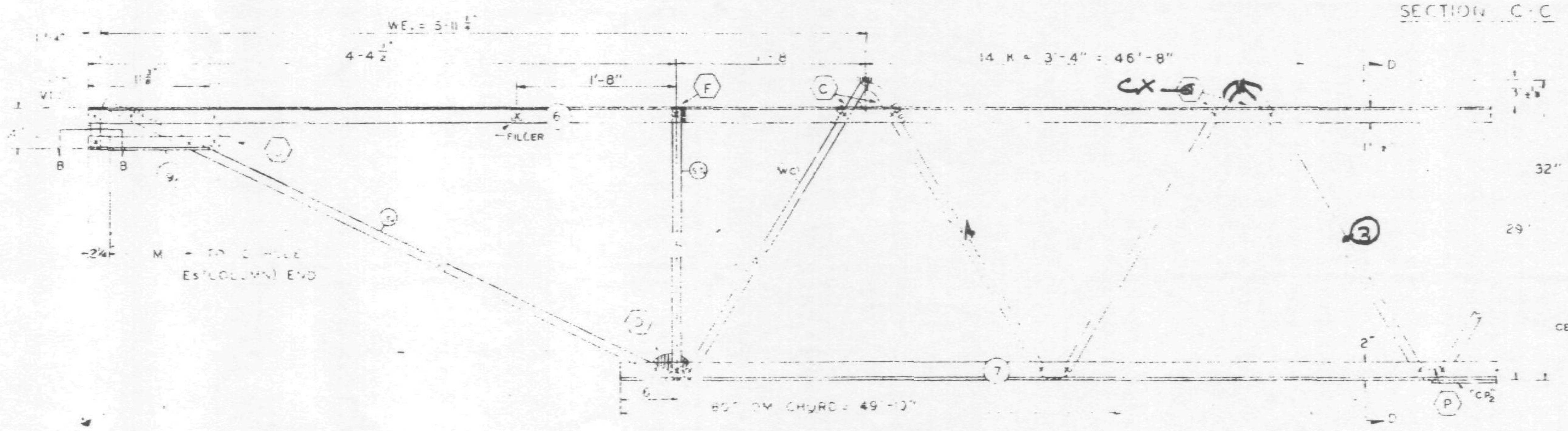

EL END (CORE)

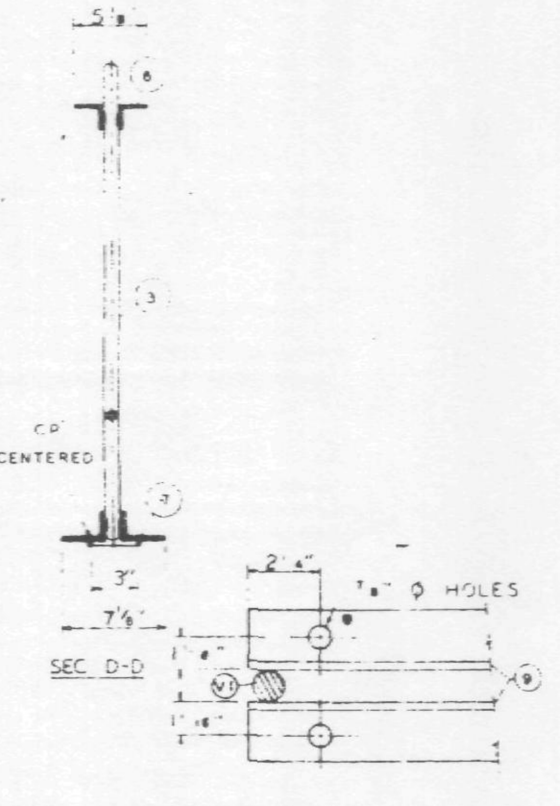

SECTION B-B

4-15-68

REF. DRWGS.

PAINT
LACLEDE ELECTROCOAT
RED NO. 10001

TRUSS DESIGNATION	TOP CHORD TWO ANGLES				BOTTOM CHORD TWO ANGLES				MAIN WEB "W"					FILLER		"M" C-C HOLE	TRUSS DATA		CHORD PLATE			
	MK	TYPE STEEL	CHORD SIZE	LENGTH	MK	TYPE STEEL	CHORD SIZE	LENGTH	MK	TYPE STEEL	DIA	LENGTH	NO OF K	NO	DIA				MK	TYPE STEEL	SIZE	LENGTH
C32T8G-5811	6	A242	2"x[illegible]	58'-11"	7	A36	3"x2"x.33	49'-10"	3	A36	1.09	87'-2½"	14 @ 3'-4" = 46'-8"	11	1.09	58'-5¾"			CP2	A36	¼x3	40'-0"

Es END	TRUSS DESIGNATION	BEARING ANGLES				WE	DIAGONAL "T" STRUT				VERTICAL "ST" STRUT				END STIFFENER MK V1			END STIFFENER MK V3			DOUBLE STRUT			
		MK	TYPE STEEL	CHORD SIZE	LENGTH		MK	TYPE STEEL	DIA	LENGTH	MK	TYPE STEEL	DIA	LENGTH	TYPE STEEL	DIA	LENGTH	TYPE STEEL	DIA	LENGTH	MK	TYPE STEEL	DIA	LENGTH
	C32T8G-5811	9	A242	2"x1½"x.25	1'-10"	6'-1¼"	1	A36	1.09	6'-3⅛"	2	A36	1.09	2'-7⅞"	A36	1.09	4⅝"	A36	1.09	2'-9½"	DS1	A242	.75	6'-3⅛"
																					DS2	A242	.75	

CHECK DIMENSION FOR TRUSS FAB. LOCATION OF TRANS. TRUSS				
CL-1	CL-2	CL-3	CL-4	Fs
9'-6½"	22'-10½"	36'-2½"	49'-6½"	5'-2½"

EL END (CORE END)	TRUSS DESIGNATION	BEARING ANGLES				WEv	DIAGONAL "T" STRUT				VERTICAL "ST" STRUT				END STIFFENER MK. V1			END STIFFENER			END STIFFENER MK. V4			WEB "Wc"					WEB "WT"					WEB		
		MK	TYPE STEEL	CHORD SIZE	LENGTH		MK	TYPE STEEL	DIA	LENGTH	MK	TYPE STEEL	DIA.	LENGTH	TYPE STEEL	DIA	LENGTH	TYPE STEEL	DIA.	LENGTH	TYPE STEEL	DIA.	LENGTH	MK	TYPE STEEL	PCS	DIA	LENGTH	MK	TYPE STEEL	PCS	DIA.	LENGTH	MK		DIA.
	C32T8G-5811	9	A242	2"x1½"x.25	[illegible]	5'-1½"	10	A242	1.14	4'-9½"	5	A242	1.14	2'-4¾"	A242	1.14	4½"	A242	1.14	7½"	—	—	—	4	A242	1	1.14	3'-0½"	-	—	—	—	—	3A	A242	1.14

STEEL TRUSS DETAILS
FOR
WORLD TRADE CENTER
FOR
THE PORT OF NEW YORK AUTHORITY

FLOOR TRUSS C32T8G 58'-11" OVERALL
WORLD TRADE CENTER TOWER A-B

FABRICATION BY LACLEDE STEEL COMPANY
FABRICATED AT MADISON, ILLINOIS
APPROVED FOR FABRICATION DATE BY FOR P.O.N.Y.A. — DRAWN BY — DATE FEB 24, 1968
APPROVED FOR FABRICATION DATE BY FOR FABRICATOR — CHECKED BY — DATE FEB 24, 1968
DETAILED BY A.C. WEBER

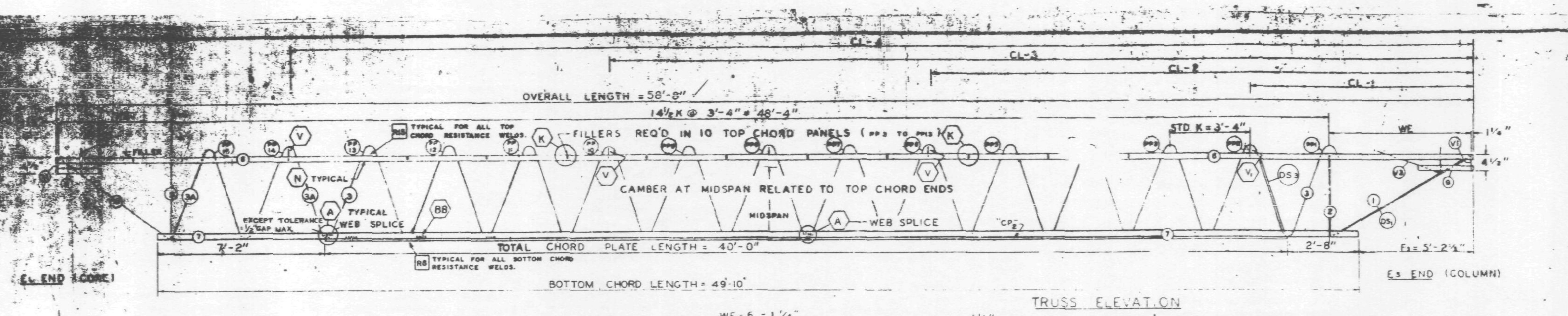

FABRICATION REQUIREMENTS	DESIGN	TOLERANCE
CAMBER AT MIDSPAN	2"	± 3/8"
DESIGN DEPTH	29"	± 1/4"
PANEL "K"	3'-4"	± 1/4"
OVERALL LENGTH	58'-8"	± 3/8"
WEB DEPTH	31 7/8"	± 1/4"

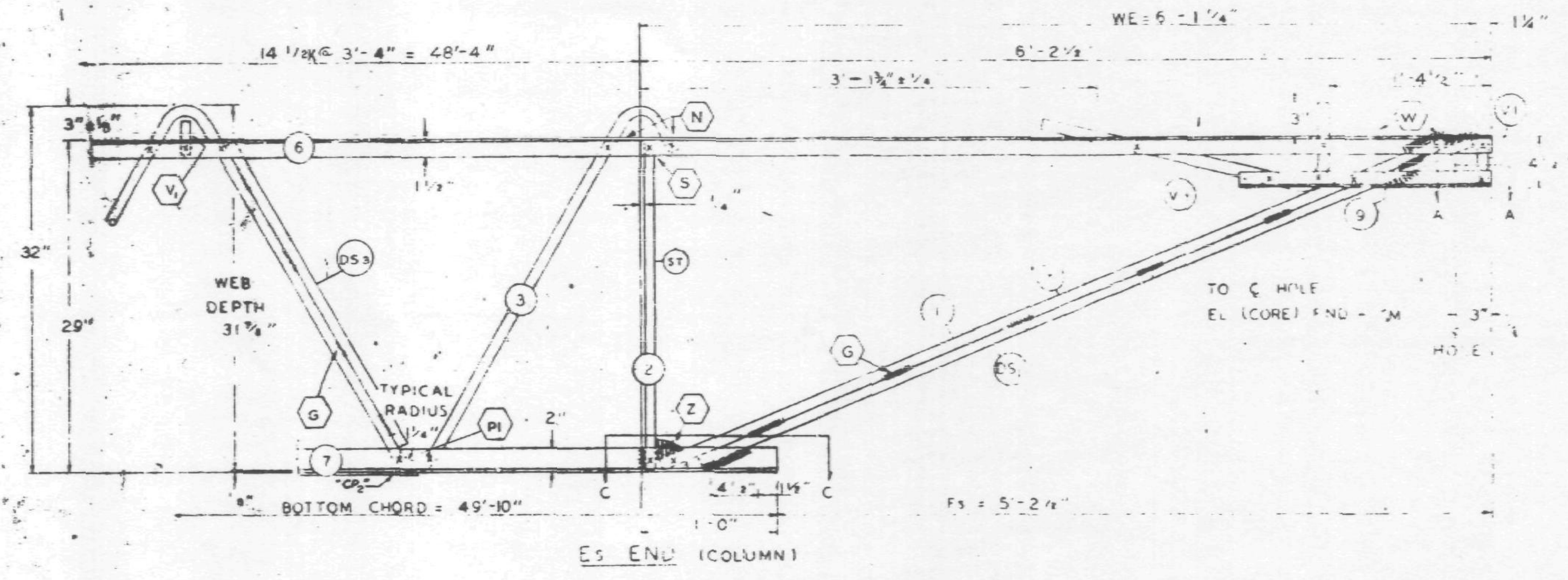

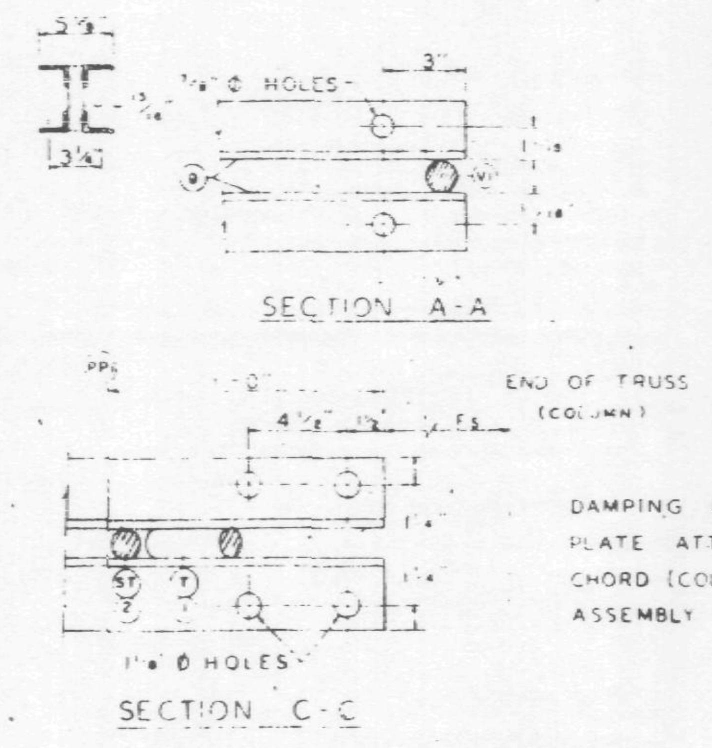

ALL PANEL POINTS RESISTANCE WELDED
ARC WELDS INDICATED AT SHADED AREAS
AND AT BOTTOM CHORD WEB SPLICES
ALL WELD DETAILS SHOWN ON SHEETS ST290, ST291, ST292,
AND ST280.

CHORD PLATE DETAILS SHOWN ON SHEET ST280.
SEE SHEET ST295 FOR V1, V2, & V3 DETAILS.
LETTERS IN HEXAGON INDICATE WELD DETAIL, ie., (A).
LETTERS AND NUMBERS IN SQUARES INDICATE RESISTANCE WELD STRENGTH IDENTIFIED IN THE QUALITY CONTROL PROGRAM, ie., [R6].

DAMPING UNIT CONNECTION
PLATE ATTACHED TO BOTTOM
CHORD (COL END) IN FIELD
ASSEMBLY BY CONTRACT WTC 223.00.

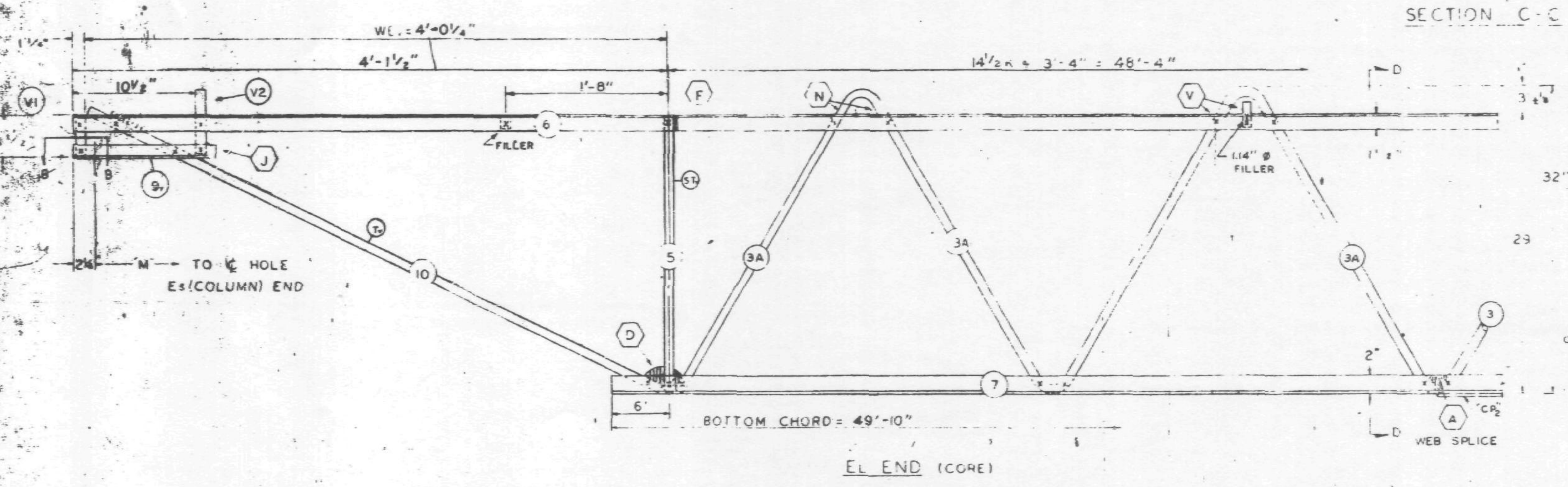

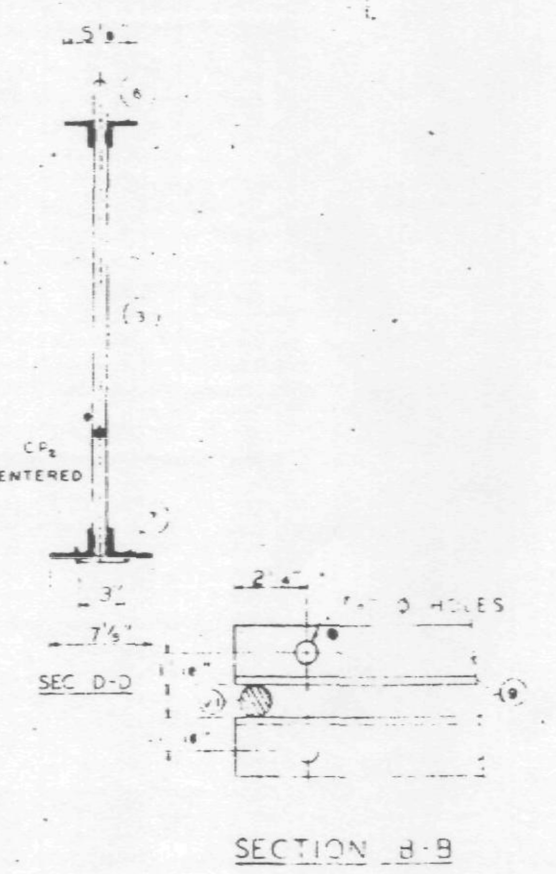

NO.	DATE	REVISION	BY

REF DRWGS

7-AB1-5	10-15-68
7-AB1-52	2-15-68
7-AB1-53	7-22-68
7-AB4	8-1-68
7-AB3-2	1-3-68
7-AB4-503	10-28-67

PAINT
LACLEDE ELECTROCOAT
RED NO 1000I

TRUSS DESIGNATION	TOP CHORD TWO ANGLES				BOTTOM CHORD TWO ANGLES				MAIN WEB "W"					FILLER		"M" ℄ HOLE	CONNECTION FILLERS			CHORD PLATE				DOUBLE STRUT			
	MK	TYPE STEEL	CHORD SIZE	LENGTH	MK	TYPE STEEL	CHORD SIZE	LENGTH	MK	TYPE STEEL	DIA	LENGTH	NO OF K	NO	DIA		NO	DIA	LENGTH	MK	TYPE STEEL	SIZE	LENGTH	MK	TYPE STEEL	DIA	LENGTH
C32T8H 588	6	A242	2"x1½"x3½	58'-8"	7	A36	3"x2"x33	49'-10"	3 3A	A36 A242	1.09 1.14	78'-3¾ 12'-5½"	12½@3'-4" = 41'-8" 2 @ 3'-4" = 6'-8"	11	1.09	58'-2¾"	3 1	1.09 1.14	3" 3"	CP2	A36	¼x3	40'-0"	DS3	A242	.75	2'-6¾"

COLUMN END	TRUSS DESIGNATION	BEARING ANGLES				WE	DIAGONAL "T" STRUT				VERTICAL "ST" STRUT				END STIFFENER MK. V1			END STIFFENER MK. V3			DOUBLE STRUT			
Es END		MK	TYPE STEEL	CHORD SIZE	LENGTH		MK	TYPE STEEL	DIA	LENGTH	MK	TYPE STEEL	DIA	LENGTH	TYPE STEEL	DIA	LENGTH	TYPE STEEL	DIA	LENGTH	MK	TYPE STEEL	DIA	LENGTH
	C32T8H 588	9	A242	2"x1½"x29	2'-3"	6'-1¼"	1	A36	[illegible]	[illegible]'-8¾"	2	A36	1.09	2'-4⅞"	A36	1.09	4⅞"	A36	1.09	2'-9⅛"	DS1	A242	.92	6'-3⅛"

CHECK DIMENSION FOR TRUSS FAB. LOCATION OF TRANS TRUSS				
CL-1	CL-2	CL-3	CL-4	Fs
9'-6½"	22'-10½"	36'-2½"	49'-6½"	[illegible]-2½"

TRUSS DESIGNATION	BEARING ANGLES				WE	DIAGONAL "T" STRUT				VERTICAL "ST" STRUT				END STIFFENER MK. V1			END STIFFENER MK. V2			END STIFFENER MK. V4			WEB "Wc"					WEB "WT"				
	MK	TYPE STEEL	CHORD SIZE	LENGTH		MK	TYPE STEEL	DIA	LENGTH	MK	TYPE STEEL	DIA	LENGTH	TYPE STEEL	DIA	LENGTH	TYPE STEEL	DIA	LENGTH	TYPE STEEL	DIA	LENGTH	MK	TYPE STEEL	PCS	DIA	LENGTH	MK	TYPE STEEL	PCS	DIA	LENGTH
C32T8H 588	9	A242	2"x1½"x25	1'-0½"	4'-0¼	10	A242	1.14	4'-7"	5	A242	1.14	2'-4⅞"	A242	1.14	4⅞	A242	1.14	7⅞	—	—	—	—	—	—	—	—	—	—	—	—	—

STEEL TRUSS DETAILS
FOR
WORLD TRADE CENTER - N.Y.C.
FOR
THE PORT OF NEW YORK AUTHORITY

FLOOR TRUSS C32T8H 58'-8" OVERALL
WORLD TRADE CENTER TOWER A-B

FABRICATION BY LACLEDE STEEL COMPANY

FABRICATED AT MADISON, ILLINOIS		DESIGN DRAWING NO 7-AB1-5 7-AB3-2	PLATE
APPROVED FOR FABRICATION FOR PONYA James White	DATE 4/25/69	DRAWN BY [illegible] DATE APRIL 15, 1969	
APPROVED FOR FABRICATION BY FOR FABRICATION	DATE	CHECKED BY T.M.CHURA DATE APRIL 15, 1969	IN CHARGE OF PROD DEV
DETAILED [illegible]		FABRICATION CONT NO [illegible] 221	SHEET NO ST208H

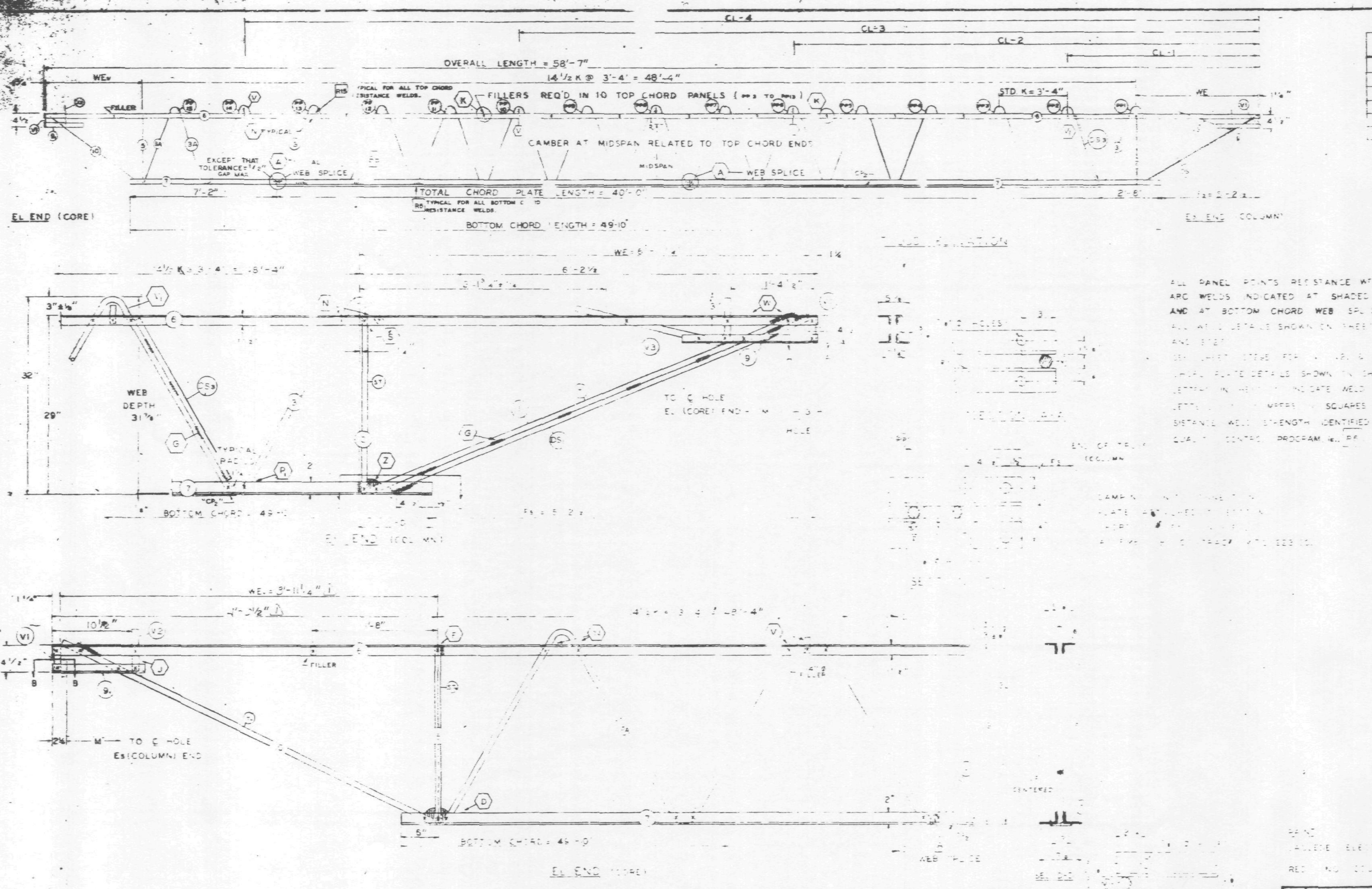

ALL PANEL POINTS RESISTANCE WELDED
ARC WELDS INDICATED AT SHADED AREAS
AND AT BOTTOM CHORD WEB SPLICES
ALL WELD DETAILS SHOWN ON SHEET ST290, ST291, ST292, ST293

FABRICATION REQUIREMENTS	DESIGN	TOLERANCE
CAMBER AT MIDSPAN	1 2"	[illegible]
DESIGN DEPTH	29"	± 1/4"
PANEL "K"	3'-4"	1/4"
OVERALL LENGTH	58'-	± 3/8"
WEB DEPTH	31 7/8	± 1/4"

NO	DATE	REVISION	BY
1	2-2-69	WE DIMENSION	T.M.C.

REF DRWGS

7-AB1-5	10-15-68
7-AB-52	2-15-68
7-AB1-53	7-28-68
7-AB4-50	8-1-68
7-AB3-2	1-3-68
7-AB4-50 S	10-20-67

TRUSS DESIGNATION	TOP CHORD TWO ANGLES				BOTTOM CHORD TWO ANGLES				MAIN WEB "W"					FILLER M ℄ HOLE			CONNECTION FILLERS			CHORD PLATE				DOUBLE STRUT			
	MK	TYPE STEEL	CHORD SIZE	LENGTH	MK	TYPE STEEL	CHORD SIZE	LENGTH	MK	TYPE STEEL	DIA	LENGTH	NO OF K	NO	DIA		NO	DIA	LENGTH	MK	TYPE STEEL	SIZE	LENGTH	MK	TYPE STEEL	SIZE	LENGTH
C32T8J-587	6	A242	2"x1½"x 3	58'-7"	7	A36	3 x 2" x 35	49'-10"	3 / 3A	A36 / A242	1.09 / 1.14	7'-3⅜" / 12'-5½"	12½@3'-4" = 41'-8" / 2 @ 3'-4" = 6'-8"	11	1.09	58'-9¾	3 / 1	1.09 / 1.14	3" / 3"	CP	A36	[illegible]	40'-0"	DS	A242	[illegible]	2'-6¾"

COLUMN END

TRUSS DESIGNATION	BEARING ANGLES				WE	DIAGONAL "T" STRUT				VERTICAL "ST" STRUT				END STIFFENER MK V1			END STIFFENER MK V3			DOUBLE STRUT			
	MK	TYPE STEEL	CHORD SIZE	LENGTH		MK	TYPE STEEL	DIA	LENGTH	MK	TYPE STEEL	DIA	LENGTH	TYPE STEEL	DIA	LENGTH	TYPE STEEL	DIA	LENGTH	MK	TYPE STEEL	DIA	LENGTH
C32T8J-587	9	A242	2"x1½"x.25	2'-3"	6'-1¼"		A36	1.09	6'-3⅛"	2	A36	1.09	2'-4⅞"	A36	1.09	4⅞"	A[illegible]	[illegible]	2'-9½"	DS	A242	.92	6'-3½"

CHECK DIMENSION FOR TRUSS FAB LOCATION OF TRANS TRUSS

CL-1	CL-2	CL-3	CL-4	Es
9'-6½"	22'-10½"	36'-2½"	49'-6½"	5'-2½"

CORE END

TRUSS DESIGNATION	BEARING ANGLES				WE	DIAGONAL "T" STRUT				VERTICAL "ST" STRUT				END STIFFENER MK V1			END STIFFENER MK V2			END STIFFENER MK V4			WEB "WC"					WEB "WT"				
	MK	TYPE STEEL	CHORD SIZE	LENGTH	⚠1	MK	TYPE STEEL	DIA	LENGTH	MK	TYPE STEEL	DIA	LENGTH	TYPE STEEL	DIA	LENGTH	TYPE STEEL	DIA	LENGTH	TYPE STEEL	DIA	LENGTH	MK	TYPE STEEL	PCS	DIA	LENGTH	MK	TYPE STEEL	PCS	DIA	LENGTH
C32T8J-587	[illegible]	A242	[illegible] .25	1'-0½"	[illegible]	10	A242	1.14	4'-6⅛"	5	A242	1.14	2'-4½"	A242	1.14	4"	A242	1.14	7"	—	—	—	—	—	—	—	—	—	—	—	—	—

STEEL TRUSS DETAILS
FOR
WORLD TRADE CENTER — N.Y.C.
FOR
THE PORT OF NEW YORK AUTHORITY

FLOOR TRUSS C32T8J 58'-7" OVERALL
WORLD TRADE CENTER TOWER A-B

FABRICATION BY LACLEDE STEEL COMPANY
FABRICATED AT MADISON, ILLINOIS
DESIGN DRAWING NO. 7-AB1-5, 7-AB3-2 PLATE
APPROVED FOR FABRICATION ... White FOR P.O.N.Y.A. DATE 2/28/69
DRAWN BY [illegible] DATE JAN. 7, 1969
APPROVED FOR FABRICATION BY FOR FABRICATOR DATE
LACLEDE STEEL CO
CHECKED BY T.M. CHURA DATE JAN. 7, 1969
IN CHARGE OF PROD. DEV.
DETAILED BY A.C. WEBER
FABRICATION CONT NO W.T.C. 221
SHEET NO. [illegible]

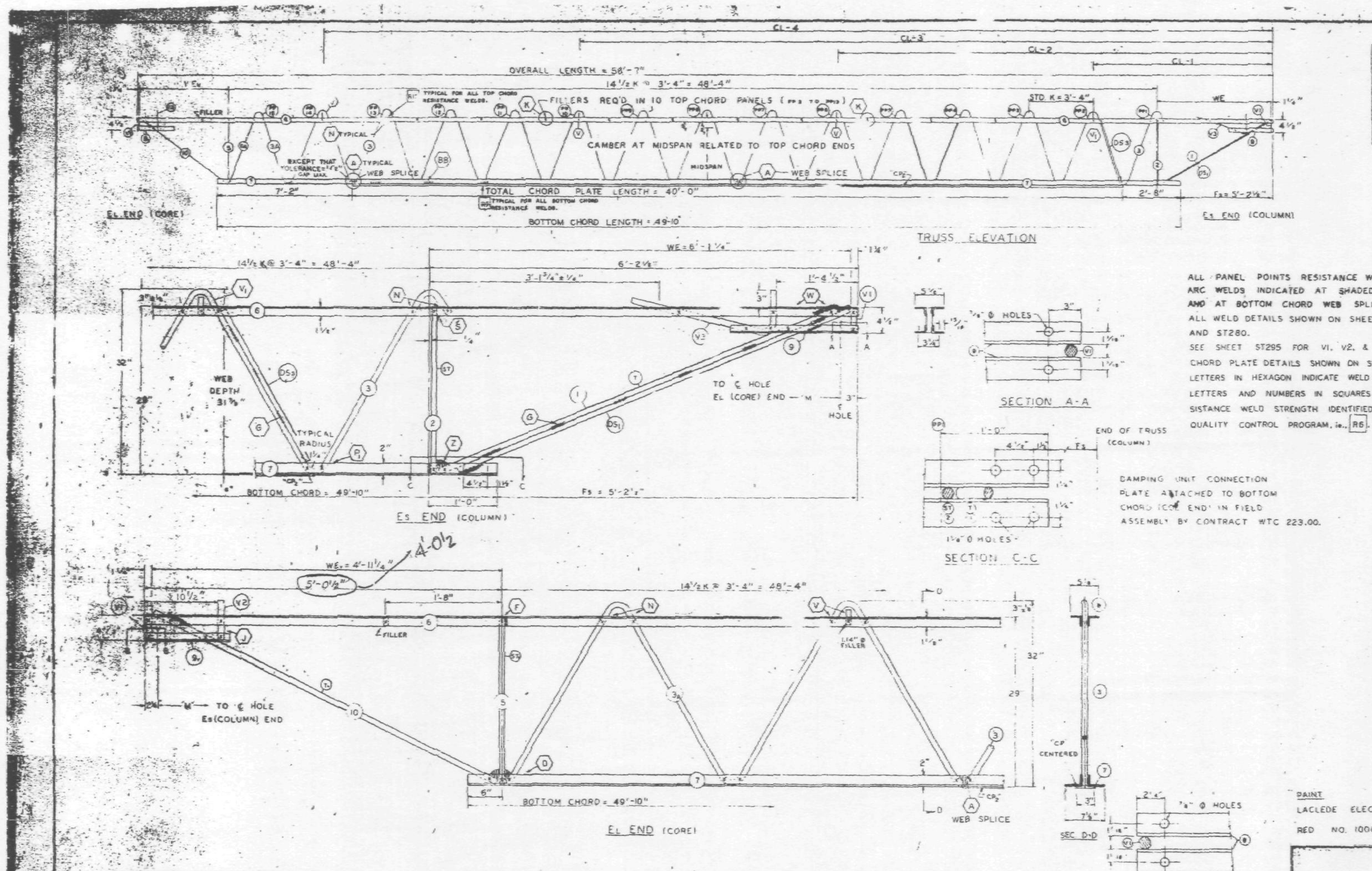

FABRICATION REQUIREMENTS

	DESIGN	TOLERANCES
CAMBER AT MIDSPAN	2"	+-3/8"
DESIGN DEPTH	29"	± 1/4"
PANEL "K"	3'-4"	± 1/4"
OVERALL LENGTH	58'-7"	± 3/8"
WEB DEPTH	31 7/8"	± 1/4"

ALL PANEL POINTS RESISTANCE WELDED (X).
ARC WELDS INDICATED AT SHADED AREAS
AND AT BOTTOM CHORD WEB SPLICES
ALL WELD DETAILS SHOWN ON SHEETS ST290, ST291, ST292, ST293 AND ST280.
SEE SHEET ST295 FOR V1, V2, & V3 DETAILS.
CHORD PLATE DETAILS SHOWN ON SHEET ST280.
LETTERS IN HEXAGON INDICATE WELD DETAIL, ie., (A).
LETTERS AND NUMBERS IN SQUARES INDICATE RESISTANCE WELD STRENGTH IDENTIFIED IN THE QUALITY CONTROL PROGRAM, ie., [R6].

DAMPING UNIT CONNECTION PLATE ATTACHED TO BOTTOM CHORD (CORE END) IN FIELD ASSEMBLY BY CONTRACT WTC 223.00.

TRUSS DESIGNATION	TOP CHORD TWO ANGLES MK	TYPE STEEL	CHORD SIZE	LENGTH	BOTTOM CHORD TWO ANGLES MK	TYPE STEEL	CHORD SIZE	LENGTH	MAIN WEB "W" MK	TYPE STEEL	DIA	LENGTH	NO. OF K	FILLER NO	DIA	"M" C-C HOLE	CONNECTION FILLERS NO	DIA	LENGTH	CHORD PLATE MK	TYPE STEEL	SIZE	LENGTH	DOUBLE STRUT MK	TYPE STEEL	SIZE	LENGTH
C32T8J-587	6	A242	2"x1½"x.31	58'-7"	7	A36	3"x2"x.33	49'-10"	3 / 3A	A36 / A242	1.09 / 1.14	[illegible] / 12'-5½"	12½K@3'-4" = 41'-8" / 2@3'-4" = 6'-8"	11	1.09	58'-9¾"	3 / 1	1.09 / 1.14	3" / 3"	CP1	A36	⅝x3"	40'-0"	DS3	A242	.75	2'-6¾"

COLUMN END

ES END	TRUSS DESIGNATION	BEARING ANGLES MK	TYPE STEEL	CHORD SIZE	LENGTH	WE	DIAGONAL "T" STRUT MK	TYPE STEEL	DIA	LENGTH	VERTICAL "ST" STRUT MK	TYPE STEEL	DIA	LENGTH	END STIFFENER MK V1 TYPE STEEL	DIA	LENGTH	MK V2 TYPE STEEL	DIA	LENGTH	DOUBLE STRUT MK	TYPE STEEL	DIA	LENGTH
	C32T8J-587	9	A242	2"x1½"x.25	2'-3"	6'-1¼"	1	A36	1.09	6'-3¼"	2	A36	1.09	2'-4⅞"	A36	1.09	4⅞"	A36	1.09	2'-9½"	DS1	A242	.92	6'-3⅛"

CHECK DIMENSION FOR TRUSS FAB LOCATION OF TRANS TRUSS

CL-1	CL-2	CL-3	CL-4	FS
9'-6½"	22'-10½"	36'-2½"	49'-6½"	5'-2½"

CORE END

EL END	TRUSS DESIGNATION	BEARING ANGLES MK	TYPE STEEL	CHORD SIZE	LENGTH	WE	DIAGONAL "T" STRUT MK	TYPE STEEL	DIA	LENGTH	VERTICAL "ST" STRUT MK	TYPE STEEL	DIA	LENGTH	END STIFFENER MK V1 TYPE STEEL	DIA	LENGTH	MK V2 TYPE STEEL	DIA	LENGTH	MK V4 TYPE STEEL	DIA	LENGTH	WEB "WC" MK	TYPE STEEL	PCS	DIA	LENGTH	WEB "WT" MK	TYPE STEEL	PCS	DIA	LENGTH
[illegible]	[illegible]	[illegible]	A242	2"x1½"x.25	1'-0½"	5'-0½"	10	A242	1.14	4'-6⅛"	5	A242	1.14	2'-4⅛"	A242	1.14	4⅞"	A242	1.14	7⅞"	—	—	—	—	—	—	—	—	—	—	—	—	—

NO.	DATE	REVISION	BY

REF DRWGS

7-AB1-5	10-15-66
7-AB1-52 / 7-AB1-53	2-15-66 / 7-22-66
7-AB4-50	8-1-66
7-AB3-2	1-3-66
7-AB4-50.5	10-20-67

PAINT
LACLEDE ELECTROCOAT
RED NO. 10001

STEEL TRUSS DETAILS
FOR
WORLD TRADE CENTER - N.Y.C.
FOR
THE PORT OF NEW YORK AUTHORITY

FLOOR TRUSS C32T8J 58'-7" OVERALL
WORLD TRADE CENTER TOWER A-B

FABRICATION BY LACLEDE STEEL COMPANY
FABRICATED AT MADISON, ILLINOIS
DESIGN DRAWING NO. 7-AB1-5 7-AB3-2 PLATE
APPROVED FOR FABRICATION BY ______ FOR P.O.N.Y.A. DATE
DRAWN BY [illegible] DATE JAN. 7, 1969
APPROVED FOR FABRICATION BY ______ FOR FABRICATOR DATE
CHECKED BY T.M. CHURA DATE JAN. 7, 1969
IN CHARGE OF PROD. DEV.
DETAILED BY A.C. WEBER
FABRICATION CONT NO. W.T.C. 221
SHEET NO. ST808

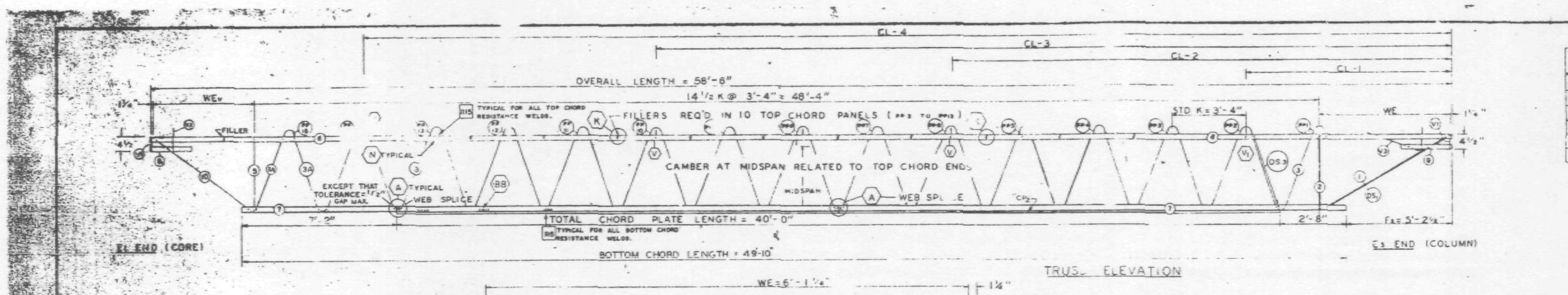

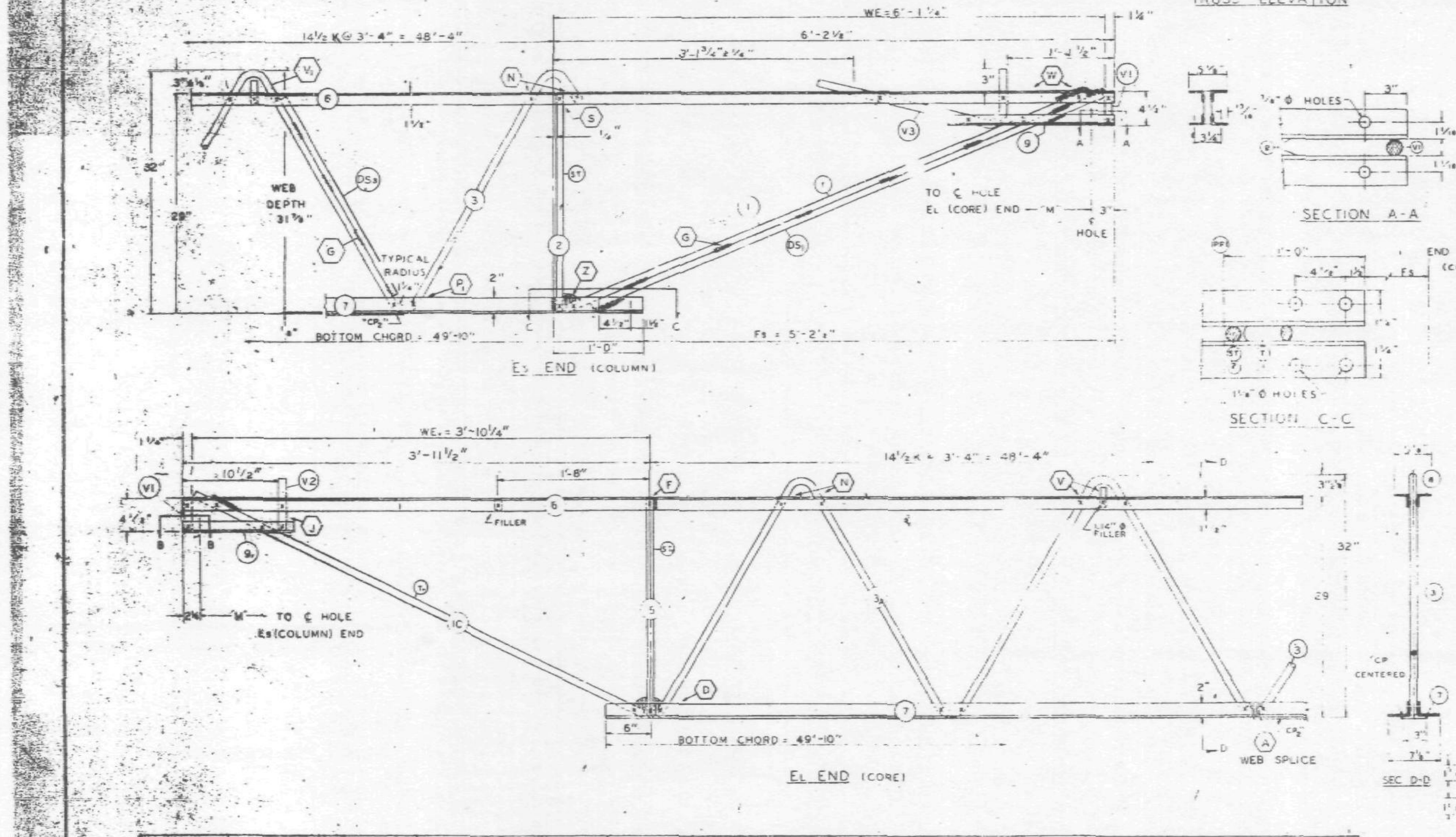

ALL PANEL POINTS RESISTANCE WELDED (x)
ARC WELDS INDICATED AT SHADED AREAS
AND AT BOTTOM CHORD WEB SPLICE
ALL WELD DETAILS SHOWN ON SHEET ST290, ST29.. ..ST293
AND ST280.
SEE SHEET ST295 FOR V1, V2, & V3 DETAILS.
CHORD PLATE DETAILS SHOWN ON SHEET ST280.
LETTERS IN HEXAGON INDICATE WELD DETAIL, ie.. (A).
LETTERS AND NUMBERS IN SQUARES INDICATE RESISTANCE WELD STRENGTH IDENTIFIED IN THE QUALITY CONTROL PROGRAM, ie.. [R6].

DAMPING UNIT CONNECTION
PLATE ATTACHED TO BOTTOM
CHORD (COL END) IN FIELD
ASSEMBLY BY CONTRACT WTC 223.00.

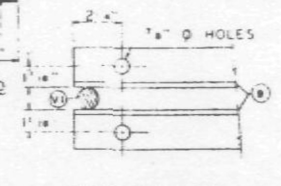

FABRICATION REQUIRMENTS	DESIGN	TOLERANCE
CAMBER AT MIDSPAN	2"	±-3/8"
DESIGN DEPTH	29"	± 1/4"
PANEL "K"	3'-4"	± 1/4"
OVERALL LENGTH	58'-6"	± 3/8"
WEB DEPTH	31 7/8"	± 1/4"

NO	DATE	REVISION	BY

REF DRWGS

7-AB1-5	10-15-68
7-AB1-52	2-15-68
7-AB1-53	7-22-68
7-AB4-50	8-1-68
7-AB3-2	1-3-68
7-AB4-505	10-20-67

PAINT
LACLEDE ELECTROCOAT
RED NO 1000

TRUSS DESIGNATION	TOP CHORD TWO ANGLES				BOTTOM CHORD TWO ANGLES				MAIN WEB "W"					FILLER		"M" C/C HOLE	CONNECTION FILLERS			CHORD PLATE				DOUBLE STRUT			
	MK.	TYPE STEEL	CHORD SIZE	LENGTH	MK	TYPE STEEL	CHORD SIZE	LENGTH	MK	TYPE STEEL	DIA.	LENGTH	NO OF K	NO	DIA		NO.	DIA.	LENGTH	MK	TYPE STEEL	SIZE	LENGTH	MK	TYPE STEEL	SIZE	LENGTH
C32T8K-586	6	A242	2"x1½"x.31	58'-6"	7	A36	3"x2"x.33	49'-10"	3 3A	A36 A242	1.09 1.14	78'-3¾" 12'-5½"	12½@3'-4" = 41'-8" 2@3'-4" = 6'-8"	11	1.09	58 0 3/4	3 1	1.09 1.14	3" 3"	CP	A36	[illegible]	40'-0"	DS	A242	75	2'-6¾"

COLUMN END	TRUSS DESIGNATION	BEARING ANGLES				WE	DIAGONAL "T" STRUT				VERTICAL "ST" STRUT				END STIFFENER MK. V1			END STIFFENER MK. V3			DOUBLE STRUT			
		MK.	TYPE STEEL	CHORD SIZE	LENGTH		MK	TYPE STEEL	DIA	LENGTH	MK	TYPE STEEL	DIA	LENGTH	TYPE STEEL	DIA	LENGTH	TYPE STEEL	DIA	LENGTH	MK	TYPE STEEL	DIA	LENGTH
	C32T8K-586	8	A242	2"x1½"x.25	2'-3"	6'-1¼"	1	A36	1.09	6'-3⅛"	2	A36	1.09	2'-4⅜"	A36	1.09	4⅜"	A36	1.09	2'-9½"	DS	A242	92	6'-3⅛"

CHECK DIMENSION FOR TRUSS FAB LOCATION OF TRANS. TRUSS				
CL-1	CL-2	CL-3	CL-4	Fs
9'-6½"	22'-10½"	36'-2½"	49'-6½"	5'-2½"

CORE END	TRUSS DESIGNATION	BEARING ANGLES				WE.	DIAGONAL "T" STRUT				VERTICAL "ST" STRUT				END STIFFENER MK. V1			END STIFFENER MK. V2			END STIFFENER MK. V4			WEB "WC"					WEB "WT"				
		MK.	TYPE STEEL	CHORD SIZE	LENGTH		MK.	TYPE STEEL	DIA	LENGTH	MK.	TYPE STEEL	DIA.	LENGTH	TYPE STEEL	DIA.	LENGTH	TYPE STEEL	DIA.	LENGTH	TYPE STEEL	DIA.	LENGTH	MK.	TYPE STEEL	PCS	DIA	LENGTH	MK.	TYPE STEEL	PCS	DIA.	LENGTH
	[illegible]K-586	[illegible]	A242	2"x1½"x.25	1'-0½"	3'-10¼	10	A242	1.14	4'-5¼"	5	A242	1.14	2'-4⅞"	A242	1.14	4⅞"	A242	1.14	7⅞"	—	—	—	—	—	—	—	—	—	—	—	—	—

STEEL TRUSS DETAILS
FOR
WORLD TRADE CENTER - N.Y.C
FOR
THE PORT OF NEW YORK AUTHORITY

FLOOR TRUSS C32T8K 58'-6" OVERALL
WORLD TRADE CENTER TOWER A-B

FABRICATION BY LACLEDE STEEL COMPANY

FABRICATED AT MADISON, ILLINOIS		DESIGN DRAWING NO. 7-AB1-5 7-AB3-2 PLATE	
APPROVED FOR FABRICATION James White FOR P.O.N.Y.A.	DATE 1/29/69	DRAWN BY [illegible] DATE JAN 7, 1969	1
APPROVED FOR FABRICATION BY FOR FABRICATOR	DATE	CHECKED BY T.N. CHURA DATE JAN 7 1969	IN CHARGE OF PROD. DEV.
DETAILED BY: A.G. WEBER		FABRICATION CONT. NO. WTC 221-[illegible]	SHEET NO. [illegible]

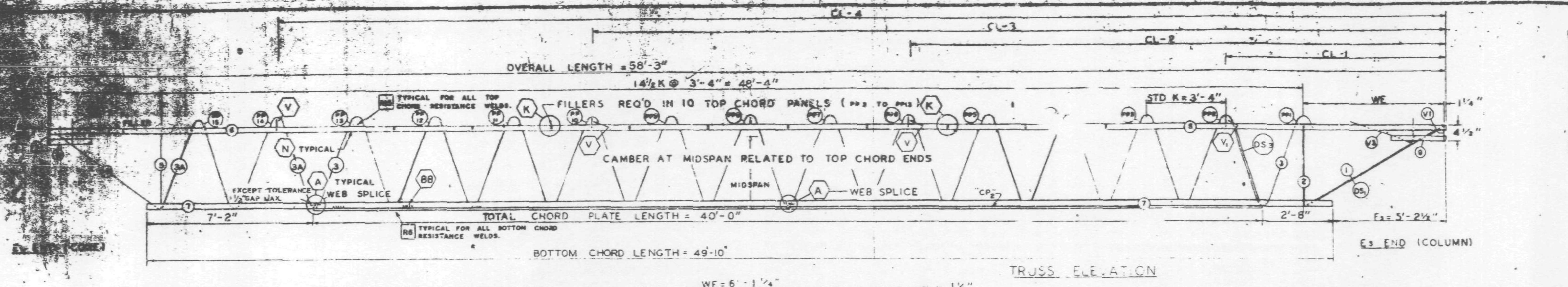

FABRICATION REQUIREMENTS

	DESIGN	TOLERANCE
CAMBER AT MIDSPAN	2"	± 3/8"
DESIGN DEPTH	29"	± 1/4"
PANEL "K"	3'-4"	± 1/4"
OVERALL LENGTH	58'-3"	± 3/8"
WEB DEPTH	31 7/8"	± 1/4"

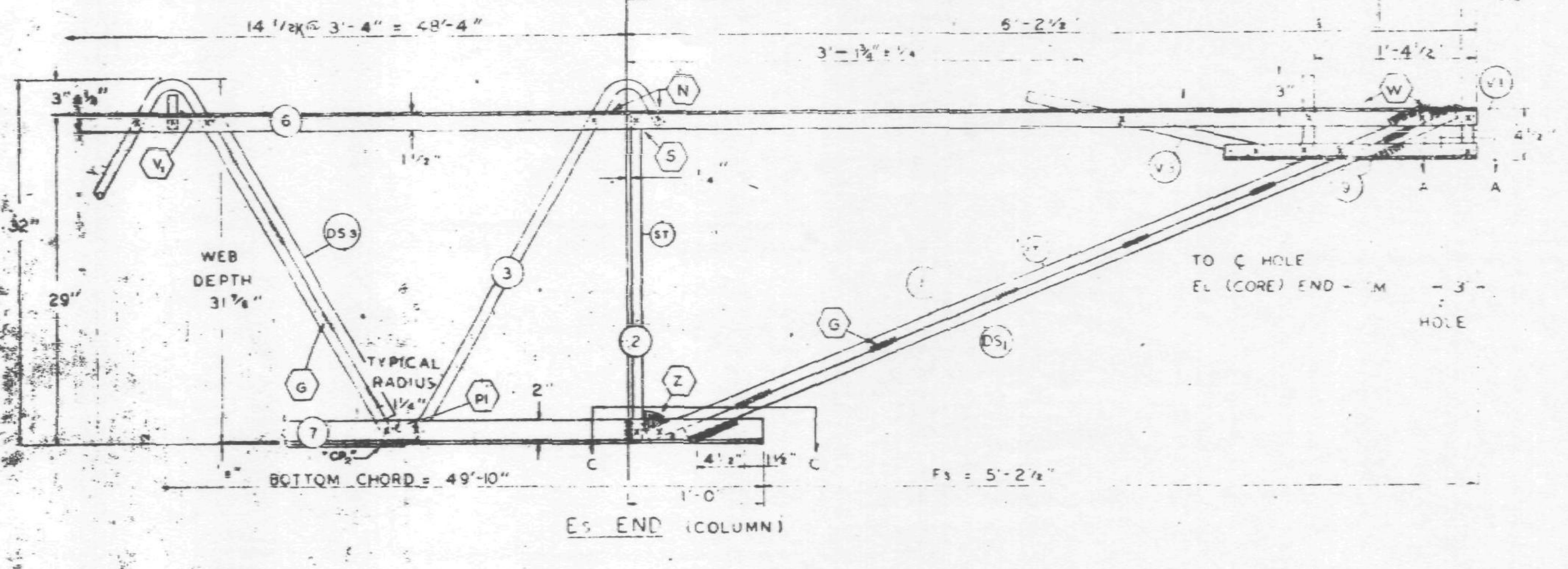

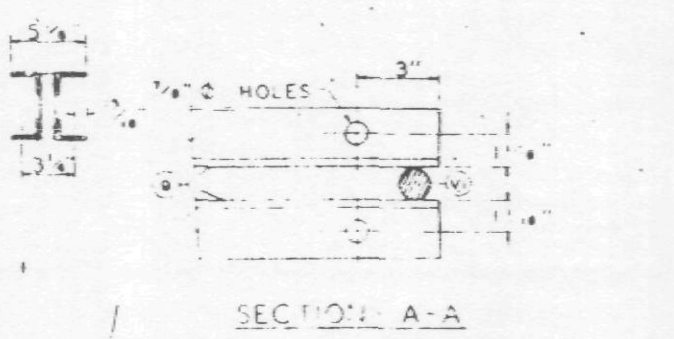

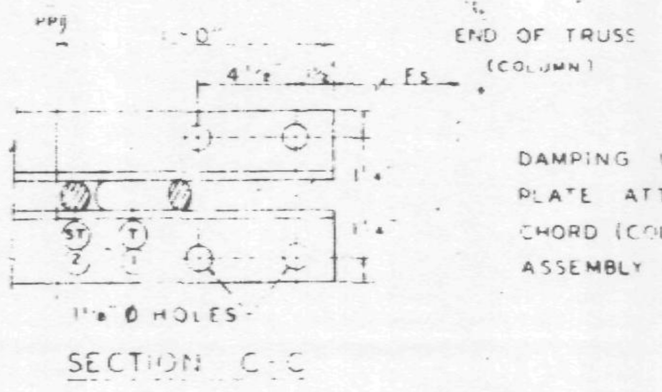

ALL PANEL POINTS RESISTANCE WELDED EXCEPT ARC WELDS INDICATED AT SHADED AREAS AND AT BOTTOM CHORD WEB SPLICES. ALL WELD DETAILS SHOWN ON SHEETS ST290, ST291, ST292, AND ST281.

CHORD PLATE DETAILS SHOWN ON SHEET ST280. SEE SHEET ST295 FOR V1, V2, & V3 DETAILS. LETTERS IN HEXAGON INDICATE WELD DETAIL, i.e., (A). LETTERS AND NUMBERS IN SQUARES INDICATE RESISTANCE WELD STRENGTH IDENTIFIED IN THE QUALITY CONTROL PROGRAM, i.e., [R6].

DAMPING UNIT CONNECTION PLATE ATTACHED TO BOTTOM CHORD (COL END) IN FIELD. ASSEMBLY BY CONTRACT WTC 223.00

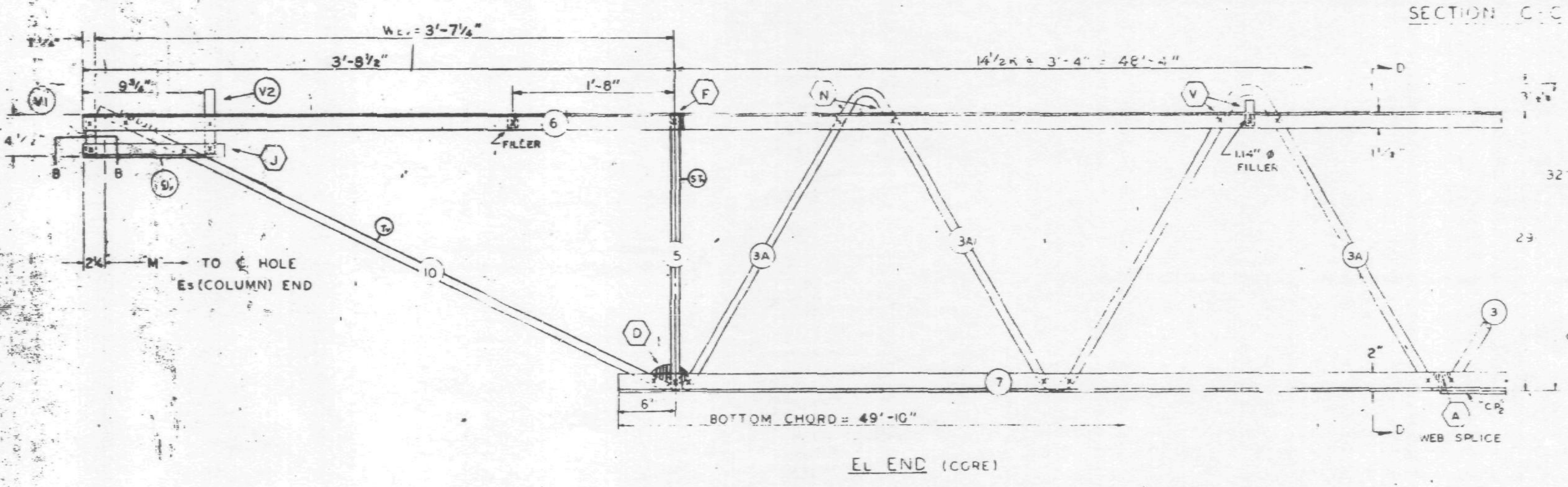

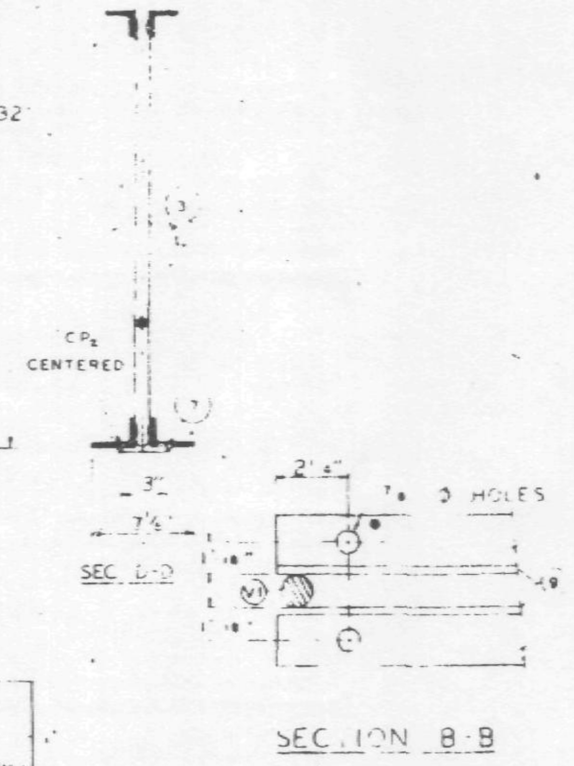

NO.	DATE	REVISION	BY

REF. DRWGS

7-ABI-5	10-15-68
7-ABI-52	2-15-68
7-ABI-53	7-22-68
7-AB4	8-1-68
7-AB3-2	1-3-68
7-AB4-505	10-20-67

PAINT
LACLEDE ELECTRO COAT
RED NO. 10001

TRUSS DESIGNATION		TOP CHORD TWO ANGLES				BOTTOM CHORD TWO ANGLES				MAIN WEB "W"					FILLER		"M" ℄ HOLE	CONNECTION FILLERS			CHORD PLATE				DOUBLE STRUT			
	MK	TYPE STEEL	CHORD SIZE	LENGTH	MK	TYPE STEEL	CHORD SIZE	LENGTH	MK	TYPE STEEL	DIA	LENGTH	NO OF K		NO	DIA		NO	DIA	LENGTH	MK	TYPE STEEL	SIZE	LENGTH	MK	TYPE STEEL	DIA	LENGTH
C32T8M 583	6	A242	2"×1½"×.31	58'-3"	7	A36	3"×2"×.33	49'-10"	3 / 3A	A36 / A242	1.09 / 1.14	78'-3¾ / 12'-5½"	12½@ 3'-4" = 41'-8" / 2 @ 3'-4" = 6'-8"		11	1.09	57'-9¾"	3 / 1	1.09 / 1.14	3" / 3"	CP2	A36	¼×3	40'-0"	DS3	A242	.75	2'-6¾"

COLUMN END	Es END	TRUSS DESIGNATION	BEARING ANGLES				WE	DIAGONAL "T" STRUT				VERTICAL "ST" STRUT				END STIFFENER MK. V1			END STIFFENER MK. V3			DOUBLE STRUT			
			MK	TYPE STEEL	CHORD SIZE	LENGTH		MK	TYPE STEEL	DIA	LENGTH	MK	TYPE STEEL	DIA	LENGTH	TYPE STEEL	DIA	LENGTH	TYPE STEEL	DIA	LENGTH	MK	TYPE STEEL	DIA	LENGTH
		32T8M 583	9	A242	2"×1½"×.25	2'-3"	6'-1¼"	1	A36	1.09	6'-3¼"	2	A36	1.09	2'-4⅝"	A36	1.09	4⅝"	A36	1.09	2'-9"	DS1	A242	.92	6'-3⅛"

CHECK DIMENSION FOR TRUSS FAB. LOCATION OF TRANS. TRUSS

CL-1	CL-2	CL-3	CL-4	Fs
9'-6½"	22'-10½"	36'-2½"	49'-6½"	5'-2¼"

TRUSS DESIGNATION	BEARING ANGLES				WE	DIAGONAL "T" STRUT				VERTICAL "ST" STRUT				END STIFFENER MK. V2			END STIFFENER MK. V4			WEB "WC"					WEB "WT"				
	MK	TYPE STEEL	CHORD SIZE	LENGTH		MK	TYPE STEEL	DIA	LENGTH	MK	TYPE STEEL	DIA	LENGTH	TYPE STEEL	DIA	LENGTH	TYPE STEEL	DIA	LENGTH	MK	TYPE STEEL	PCS	DIA	LENGTH	MK	TYPE STEEL	PCS	DIA	LENGTH
C32T8M 583	[illegible]	A242	2"×[illegible]×.25	1'-0"	3'-7¼"	[illegible]	A242	1.14	4'-2¾"	5	A242	1.14	2'-4⅞"	A242	1.14	[illegible]	A242	[illegible]	[illegible]										

STEEL TRUSS DETAILS
FOR
WORLD TRADE CENTER – N.Y.C.
FOR
THE PORT OF NEW YORK AUTHORITY

FLOOR TRUSS C32T8M 58'-3" OVERALL
WORLD TRADE CENTER TOWER A-B

FABRICATION BY LACLEDE STEEL COMPANY			
FABRICATED AT MADISON, ILLINOIS		DESIGN DRAWING NO. 7-ABI-5, 7-AB3-2	PLATE
APPROVED FOR FABRICATION BY James White FOR PONYA	DATE 4/25/69	DRAWN BY [illegible] DATE APRIL 15, 1969	
APPROVED FOR FABRICATION BY FOR FABRICATOR	DATE	CHECKED BY T.M. CHURA DATE APRIL 15, 1969	IN CHARGE OF PROD. DEV.
DETAILED BY LACLEDE STEEL CO.		FABRICATION CONT. NO. WTC 221	SHEET ST[illegible]

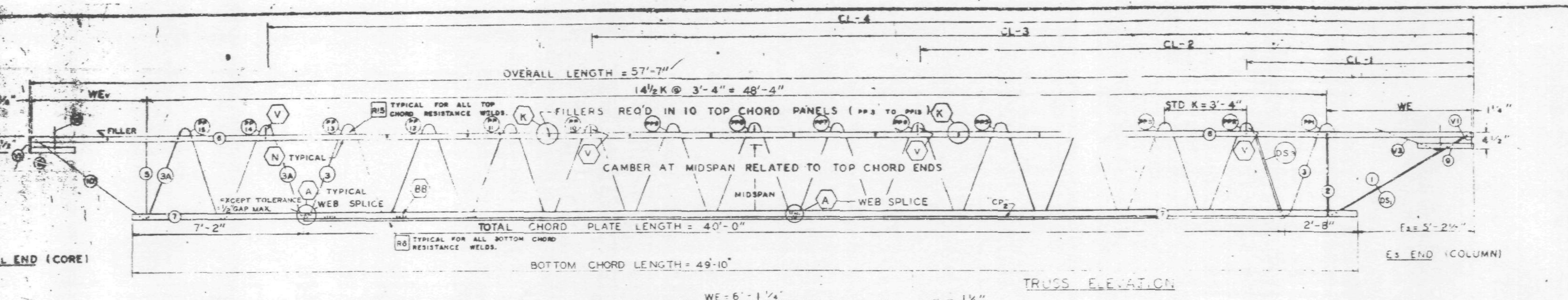

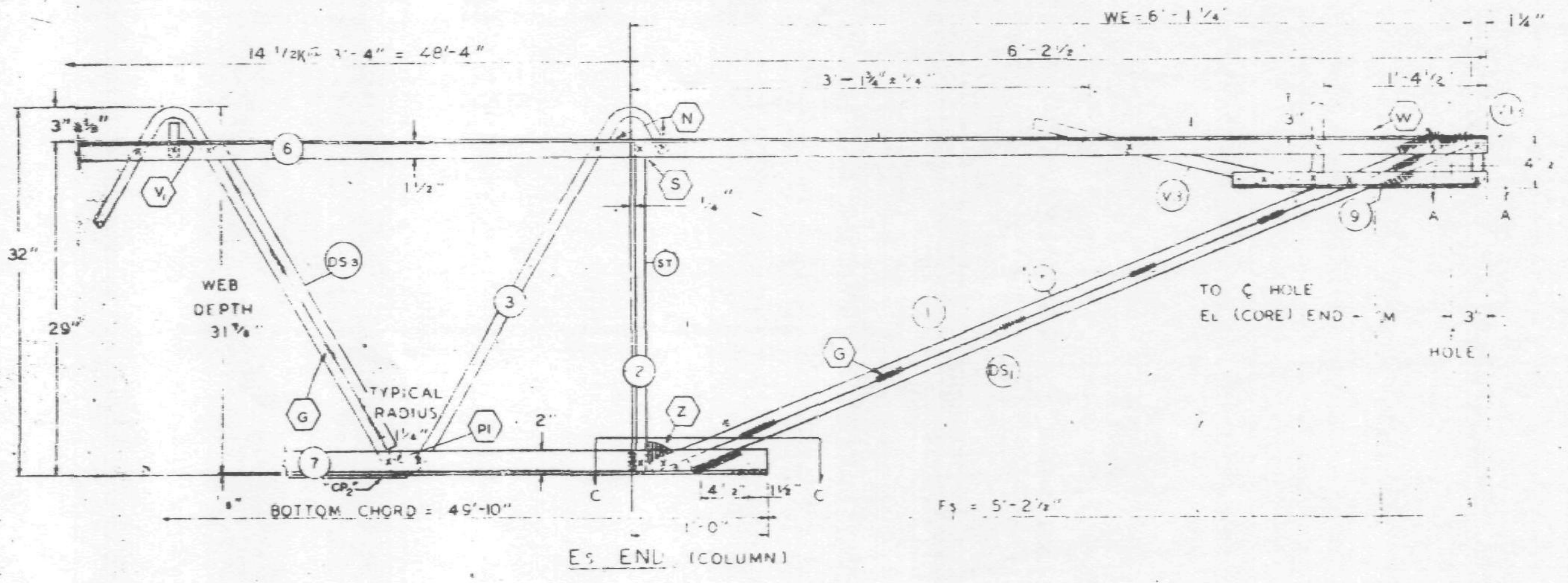

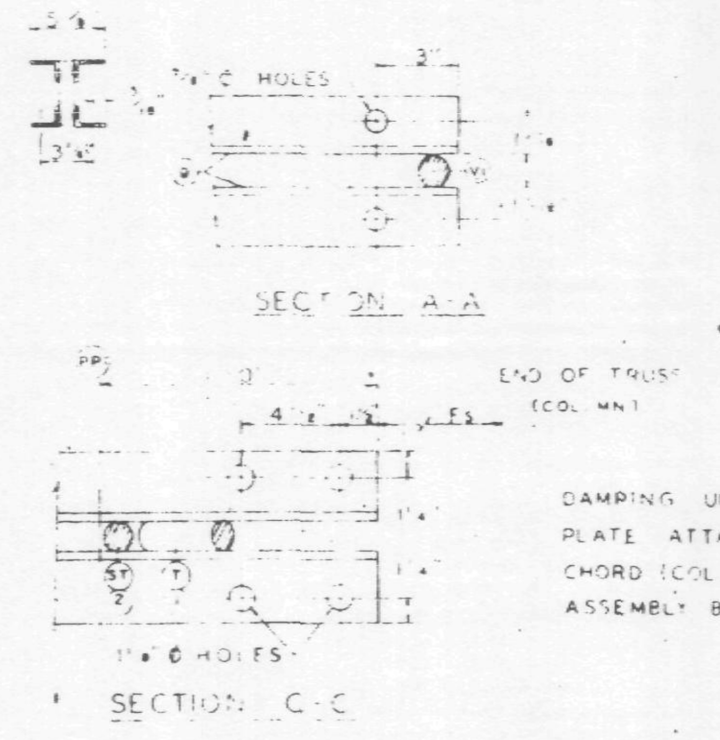

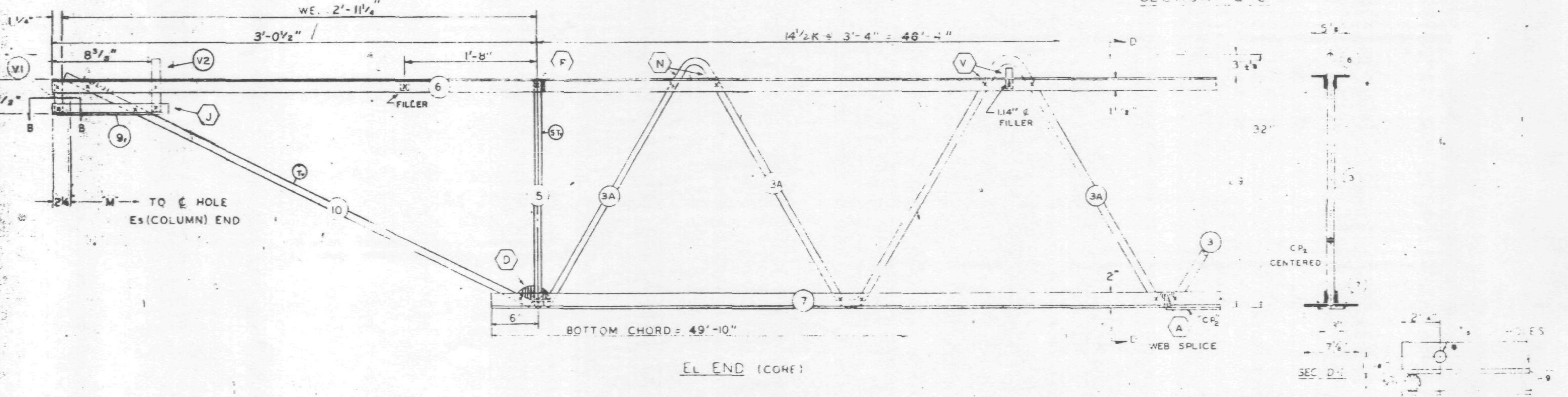

FABRICATION REQUIREMENTS	DESIGN	TOLERANCE
CAMBER AT MIDSPAN	2"	± 3/8"
DESIGN DEPTH	29"	± 1/4"
PANEL "K"	3'-4"	± 1/4"
OVERALL LENGTH	57'-7"	± 3/8"
WEB DEPTH	31 7/8"	± 1/4"

ALL PANEL POINTS RESISTANCE WELDED ARC WELDS INDICATED AT SHADED AREAS AND AT BOTTOM CHORD-WEB SPLICES.
ALL WELD DETAILS SHOWN ON SHEETS ST290, ST291, ST292, AND ST28.

CHORD PLATE DETAILS SHOWN ON SHEET ST280.
SEE SHEET ST295 FOR V1, V2, & V3 DETAILS.
LETTERS IN HEXAGON INDICATE WELD DETAIL, ie., (A).
LETTERS AND NUMBERS IN SQUARES INDICATE RESISTANCE WELD STRENGTH IDENTIFIED IN THE QUALITY CONTROL PROGRAM, ie., [R6].

DAMPING UNIT CONNECTION PLATE ATTACHED TO BOTTOM CHORD (COL END) IN FIELD ASSEMBLY BY CONTRACT WTC 223.00.

NO.	DATE	REVISION	BY

REF DRWGS

7-AB1-5	10-15-68
7-AB-52	2-15-68
7-AB1-53	7-22-68
7-AB4	8-1-68
7-AB3 2	1-3-68
7-ABA-50 5	10-20-67

PAINT
LACLEDE ELECTROCOAT
RED NO 1000.

TRUSS DESIGNATION	TOP CHORD TWO ANGLES MK	TYPE STEEL	CHORD SIZE	LENGTH	BOTTOM CHORD TWO ANGLES MK	TYPE STEEL	CHORD SIZE	LENGTH	MAIN WEB "W" MK	TYPE STEEL	DIA	LENGTH	NO OF K	FILLER NO	DIA	"M" ℄ ℄ HOLE	CONNECTION FILLERS NO	DIA	LENGTH	CHORD PLATE MK	TYPE STEEL	SIZE	LENGTH	DOUBLE STRUT MK	TYPE STEEL	DIA	LENGTH
C32T8P 577	6	A242	2"x1½"x 31	57'-7"	7	A36	3"x 2" x 33	49'-10"	3 / 3A	A36 / A242	1.09 / 1.14	78'-3¾" / 12'-5½"	12½ @ 3'-4" = 41'-8" / 2 @ 3'-4" = 6'-8"	11	1.09	57'-1¾"	3 / 1	1.09 / 1.14	3" / 3"	CP₂	A36	¼x3	40'-0"	DS₃	A242	.75	2'-6¾"

Es END TRUSS DESIGNATION	BEARING ANGLES MK	TYPE STEEL	CHORD SIZE	LENGTH	WE	DIAGONAL "T" STRUT MK	TYPE STEEL	DIA	LENGTH	VERTICAL "ST" STRUT MK	TYPE STEEL	DIA	LENGTH	END STIFFENER MK. V1 TYPE STEEL	DIA	LENGTH	MK. V3 TYPE STEEL	DIA	LENGTH	DOUBLE STRUT MK	TYPE STEEL	DIA	LENGTH
C32T8P 577	9	A242	2"x1½"x 25	2'-3"	6'-1¼"	1	A36	1.09	6'-3⅛"	2	A36	1.09	2'-4⅝"	A36	1.09	4⅝"	A36	1.09	2'-9½"	DS₁	A242	.92	6'-3⅛"

CHECK DIMENSION FOR TRUSS FAB. LOCATION OF TRANS TRUSS CL-1	CL-2	CL-3	CL-4	Fs
9'-6½"	22'-10½"	36'-2½"	49'-6½"	5'-2½"

EL END TRUSS DESIGNATION	BEARING ANGLES MK	TYPE STEEL	CHORD SIZE	LENGTH	WE	DIAGONAL "T" STRUT MK	TYPE STEEL	DIA	LENGTH	VERTICAL "ST" STRUT MK	TYPE STEEL	DIA	LENGTH	END STIFFENER MK. V1 TYPE STEEL	DIA	LENGTH	MK. V2 TYPE STEEL	DIA	LENGTH	MK. V4 TYPE STEEL	DIA	LENGTH	WEB "Wc" MK	TYPE STEEL	PCS	DIA	LENGTH	WEB "WT" MK	TYPE STEEL	PCS	DIA	LENGTH
C32T8P 577	9	A242	2"x1½"x 25	10¼"	4'-7"	10	A242	1.14	3'-8½"	5	A242	1.14	2'-4⅞"	A242	1.14	4"	A242	1.14	7"	—	—	—	—	—	—	—	—	—	—	—	—

STEEL TRUSS DETAILS
FOR
WORLD TRADE CENTER — N.Y.C.
FOR
THE PORT OF NEW YORK AUTHORITY

FLOOR TRUSS C32T8P 57'-7" OVERALL
WORLD TRADE CENTER TOWER A-B

FABRICATION BY LACLEDE STEEL COMPANY

FABRICATED AT MADISON, ILLINOIS		DESIGN DRAWING NO 7-AB1-5 7-AB3-2	PLATE
APPROVED FOR FABRICATION FOR P.O.N.Y.A. James White	DATE 4/25/69	DRAWN BY LWH DATE APRIL 15, 1969	
APPROVED FOR FABRICATION BY FOR FABRICATION	DATE	CHECKED BY T.M. CHURA DATE APRIL 15, 1969	IN CHARGE OF PROD DEV
DETAILED BY A.C. WEBER		FABRICATION CONT NO 221	SHEET NO. ST208P

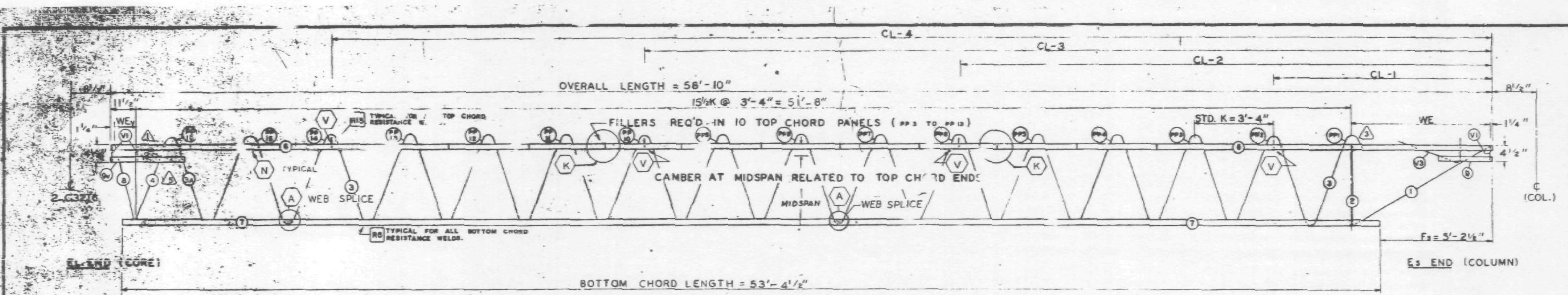

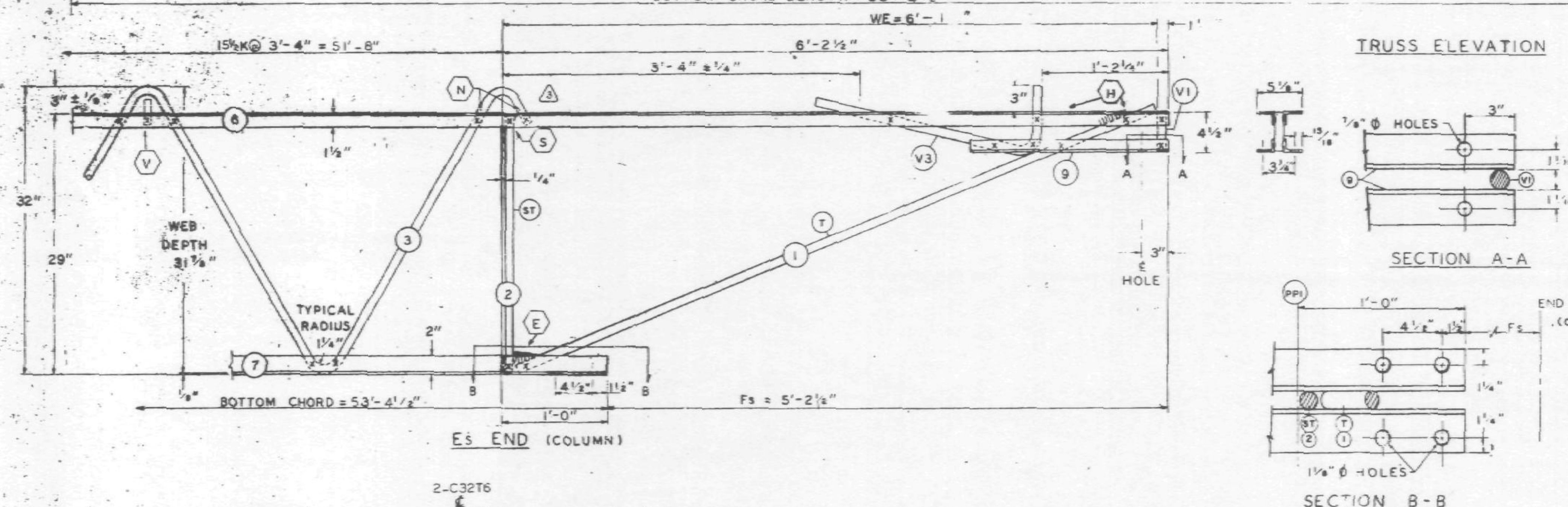

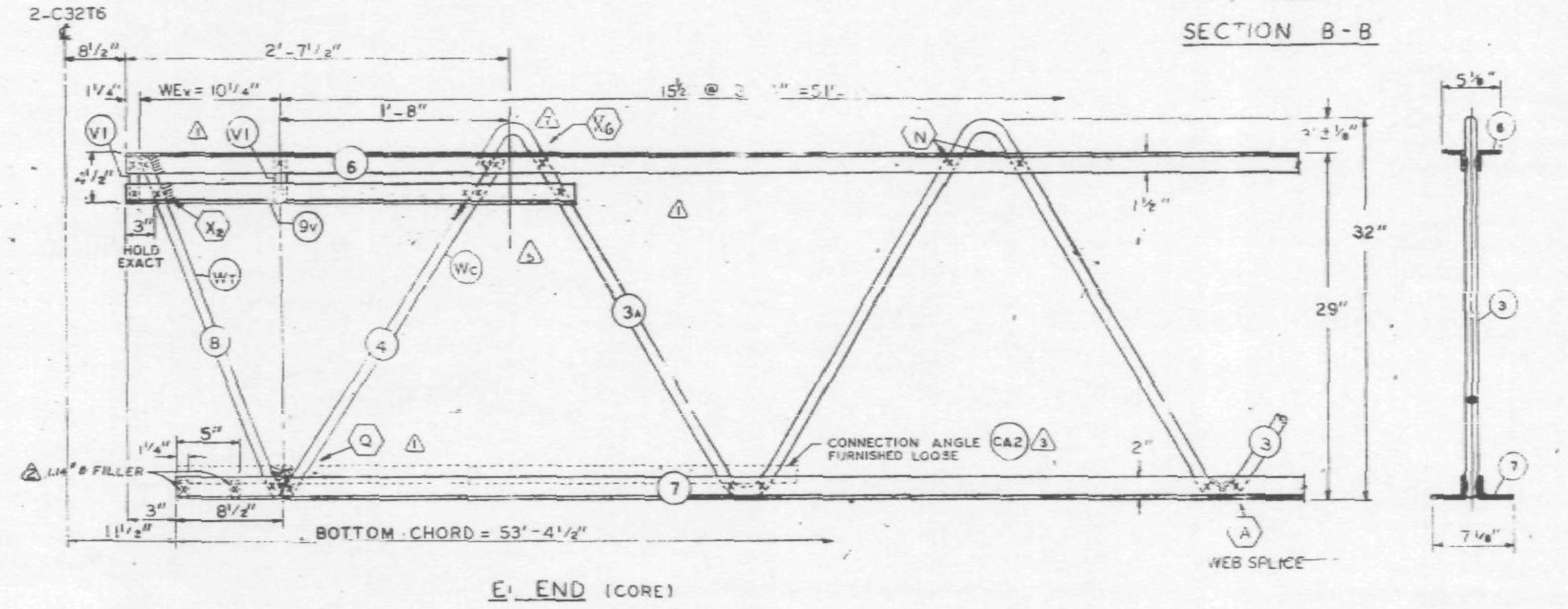

ALL PANEL POINTS RESISTANCE WELDED (X)
ARC WELDS INDICAT[illegible] SHADED AREAS
AND AT BOTTOM CHORD WEB SPLICES (▬)
ALL WELD DETAILS [illegible] ON SHEETS ST290, ST291
AND ST292.
SEE SHEET ST295 FOR V1 & V3 DETAILS.
LETTERS IN HEXAGON INDICATE WELD DETAIL, ie., (A).
LETTERS AND NUMBERS IN SQUARES INDICATE RESISTANCE WELD STRENGTH IDENTIFIED IN THE QUALITY CONTROL PROGRAM, ie., [R6].

DAMPING UNIT CONNECTION
PLATE ATTACHED TO BOTTOM
CHORD (COL END) IN FIELD.
ASSEMBLY BY CONTRACT WTC 223.00.

FABRICATIO[illegible] [illegible]MENTS	DESIGN	TOLERANCE
CAMBER AT MIDSPAN	1 15/16"	± [illegible]
DESIGN DEPTH	29"	± [illegible]/4"
PANEL "K"	3'-4"	± 1/4"
OVERALL LENGTH	58'-10"	± 3/8"
WEB DEPTH	31	± 1/[illegible]"

NO.	DATE	REVISION	BY
7	5-13-70	AS NOTED	G.D.C.
6	5-8-70	AS NOTED	G.D.C.
5	5-1-70	AS NOTED	G.D.C.
4	12-9-68	MAIN WEB LENGTH.	G.D.C.
3	11-19-68	AS NOTED	G.D.C.
2	8-30-68	BOTTOM CHORD FILLER	T.M.
1	7-1-68	AS NOTED	T.M.

△3 REF. DRWG.

7-AB1-7	7-22-68
7-AB1-52	2-15-6[illegible]
7-AB4-50	8-1-6[illegible]
7-AB3-2	1-3-6[illegible]
7-AB4-50.5	10-20-6[illegible]
7-AB1-53	10-15-6[illegible]

PAINT
LACLEDE ELECTROCOAT
RED NO. 10001

STEEL TRUSS DETAILS
FOR
WORLD TRADE CENTER - N.Y.C.
FOR
THE PORT OF NEW YORK AUTHORITY

FLOOR TRUSS C32T9 · 58'-10" OVERALL
WORLD TRADE CENTER TOWERS A-B

FABRICATION BY: LACLEDE STEEL COMPANY
FABRICATED AT: MADISON, ILLINOIS
DESIGN DRAWING NO. 7-AB1-7 7-AB3-2 PLATE
APPROVED FOR FABRICATION BY: ______ FOR P.O.N.Y.A. DATE 5/12/70
DRAWN BY: [illegible] DATE: MAY 27, 1968
APPROVED FOR FABRICATION BY: ______ FOR FABRICATOR DATE.
CHECKED BY: [illegible] DATE: MAY 27, 1968
IN CHARGE OF [illegible]
DETAILED BY: A.C. [illegible]
FABRICATOR [illegible] SHEET NO. W.T.C. 221-[illegible] ST20[illegible]

TRUSS DESIGNATION	TOP CHORD TWO ANGLES MK.	TYPE STEEL	CHORD SIZE	LENGTH	BOTTOM CHORD TWO ANGLES MK.	TYPE STEEL	CHORD SIZE	LENGTH	MAIN WEB "W" △5 MK.	TYPE STEEL	DIA.	LENGTH △4	NO. OF K	FILLER △2 NO	DIA.	"M" C/C HOLES	CONNECTION FILLER NO.	DIA.	LENGTH	CHORD PLATE MK	TYPE STEEL	SIZE	LENGTH
C32T9-5810	6	A242	2"x1½"x.31"	58'-10"	7	A36	3"x2"x.33"	53'-4½"	3 3A	A36 A242	1.09 1.14	84'-6½" [illegible]	13½K @ 3'-4" = 45'-0" 1½K @ 3'-4" = 5'-0"	13 2	1.09 1.14	—	4	1.09	3"	—	—	—	—

COLUMN END

Es END TRUSS DESIGNATION	BEARING ANGLES MK.	TYPE STEEL	CHORD SIZE	LENGTH	WE	DIAGONAL "T" STRUT MK	TYPE STEEL	DIA	LENGTH	VERTICAL "ST" STRUT MK.	TYPE STEEL	DIA.	LENGTH △3	END STIFFENER MK. V1 TYPE STEEL	DIA.	LENGTH	END STIFFENER MK. V3 TYPE STEEL	DIA.	LENGTH	DOUBLE STRUT MK.	TYPE STEEL	DIA.	LENGTH
C32T9-5810	9	A242	2"x1½"x.25"	1'-10"	6'-1¼"	1	A242	1.14"	6'-5"	2	A36	1.09"	2'-4⅝"	A242	1.14"	4⅝"	A242	1.14"	2'-9½"	—	—	—	—

CORE END

E1 END TRUSS DESIGNATION	BEARING ANGLES MK.	TYPE STEEL	CHORD SIZE	LENGTH	WEv	VERTICAL "STv" STRUT MK.	TYPE STEEL	DIA	LENGTH	VERTICAL "ST" STRUT MK.	TYPE STEEL	DIA.	LENGTH	END STIFFENER TYPE STEEL	DIA.	LENGTH	END STIFFENER MK. V2 TYPE STEEL	DIA.	LENGTH	END STIFFENER MK. V4 TYPE STEEL	DIA.	LENGTH	WEB "Wc" △5 MK	TYPE STEEL	PCS	DIA	LENGTH	WEB "WT" MK.	TYPE STEEL	PCS	DIA.	LENGTH	CONNECTION ANGLES (FURNISHED LOOSE) NO.	△3 MK.	TYPE STEEL	ANGLE SIZE	LENGTH
[illegible]-5810	9	A242	2"x1½"x.31"	3'-2"	10¼"	—	—	—	—	—	—	—	—	A242	1.14"	4⅝"	—	—	—	—	—	—	4	A242	1	1.14	2'-10"	8	A242	[illegible]	1.14"	2'-5¾"	2	CA2	A242	2"x1½"x37"	4'-4"

CHECK DIMENSION FOR TRUSS FAB.

LOCATION OF TRANS. TRUSS CL-1	CL-2	CL-3	CL-4	Fs
9'-6½"	22'-10½"	36'-2½"	49'-6½"	5'-2½"

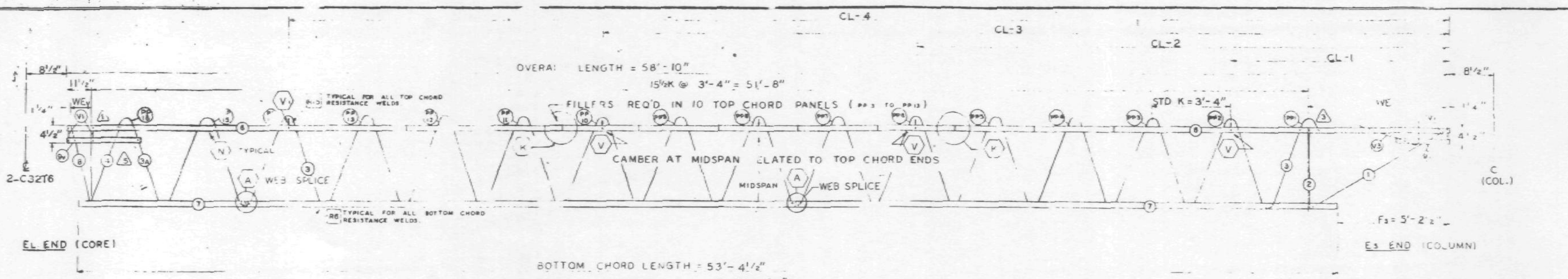

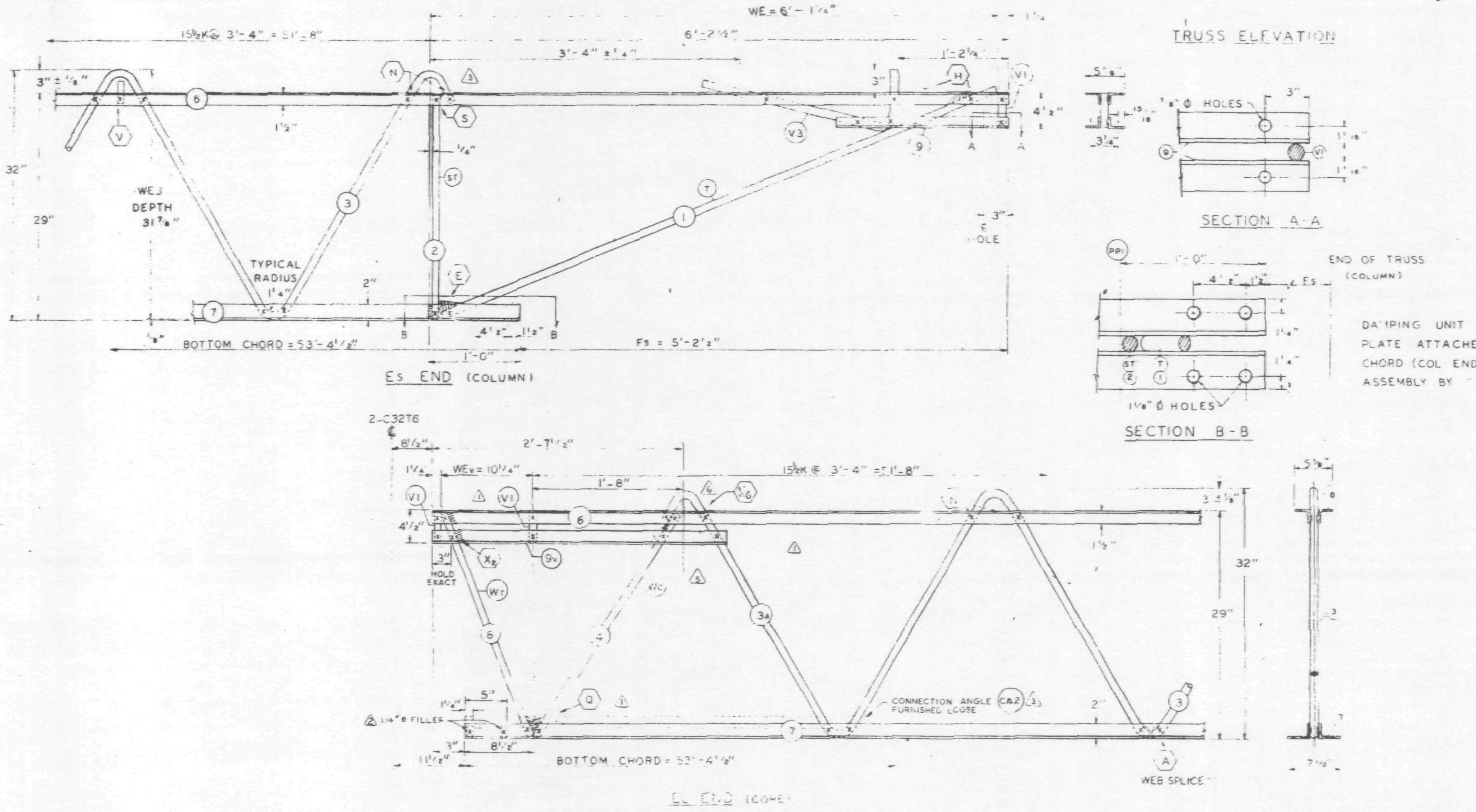

DAMPING UNIT CONNECTION PLATE ATTACHED TO BOTTOM CHORD (COL END) IN FIELD ASSEMBLY BY

FABRICATION REQUIRMENTS	DESIGN	TOLERANCE
CAMBER AT MIDSPAN	1 15/16"	± 3/8"
DESIGN DEPTH	29"	± 1/4"
PANEL "K"	3'-	± 1/4"
OVERALL LENGTH	58'	± 3/8"
WEB DEPTH	31 7/8"	± 1/4"

ALL PANEL POINTS RESISTANCE WELDED (•)
ARC WELDS INDICATED AT SHADED
AND AT BOTTOM CHORD WEB SPLICE
ALL WELD DETAILS SHOWN ON SH ST291
AND ST292.
SEE SHEET ST295 FOR V1 & V3 DETAILS.
LETTERS IN HEXAGON INDICATE WELD DETAIL, ie., (A).
LETTERS AND NUMBERS IN SQUARES INDICATE RESISTANCE WELD STRENGTH IDENTIFIED IN THE QUALITY CONTROL PROGRAM, ie., [R6].

NO.	DATE	REVISION	BY
6			
5	5- -70	AS NOTED	G.D.C.
4	12-9-68	MAIN WEB LENGTH	G.D.C.
3	11-19-68	AS NOTED	G.D.C.
2	8-30-68	BOTTOM CHORD FILLER	T.M.C.
1	7-1-68	AS NOTED	T.M.C.

3 REF. DRWG.

7-AB1-7	7-22-
7-AB1-52	2-15-
7-AB4-50	8-1-68
7-AB3-2	
7-AB4-50.5	10-20-
7-AB1-53	10-15

PAINT
LACLEDE ELECTROCOAT
REG. NO. 1000

TRUSS DESIGNATION	TOP CHORD TWO ANGLES MK.	TYPE STEEL	CHORD SIZE	LENGTH	BOTTOM CHORD TWO ANGLES MK	TYPE STEEL	CHORD SIZE	LENGTH	MAIN WEB "W" (5) MK	TYPE STEEL	DIA	LENGTH (4)	NO OF K	FILLER (2) NO	DIA	"M" ℄ HOLES	CONNECTION FILLER NO.	DIA.	LENGTH	CHORD PLATE MK	TYPE STEEL	SIZE	LENGTH
C32T9-5810	6	A242	2"x1½"x.31"	58'-10"	7	A36	3"x2"x.33"	53'-4½"	3	A36	1.09	84'-6½"	13½K @ 3'-4" = 45'-0"	15	1.09	—	4	1.09	3"	—	—	—	—
									3A	A242	1.14		1½K @ 3'-4" = 5'-0"	2	1.14								

COLUMN END	Es END TRUSS DESIGNATION	BEARING ANGLES MK	TYPE STEEL	CHORD SIZE	LENGTH	WE	DIAGONAL "T" STRUT MK	TYPE STEEL	DIA	LENGTH	VERTICAL "ST" STRUT MK	TYPE STEEL	DIA.	LENGTH (3)	END STIFFENER MK. V1 TYPE STEEL	DIA.	LENGTH	MK V3 TYPE STEEL	DIA.	LENGTH	DOUBLE STRUT MK.	TYPE STEEL	DIA	LENGTH
	C32T9-5810	9	A242	2"x1½"x.25"	1'-10"	6'-1¼"	1	A242	1.14"	6'-5"	2	A36	1.09"	2'-4⅜"	A242	1.14"	4⅜"	A242	1.14"	2'-9½"	—	—	—	—

CHECK DIMENSION FOR TRUSS FAB.

LOCATION OF TRANS. TRUSS				
CL-1	CL-2	CL-3	CL-4	Fs
9'-6½"	22'-10½"	36'-2½"	49'-6½"	5'-2½"

CORE END	EL END TRUSS DESIGNATION	BEARING ANGLES MK.	TYPE STEEL	CHORD SIZE	LENGTH	WEv	VERTICAL "STv" STRUT MK.	TYPE STEEL	DIA	LENGTH	VERTICAL "ST" STRUT MK.	TYPE STEEL	DIA.	LENGTH	END STIFFENER MK. V1 TYPE STEEL	DIA.	LENGTH (2 REQ'D)	MK. V2 TYPE STEEL	LENGTH	MK. V4 TYPE STEEL	DIA.	LENGTH	WEB "WC" (5) MK	TYPE STEEL	PCS	DIA	LENGTH	WEB "WT" MK	TYPE STEEL	PCS	DIA.	LENGTH	CONNECTION ANGLES (FURNISHED LOOSE) NO.	(3) MK.	TYPE STEEL	ANGLE SIZE	LENGTH
	C32T9-5810	9v	A242	2"x1½"x.31"	3'-2"	10¼"	—	—	—	—	—	—	—	—	A242	1.14"	4⅜"	—	—	—	—	—	4	A242	1	1.14	2'-10"	8	A242	1	1.14"	2'-5¾"	2	CA3	A242	2"x1½"x.37"	4'-4"

STEEL TRUSS DETAILS
FOR
WORLD TRADE CENTER - N.Y.C.
FOR
THE PORT OF NEW YORK AUTHORITY

FLOOR TRUSS C32T9 58'-10" OVERALL
WORLD TRADE CENTER TOWERS A-B

FABRICATION BY LACLEDE STEEL COMPANY

FABRICATED AT MADISON, ILLINOIS		DESIGN DRAWING NO. 7-AB1-7 7-AB3-2	PLATE
APPROVED FOR FABRICATION BY FOR P.O.N.Y.A.	DATE	DRAWN BY: DATE: MAY 27, 1968	
APPROVED FOR FABRICATION BY FOR FABRICATOR	DATE	CHECKED BY: J.J. PAUL DATE: MAY 27, 1968	IN CHARGE OF PROD. DEV.
DETAILED BY: A.C. WEBER		FABRICATION CONT. NO. W.T.C. 221	SHEET NO. ST209

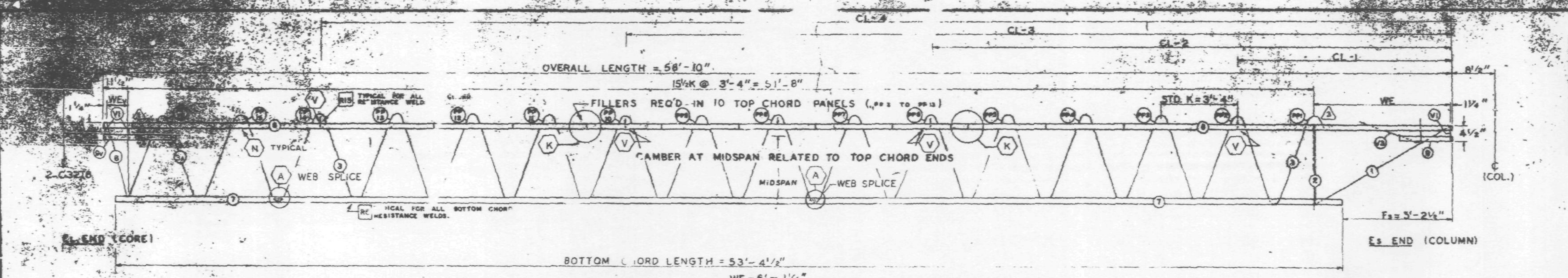

TRUSS ELEVATION

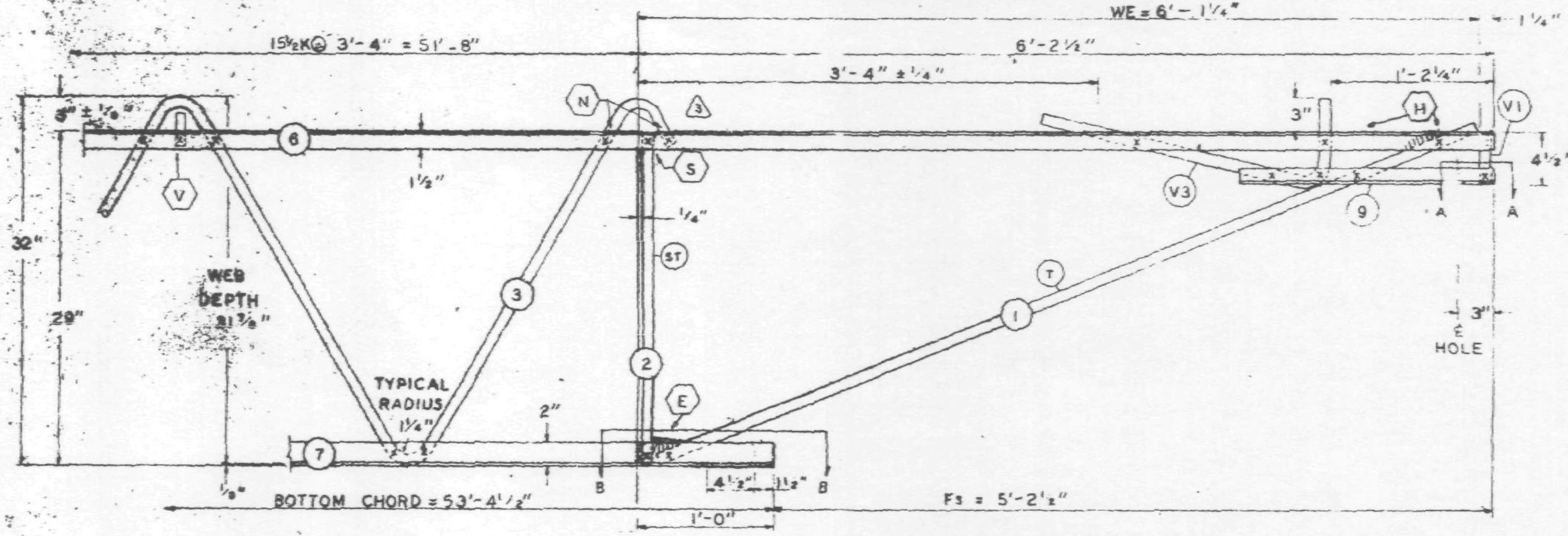

ES END (COLUMN)

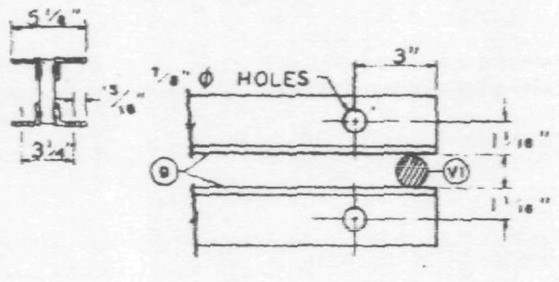

SECTION A-A

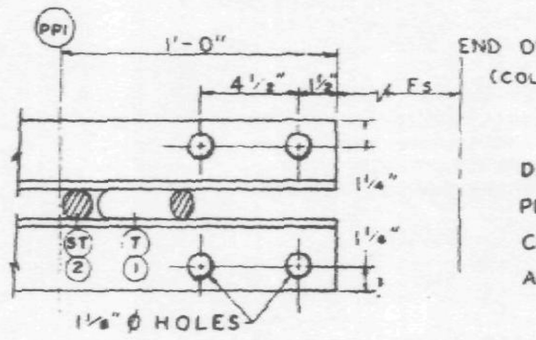

SECTION B-B

DAMPING UNIT CONNECTION PLATE ATTACHED TO BOTTOM CHORD (COL END) IN FIELD. ASSEMBLY BY CONTRACT WTC 223.00.

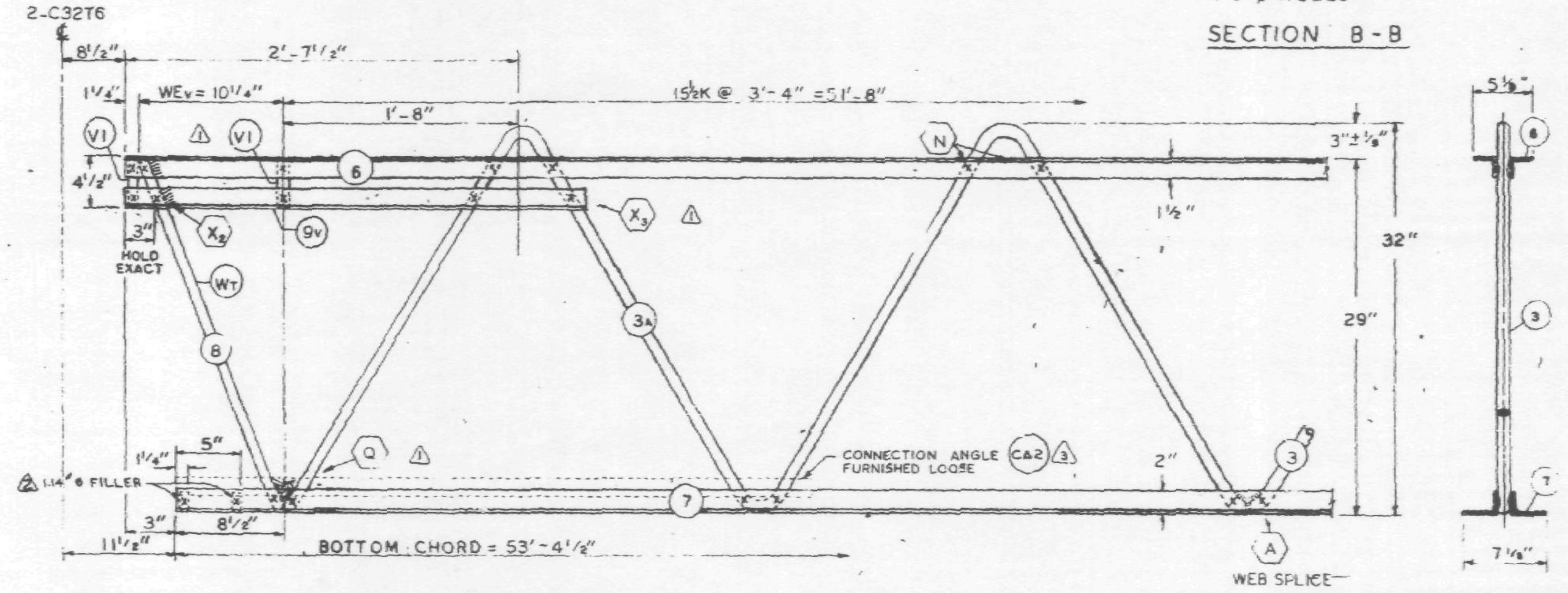

EL END (CORE)

FABRICATION REQUIREMENTS	DESIGN	TOLS.
CAMBER AT MIDSPAN	1 15/16"	± 3/8"
DESIGN DEPTH	29"	± 1/4"
PANEL "K"	[illegible]	± 1/4"
OVERALL LENGTH	58'-10"	± 3/8"
WEB DEPTH	31 7/8"	± 1/4"

ALL PANEL POINTS RESISTANCE WELDED (x)
ARC WELDS INDICATED AT SHADED AREAS AND AT BOTTOM CHORD WEB SPLICES (▬)
ALL WELD DETAILS SHOWN ON SHEETS ST290, ST291 AND ST292.
SEE SHEET ST295 FOR V1 & V3 DETAILS.
LETTERS IN HEXAGON INDICATE WELD DETAIL, ie., (A).
LETTERS AND NUMBERS IN SQUARES INDICATE RESISTANCE WELD STRENGTH IDENTIFIED IN THE QUALITY CONTROL PROGRAM, ie., [R6].

NO.	DATE	REVISION	BY
4	12-9-68	MAIN WEB LENGTH.	G.D.C.
3	11-19-68	AS NOTED	G.D.C.
2	8-30-68	BOTTOM CHORD FILLER	T.M.C.
1	7-1-68	AS NOTED	T.M.C.

3 REF. DRWG.

7-AB1-7	7-22-68
7-AB1-52	2-15-68
7-AB4-50	8-1-68
7-AB3-2	1-3-68
7-AB4-50.5	10-20-67
7-AB1-53	10-18-68

PAINT

LACLEDE ELECTROCOAT
RED NO. 10001

TRUSS DESIGNATION	TOP CHORD TWO ANGLES MK.	TYPE STEEL	CHORD SIZE	LENGTH	BOTTOM CHORD TWO ANGLES MK.	TYPE STEEL	CHORD SIZE	LENGTH	MAIN WEB "W" MK.	TYPE STEEL	DIA	LENGTH (4)	NO. OF K	FILLER (2) NO	DIA	"M" C/C HOLES	CONNECTION FILLER NO.	DIA.	LENGTH	CHORD PLATE MK	TYPE STEEL	SIZE	LENGTH
C32T9-5810	6	A242	2"x1½"x.31"	58'-10"	7	A36	3"x2"x.33"	53'-4½"	3 3A	A36 A242	1.09 1.14	84'-6½" 12'-5½"	13½K @ 3'-4" = 45'-0" 2K @ 3'-4" = 6'-8"	10 2	1.09 1.14	—	4	1.09	3"	—	—	—	—

COLUMN END

TRUSS DESIGNATION	BEARING ANGLES MK.	TYPE STEEL	CHORD SIZE	LENGTH	WE	DIAGONAL "T" STRUT MK	TYPE STEEL	DIA	LENGTH	VERTICAL "ST" STRUT MK.	TYPE STEEL	DIA.	LENGTH (3)	END STIFFENER MK. V1 TYPE STEEL	DIA	LENGTH	MK. V3 TYPE STEEL	DIA.	LENGTH	DOUBLE STRUT MK.	TYPE STEEL	DIA	LENGTH
C32T9-5810	9	A242	2"x1½"x.25"	1'-10"	6'-1¼"	1	A242	1.14"	6'-5"	2	A36	1.09"	2'-4⅜"	A242	1.14"	4⅜"	A242	1.14"	2'-9½"	—	—	—	—

CHECK DIMENSION FOR TRUSS FAB.

LOCATION OF TRANS. TRUSS CL-1	CL-2	CL-3	CL-4	Fs
9'-6½"	22'-10½"	36'-2½"	49'-6½"	5'-2½"

CORE END

TRUSS DESIGNATION	BEARING ANGLES MK.	TYPE STEEL	CHORD SIZE	LENGTH	WEv	VERTICAL "STv" STRUT MK.	TYPE STEEL	DIA	LENGTH	VERTICAL "ST" STRUT MK.	TYPE STEEL	DIA.	LENGTH	END STIFFENER MK. V1 TYPE STEEL	DIA.	LENGTH	MK. [illegible] TYPE STEEL	DIA.	LENGTH	MK. V4 TYPE STEEL	DIA.	LENGTH	WEB "Wc" MK	TYPE STEEL	PCS	DIA	LENGTH	WEB "WT" MK.	TYPE STEEL	PCS	DIA.	LENGTH	CONNECTION ANGLES (FURNISHED LOOSE) NO.	MK. (3)	TYPE STEEL	ANGLE SIZE	LENGTH
C32T9-5810	9v	A242	2"x1½"x.31"	3'-2"	10¼"	—	—	—	—	—	—	—	—	A242	1.14"	4⅜"	—	—	—	—	—	—	—	—	—	—	—	8	A242	1	1.14"	2'-5¾"	2	CA2	A242	2"x1½"x37"	4'-4"

STEEL TRUSS DETAILS
FOR
WORLD TRADE CENTER - N.Y.C.
FOR
THE PORT OF NEW YORK AUTHORITY

FLOOR TRUSS C32T9 · 58'-10" OVERALL
WORLD TRADE CENTER TOWERS A-B

FABRICATION BY: LACLEDE STEEL COMPANY

FABRICATED AT: MADISON, ILLINOIS
DESIGN DRAWING NO. 7-AB1-7 7-AB3-2 PLATE
APPROVED FOR FABRICATION BY James White FOR P.O.N.Y.A. DATE 12/12/68
DRAWN BY: [illegible] DATE: MAY 27, 1968
APPROVED FOR FABRICATION BY ____ FOR FABRICATOR DATE.
CHECKED BY: J.R. [illegible] DATE: MAY 27, 1968
IN CHARGE OF PROD. DEV.
LACLEDE STEEL CO. DETAILED BY: [illegible]
FABRICATION CONT. NO. W.T.C. 221
SHEET NO. ST209

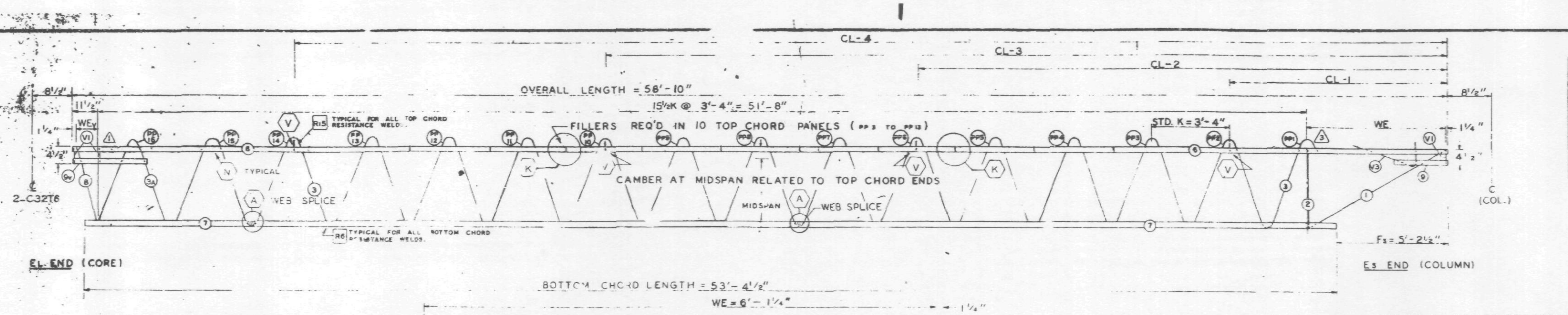

EL END (CORE)

Es END (COLUMN)

TRUSS ELEVATION

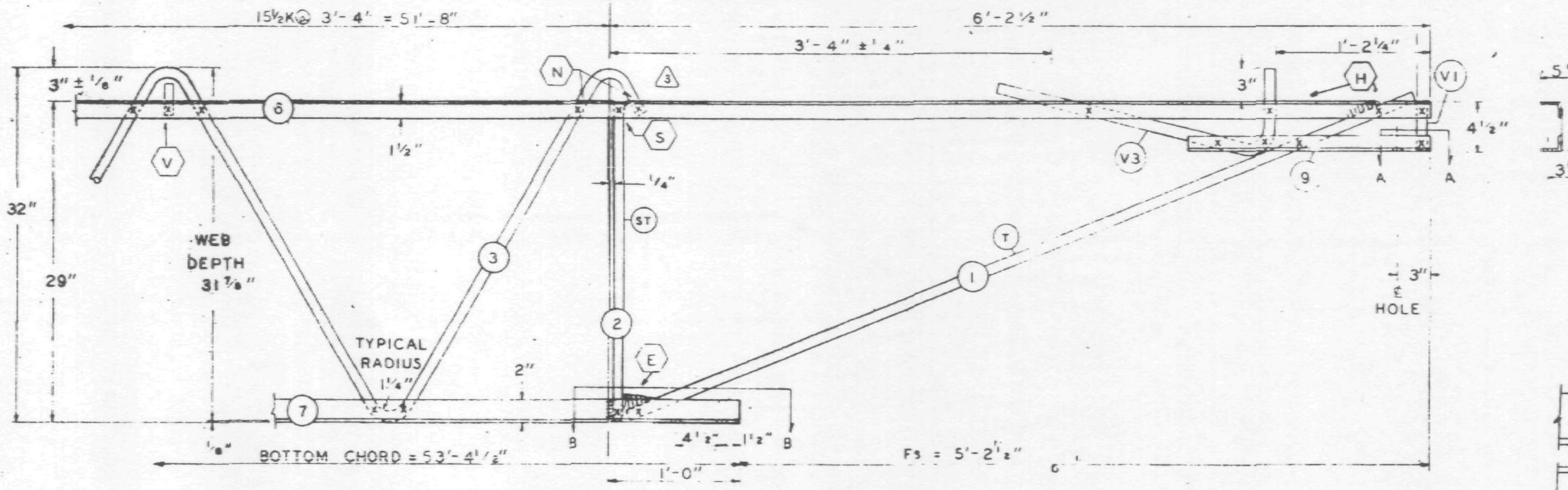

Es END (COLUMN)

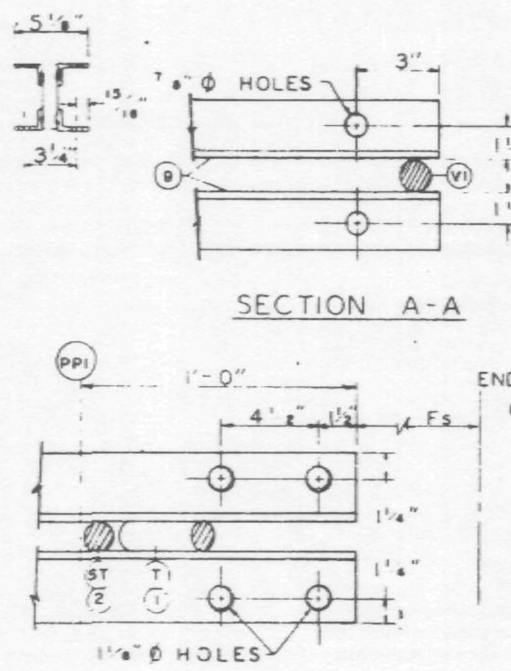

SECTION A-A

SECTION B-B

DAMPING UNIT CONNECTION PLATE ATTACHED TO BOTTOM CHORD (COL END) IN FIELD. ASSEMBLY BY CONTRACT WTC 223.00.

ALL PANEL POINTS RESISTANCE WELDED (X)
ARC WELDS INDICATED AT SHADED AREAS AND AT BOTTOM CHORD WEB SPLICES (▬)
ALL WELD DETAILS SHOWN ON SHEETS ST290, ST291 AND ST292.
SEE SHEET ST295 FOR V1 & V3 DETAILS.
LETTERS IN HEXAGON INDICATE WELD DETAIL, ie., ⟨A⟩.
LETTERS AND NUMBERS IN SQUARES INDICATE RESISTANCE WELD STRENGTH IDENTIFIED IN THE QUALITY CONTROL PROGRAM, ie., [R6].

FABRICATION REQUIREMENTS	DESIGN	TOLERANCE
CAMBER AT MIDSPAN	1 15/16"	± 1/8"
DESIGN DEPTH	29"	± 1/4"
PANEL "K"	3'-	± 1/4"
OVERALL LENGTH	[illegible]	± 3/[illegible]
WEB DEPTH	31 7/8"	± 1/[illegible]

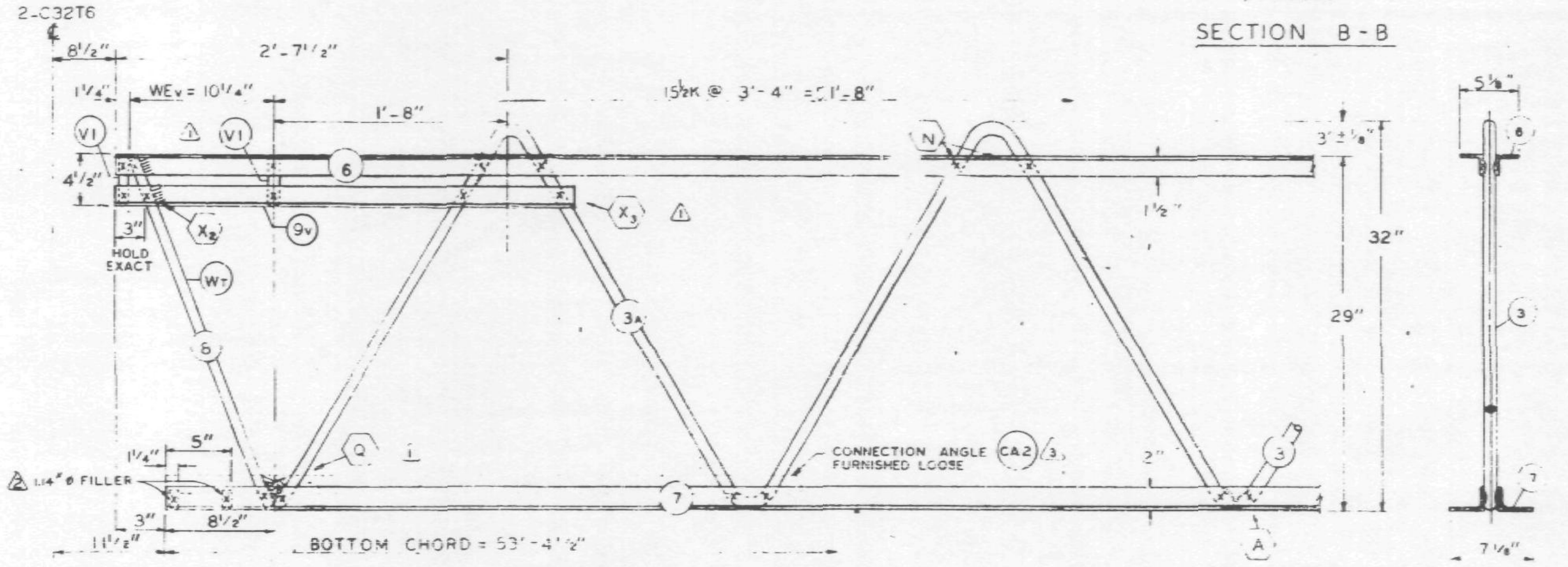

EL END (CORE)

NO.	DATE	REVISION	BY
3	11-19-68	AS NOTED	G.T.C.
2	8-30-68	BOTTOM CHORD FILLER	T.M.C.
1	7-1-68	AS NOTED	T.M.C.

3 REF. DRWG.

7-AB1-7	7-22-68
7-AB1-52	2-15-68
7-AB4-50	8-1-68
7-AB3-2	1-3-68
7-AB4-50.5	10-20-67
7-AB1-53	10-15-68

PAINT

LACLEDE ELECTROCOAT
RED NO. 10001

TRUSS DESIGNATION	TOP CHORD TWO ANGLES				BOTTOM CHORD TWO ANGLES				MAIN WEB "W"					FILLER		"M" C-C HOLES	CONNECTION FILLER			CHORD PLATE			
	MK	TYPE STEEL	CHORD SIZE	LENGTH	MK	TYPE STEEL	CHORD SIZE	LENGTH	MK	TYPE STEEL	DIA	LENGTH	NO OF K	NO	DIA		NO.	DIA.	LENGTH	MK	TYPE STEEL	SIZE	LENGTH
C32T9-5810	6	A242	2"x1½"x.31"	58'-10"	7	A36	3"x2"x.33"	53'-4½"	3 / 3A	A36 / A242	1.09 / 1.14	88'-6½" / 12'-5½"	13½K @ 3'-4" = 45'-0" / 2K @ 3'-4" = 6'-8"	12 / 2	1.09 / 1.14	—	4	1.09	3"	–	—	—	—

COLUMN END

Es END TRUSS DESIGNATION	BEARING ANGLES				WE	DIAGONAL "T" STRUT				VERTICAL "ST" STRUT				END STIFFENER MK V1			END STIFFENER MK V3			DOUBLE STRUT			
	MK	TYPE STEEL	CHORD SIZE	LENGTH		MK	TYPE STEEL	DIA	LENGTH	MK	TYPE STEEL	DIA	LENGTH	TYPE STEEL	DIA	LENGTH	TYPE STEEL	DIA	LENGTH	MK	TYPE STEEL	DIA	LENGTH
C32T9-5810	9	A242	2"x1½"x.25"	1'-10"	6'-1¼"	1	A242	1.14"	6'-5"	2	A36	1.09"	2'-4⅞"	A242	1.14"	4⅜"	A	1.14"	2'-9½"	–	—	—	—

CHECK DIMENSION FOR TRUSS FAB.

LOCATION OF TRANS TRUSS				
CL-1	CL-2	CL-3	CL-4	Fs
9'-6½"	22'-10½"	36'-2½"	49'-6½"	5'-2½"

CORE END

EL END TRUSS DESIGNATION	BEARING ANGLES				WEv	VERTICAL "STv" STRUT				VERTICAL "ST" STRUT				END STIFFENER MK V1			MK V2			MK V4			WEB "Wc"					WEB "WT"					CONNECTION ANGLES (FURNISHED LOOSE)				
	MK	TYPE STEEL	CHORD SIZE	LENGTH		MK	TYPE STEEL	DIA	LENGTH	MK	TYPE STEEL	DIA.	LENGTH	TYPE STEEL	DIA.	LENGTH (2 REQ'D)	TYPE STEEL	DIA.	LENGTH	TYPE STEEL	DIA.	LENGTH	MK	TYPE STEEL	PCS	DIA	LENGTH	MK	TYPE STEEL	PCS	DIA.	LENGTH	NO.	MK.	TYPE STEEL	ANGLE SIZE	LENGTH
C32T9-5810	9v	A242	2"x1½"x.31"	3'-2"	10¼"	–	—	—	—	–	—	—	—	A242	1.14"	4⅜"	—	—	—	—	—	—	–	—	—	—	—	8	A242	1	1.14"	2'-5¾"	2	CA2	A242	2"x1½"x37"	4'-4"

STEEL TRUSS DETAILS
FOR
WORLD TRADE CENTER - N.Y.C.
FOR
THE PORT OF NEW YORK AUTHORITY

FLOOR TRUSS C32T9 58'-10" OVERALL
WORLD TRADE CENTER TOWERS A-B

FABRICATION BY: LACLEDE STEEL COMPANY
FABRICATED AT: MADISON, ILLINOIS
DESIGN DRAWING NO. 7-AB1-7 7-AB3-2 PLATE
APPROVED FOR FABRICATION BY [signature] FOR P.O.N.Y.A. DATE 12/2/68
DRAWN BY: [signature] DATE: MAY 27, 1968
APPROVED FOR FABRICATION BY ____ FOR FABRICATOR DATE ____
CHECKED BY: J.R. [illegible] DATE: MAY 27, 1968 IN CHARGE OF PROD. DEV.
DETAILED BY: [illegible]
FABRICATION CONT. NO. W.T.C. 221
SHEET NO. ST209

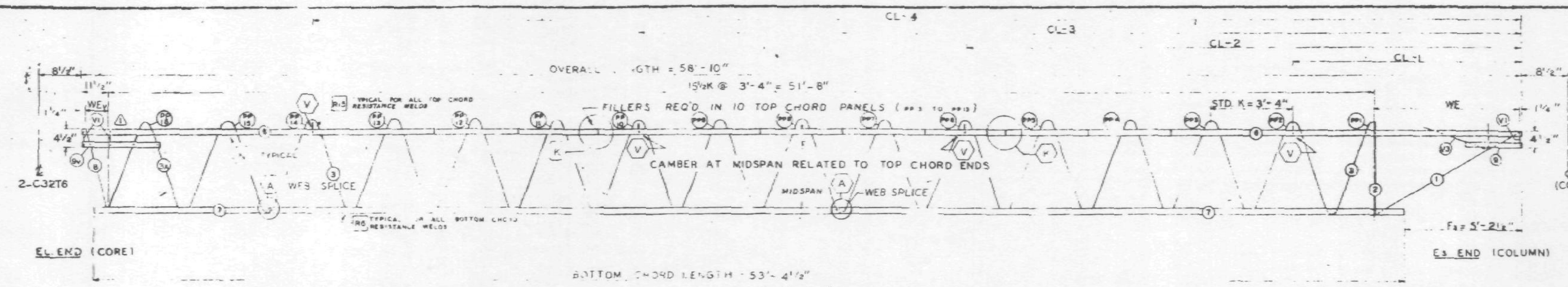

FABRICATION REQUIREMENTS

	DESIGN	TOLERANCE
CAMBER AT MIDSPAN	1 15/16"	± 3/8"
DESIGN DEPTH	[illegible]	± 1/4"
PANEL "K"	3'-4"	± 1/4"
OVERALL LENGTH	58'-10"	± 3/8"
WEB DEPTH	31 7/8"	± 1/4"

ALL PANEL POINTS RESISTANCE WELDED (x)
ARC WELDS INDICATED AT SHADED AREAS
AND AT BOTTOM CHORD WEB SPLICES
ALL WELD DETAILS SHOWN ON SHEETS ST290, ST291
AND ST292.
SEE SHEET ST295 FOR V1 & V3 DETAILS
LETTERS IN HEXAGON INDICATE WELD DETAIL, ie., (A).
LETTERS AND NUMBERS IN SQUARES INDICATE RESISTANCE WELD STRENGTH IDENTIFIED IN THE QUALITY CONTROL PROGRAM, ie., [R6].

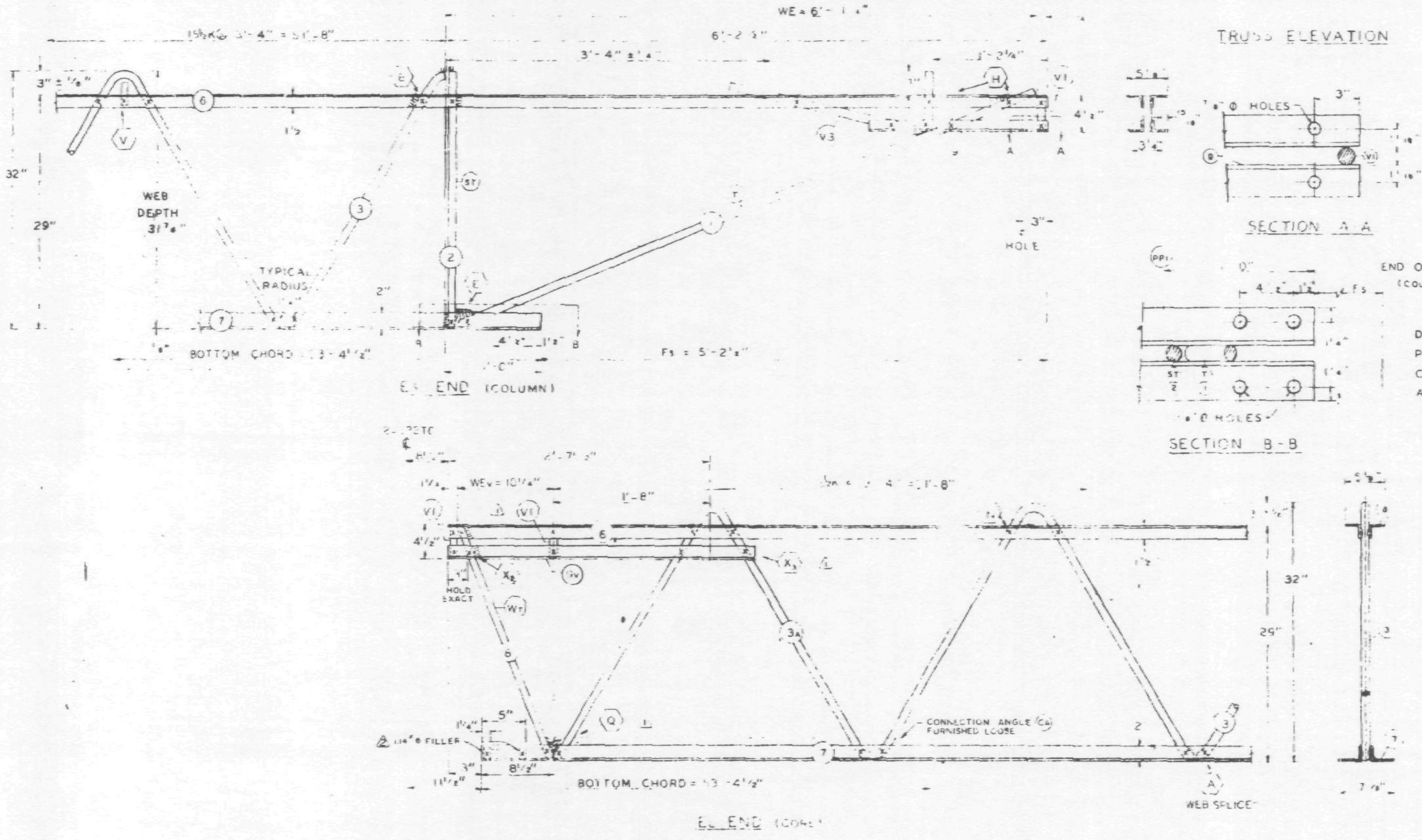

DAMPING UNIT CONNECTION
PLATE ATTACHED TO BOTTOM
CHORD (COL END) IN FIELD
ASSEMBLY BY [illegible]

NO.	DATE	REVISION	BY
2	8-30-68	BOTTOM CHORD FILLER	T.M.C.
1	7-1-68	AS NOTED	T.M.C.

REF. DRWG.

7-AB1-7	4-15-68
7-AB1-52	2-15-68
7-AB4-50 & 50.2	10-20-67
7-AB3-2	1-3-68
7-AB4-50.5	10-20-67
7-AB1-53	4-1-68

PAINT
LACLEDE ELECTROCOAT
RED NO. 10001

TRUSS DESIGNATION	TOP CHORD TWO ANGLES				BOTTOM CHORD TWO ANGLES				MAIN WEB "W"					FILLER		M c-c HOLES	CONNECTION FILLER			CHORD PLATE			
	MK	TYPE STEEL	CHORD SIZE	LENGTH	MK	TYPE STEEL	CHORD SIZE	LENGTH	MK	TYPE STEEL	DIA	LENGTH	NO OF K	NO	DIA		NO	DIA	LENGTH	MK	TYPE STEEL	SIZE	LENGTH
C32T9-5810	6	A242	2"x1½"x.31"	58'-10"	7	A36	[illegible] x 2 [illegible] x .33"	53'-4½"	3 / 3A	A36 / A242	1.09 / 1.14	44'-1[illegible] / 12'-5½"	13½K x 3'-4" = 45'-0" / 2K x 3'-4" = 6'-8"	13 / [illegible]	1.09 / [illegible]	—	4	1.09	3"	-	—	-	—

COLUMN END

Es END TRUSS DESIGNATION	BEARING ANGLES				WE	DIAGONAL "T" STRUT				VERTICAL "ST" STRUT				END STIFFENER MK V1			END STIFFENER MK V3			DOUBLE STRUT			
	MK	TYPE STEEL	CHORD SIZE	LENGTH		MK	TYPE STEEL	DIA	LENGTH	MK	TYPE STEEL	DIA	LENGTH	TYPE STEEL	DIA	LENGTH	TYPE STEEL	DIA	LENGTH	MK	TYPE STEEL	DIA	LENGTH
C32T9-5810	9	A242	2"x1½"x.25"	1'-10"	6'-1¼"	1	A242	1.14	6'-5"	2	A36	1.09	2'-7⅜"	A242	1.14	4⅜"	A242	1.14	2'-9½"	—	—	—	—

CHECK DIMENSION FOR TRUSS FAB LOCATION OF TRANS. TRUSS

CL-1	CL-2	CL-3	CL-4	Fs
9'-3½"	22'-10½"	35'-7½"	49'-6½"	5'-2½"

CORE END

EL END TRUSS DESIGNATION	BEARING ANGLES				WEv	VERTICAL "ST" STRUT				VERTICAL "ST" STRUT				END STIFFENER MK V1			END STIFFENER MK V2			END STIFFENER MK V4			WEB "Wc"					WEB "WT"					CONNECTION ANGLES (FURNISHED LOOSE)				
	MK	TYPE STEEL	CHORD SIZE	LENGTH		MK	TYPE STEEL	DIA	LENGTH	MK	TYPE STEEL	DIA	LENGTH	TYPE STEEL	DIA	LENGTH (2 REQ'D)	TYPE STEEL	DIA	LENGTH	TYPE STEEL	DIA	LENGTH	MK	TYPE STEEL	PCS	DIA	LENGTH	MK	TYPE STEEL	PCS	DIA	LENGTH	NO.	MK.	TYPE STEEL	ANGLE SIZE	LENGTH
C32T9-5810	9	A242	2"x1½"x.[illegible]"	3'-2"	10¼"	-	-	-	-	—	-	-	-	A242	1.14"	4⅜"	—	—	—	—	—	—	-	—	—	—	—	8	A242	1	1.14"	2'-5¾"	2	Ca	A242	2"x1½"x.37"	4'-4"

STEEL TRUSS DETAILS
FOR
WORLD TRADE CENTER - N.Y.C.
FOR
THE PORT OF NEW YORK AUTHORITY

FLOOR TRUSS C32T9 58'-10" OVERALL
WORLD TRADE CENTER TOWERS A-B

FABRICATION BY: LACLEDE STEEL COMPANY

FABRICATED AT MADISON, ILLINOIS		DESIGN DRAWING NO. 7-AB1-7 7-AB3-2	PLATE
APPROVED FOR FABRICATION BY [signature] FOR P.O.N.Y.A.	DATE 9/4/68	DRAWN BY: [illegible] DATE: MAY 27, 1968	
APPROVED FOR FABRICATION BY ______ FOR FABRICATOR	DATE	CHECKED BY: J.R. [illegible] DATE: MAY 27, 1968	IN CHARGE OF PROD. DEV.
LACLEDE STEEL CO. DETAILED BY: A.G. WEBER		FABRICATION CONT. NO. W.T.C. 221	SHEET NO. ST209

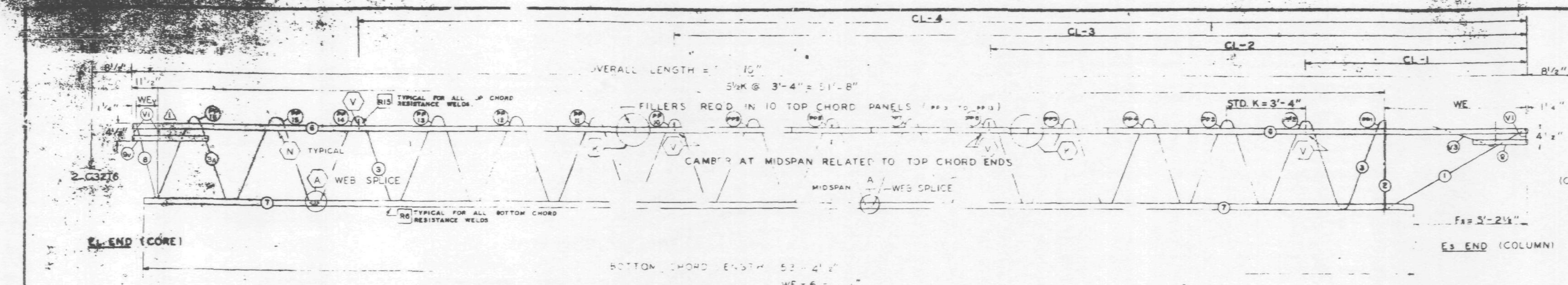

FABRICATION REQUIREMENTS	DESIGN	TOLERANCE
CAMBER AT MIDSPAN	1 15 .5"	/8"
DESIGN DEPTH	"	± 1/4"
PANEL "K"	3'-4"	± 1/
OVERALL LENGTH	58'-10"	± 3/
WEB DEPTH	31 7/8"	± 1/4"

ALL PANEL POINTS RESISTANCE WELDED
ARC WELDS INDICATED AT SHADED AREAS
AND AT BOTTOM CHORD WEB SPLICES
ALL WELD DETAILS SHOWN ON SHEETS ST290, ST291
AND ST292.
SEE SHEET ST FOR V1 & V3 DETAILS.
LETTERS IN HEXAGON INDICATE WELD DETAIL, i.e., (A).
LETTERS AND NUMBERS IN SQUARES INDICATE RESISTANCE WELD STRENGTH IDENTIFIED IN THE QUALITY CONTROL PROGRAM, i.e., R6.

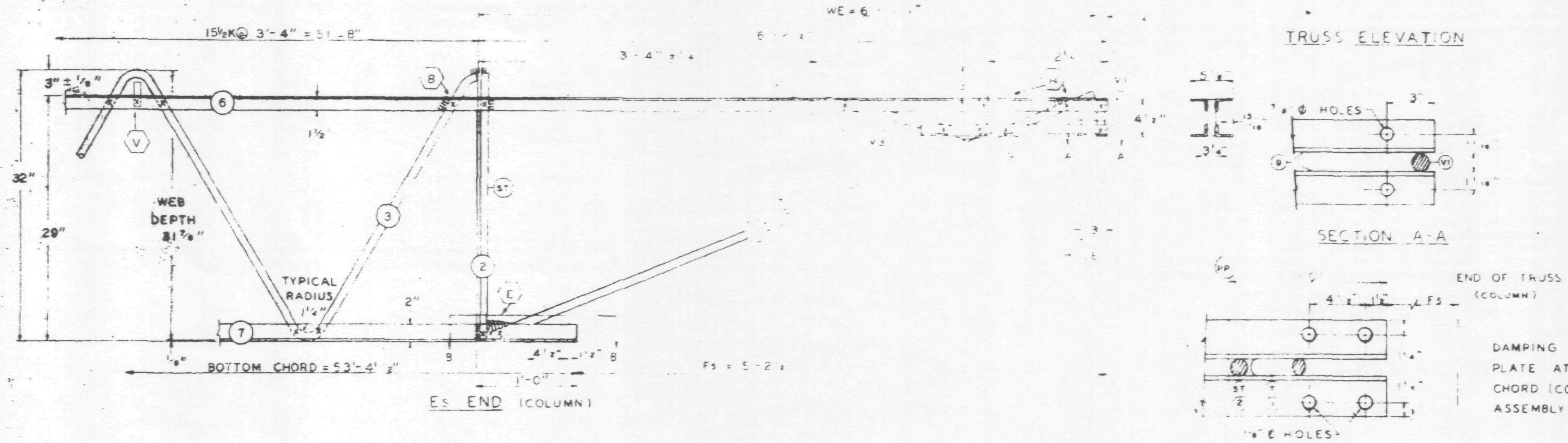

DAMPING UNIT CONNECTION PLATE ATTACHED TO BOTTOM CHORD (COL END) IN FIELD ASSEMBLY BY

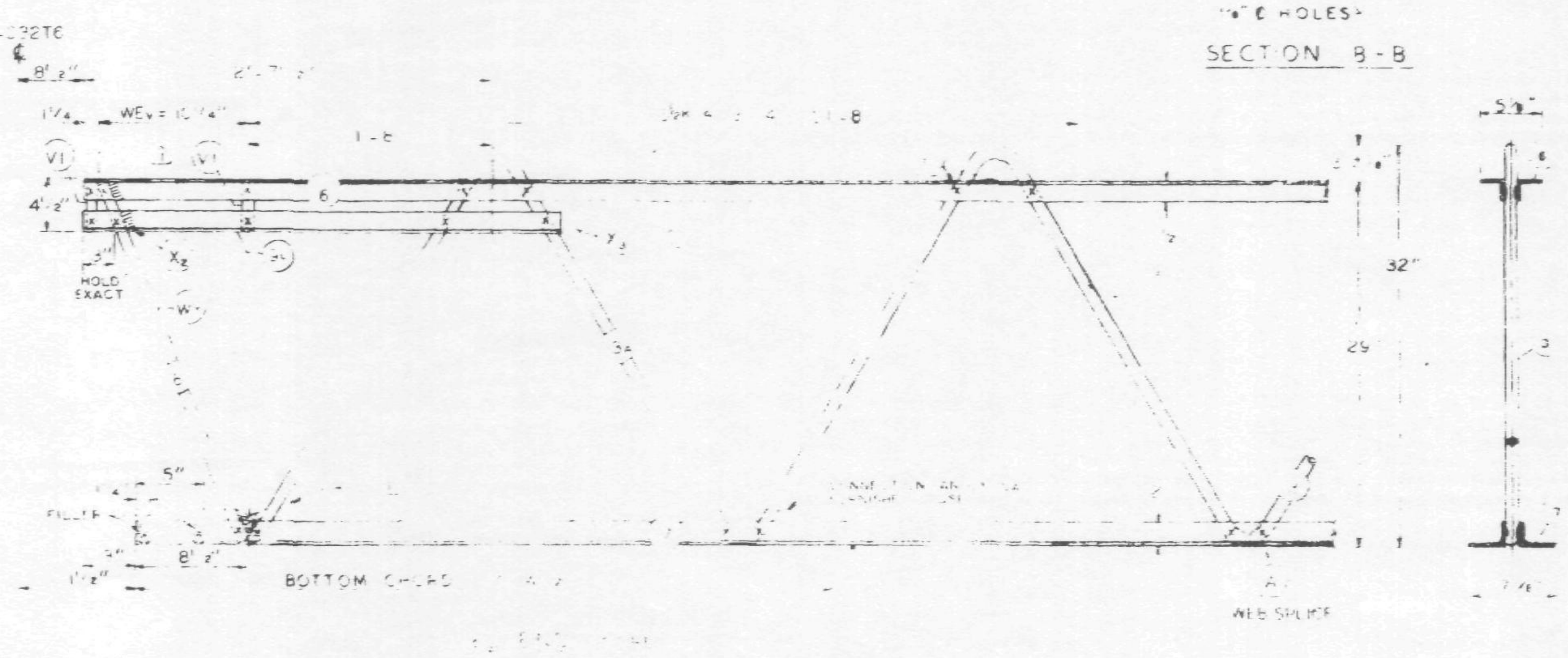

NO.	DATE	REVISION	BY
1	7-1-66	AS NOTED	T M

REF. DRWG.

7-AB1-7	4-15-68
7-AB1-52	2-15-68
7-AB4-50 & 50.2	10-20-67
7-AB3-2	1-3-68
7-AB4-50.5	10-20-67
7-AB1-53	4-1-68

PAINT
LACLEDE ELECTROCOAT
REC NO. 0001

TRUSS DESIGNATION	TOP CHORD TWO ANGLES				BOTTOM CHORD TWO ANGLES				MAIN WEB "W"					FILLERS		CHORD PLATE			
	MK.	TYPE STEEL	CHORD SIZE	LENGTH	MK.	TYPE STEEL	CHORD SIZE	LENGTH	MK.	TYPE STEEL	DIA	LENGTH	NO. OF K	NO.	DIA	MK.	TYPE STEEL	SIZE	LENGTH
C32T9-5810	6	A242	2"x1½"x.31"	58'-10"	7	A36	3"x2"x.33"	53'-4½"	3 / 3A	A36 / A242	1.09 / 1.14	84'-1" / 12'-5 2"	13½K 3'-4" / 2K 3'-4"	[illegible]	[illegible]				

COLUMN END	TRUSS DESIGNATION	BEARING ANGLES				WE	DIAGONAL "T" STRUT				VERTICAL "ST" STRUT				END STIFFENER MK V1			END STIFFENER MK V3			DOUBLE STRUT			
		MK.	TYPE STEEL	CHORD SIZE	LENGTH		MK.	TYPE STEEL	DIA	LENGTH	MK.	TYPE STEEL	DIA	LENGTH	TYPE STEEL	DIA	LENGTH	TYPE STEEL	DIA	LENGTH	MK.	TYPE STEEL	DIA	LENGTH
Es END	C32T9-5810	9	A242	2"x1½"x.25"	1'-10"	6'-1¼"	1	A242	.4"	6'-5"	2	A36	1.09"	2'-7⅞"	A242	.4"	4⅜"	A24.	.4"	2'-9"		—		—

CHECK DIMENSION FOR TRUSS FAB LOCATION OF TRANS. TRUSS				
CL-1	CL-2	CL-3	CL-4	Fs
9'-6½"	22'-10½"	36'-2½"	49'-6½"	5'-2½"

CORE END	TRUSS DESIGNATION	BEARING ANGLES				WEv	VERTICAL "STv" STRUT				VERTICAL "ST" STRUT				END STIFFENER MK V1			END STIFFENER MK V2			END STIFFENER MK V4			WEB "Wc"					WEB "WT"					CONNECTION ANGLES (FURNISHED LOOSE)				
		MK.	TYPE STEEL	CHORD SIZE	LENGTH		MK.	TYPE STEEL	DIA	LENGTH	MK.	TYPE STEEL	DIA	LENGTH	TYPE STEEL	DIA	LENGTH	TYPE STEEL	DIA	LENGTH	TYPE STEEL	DIA	LENGTH	MK.	TYPE STEEL	PCS	DIA	LENGTH	MK.	TYPE STEEL	PCS	DIA.	LENGTH	NO.	MK.	TYPE STEEL	ANGLE SIZE	LENGTH
EL END	C32T9-5810	9v	A242	2"x1½"x.31"	3'-2"	10¼"	—	—	—	—	—	—	—	—	A242	1.14"	4⅜"	—	—	—	—	—	—	—	—	—	—	—	8	A242	1	1.14"	2'-5¾"	2	CA	A242	2"x1½"x.37"	4'-4"

STEEL TRUSS DETAILS
FOR
WORLD TRADE CENTER - N.Y.C.
FOR
THE PORT OF NEW YORK AUTHORITY

FLOOR TRUSS C32T 58'-10" OVERALL
WORLD TRADE CENTER TOWERS A - B

FABRICATION BY LACLEDE STEEL COMPANY
FABRICATED AT MADISON, ILLINOIS
DESIGN DRAWING NO. 7-AB1-7 7-AB3-2 PLATE
APPROVED FOR FABRICATION BY JW FOR P.O.N.Y.A DATE 7/9/68
DRAWN BY: DATE: MAY 27, 1968
APPROVED FOR FABRICATION BY FOR FABRICATOR DATE
CHECKED BY: DATE: MAY 27, 1968
IN CHARGE OF PROD. DEV.
DETAILED BY A.C. WEBER
FABRICATION CONT. NO. W.T.C. 221
SHEET NO ST209

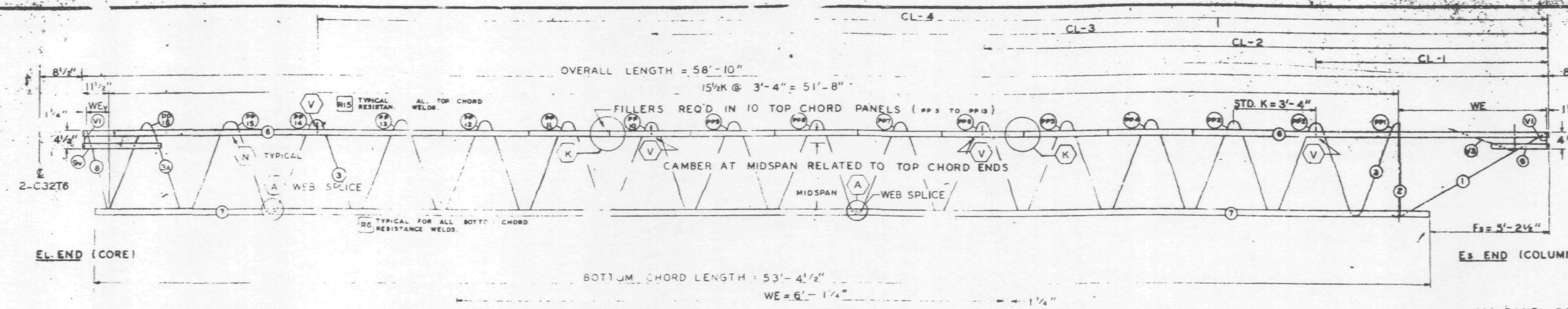

TRUSS ELEVATION

FABRICATION REQUIREMENTS	DESIGN	TOLERANCE
CAMBER AT MIDSPAN	1 15/16"	± 3/8"
DESIGN DEPTH	29"	± 1/4"
PANEL "K"	3'-4"	± 1/4"
OVERALL LENGTH	58'-10"	± 3/8"
WEB DEPTH	31 7/8"	± 1/4"

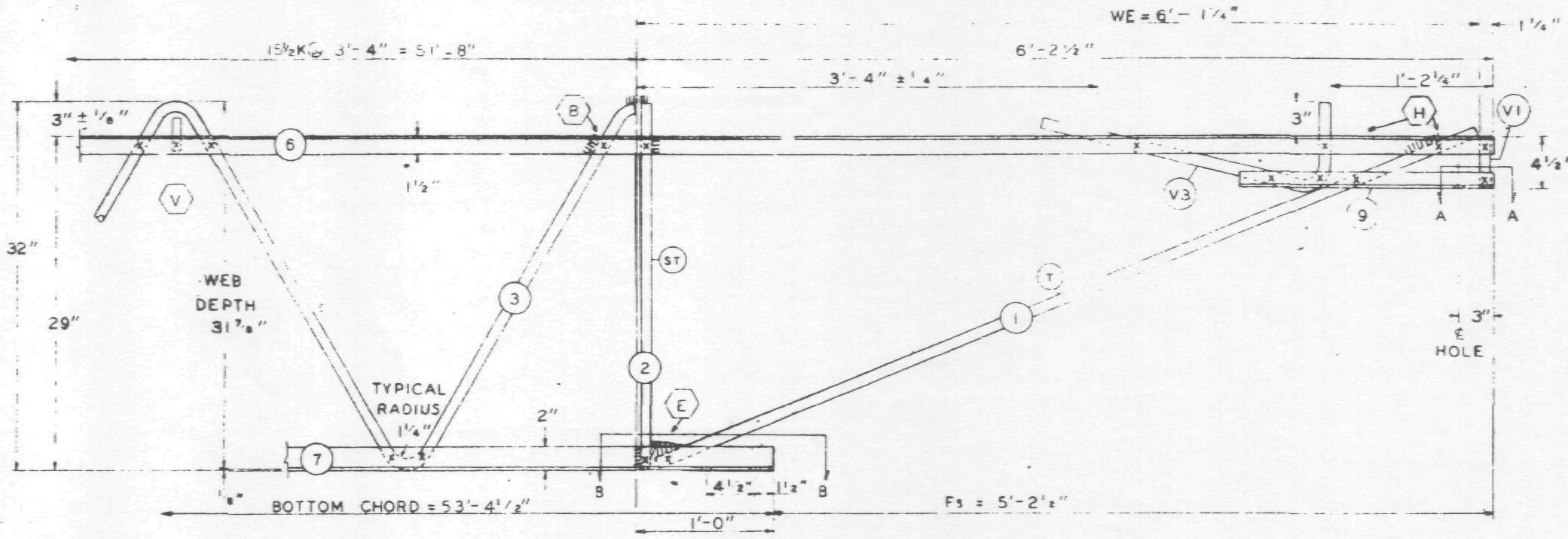

Es END (COLUMN)

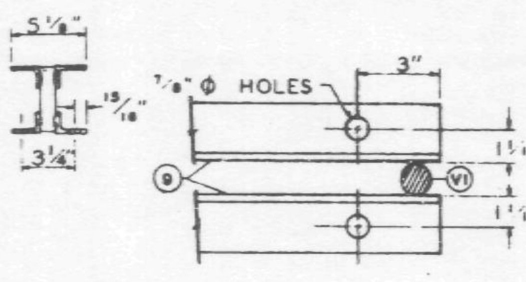

SECTION A-A

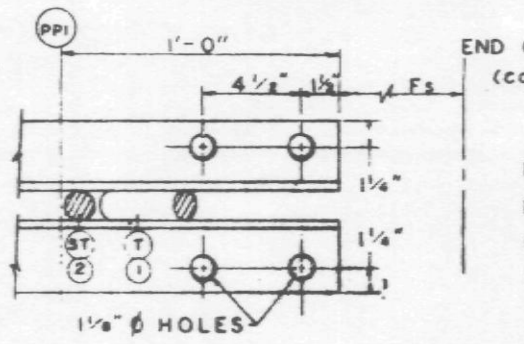

SECTION B-B

DAMPING UNIT CONNECTION PLATE ATTACHED TO BOTTOM CHORD (COL. END) IN FIELD. ASSEMBLY BY CONTRACT WTC 223.00.

ALL PANEL POINTS RESISTANCE WELDED (X)
ARC WELDS INDICATED AT SHADED AREAS AND AT BOTTOM CHORD WEB SPLICES (▬)
ALL WELD DETAILS SHOWN ON SHEETS ST290, ST291 AND ST292.
SEE SHEET ST295 FOR V1 & V3 DETAILS.
LETTERS IN HEXAGON INDICATE WELD DETAIL, ie., (A).
LETTERS AND NUMBERS IN SQUARES INDICATE RESISTANCE WELD STRENGTH IDENTIFIED IN THE QUALITY CONTROL PROGRAM, ie., [R6].

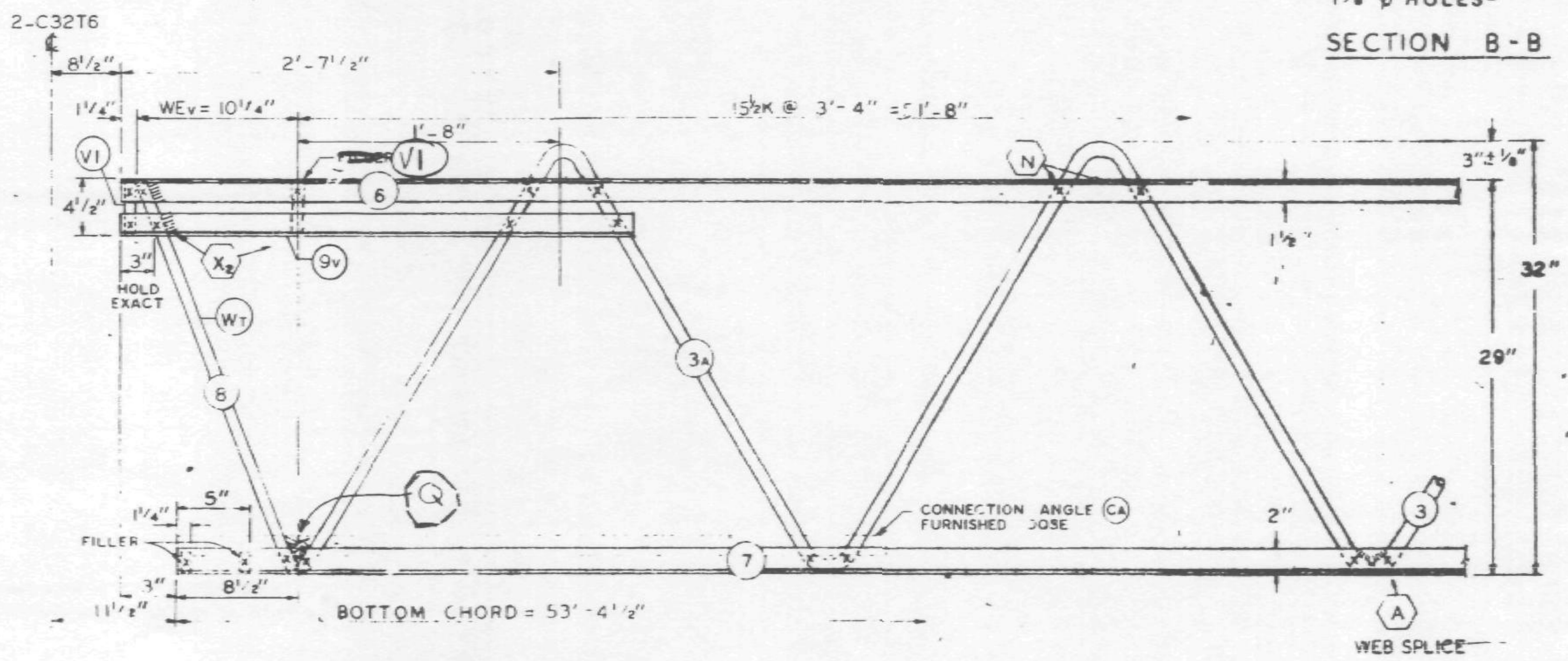

EL END (CORE)

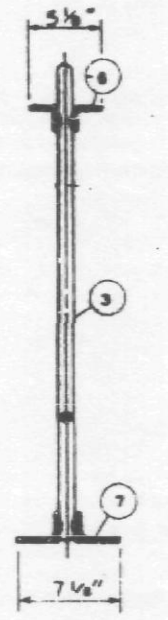

REF. DRWG.

7-AB1-7	4-15-68
7-AB1-62	2-15-68
7-AB4-50 & 50.2	10-20-67
7-AB3-2	1-3-68
7-AB4-50.5	10-20-67
7-AB1-53	4-1-68

PAINT

LACLEDE ELECTROCOAT
RED NO. 10001

TRUSS DESIGNATION	TOP CHORD TWO ANGLES MK.	TYPE STEEL	CHORD SIZE	LENGTH	BOTTOM CHORD TWO ANGLES MK	TYPE STEEL	CHORD SIZE	LENGTH	MAIN WEB "W" MK	TYPE STEEL	DIA	LENGTH	NO OF K	FILLER NO	DIA	"M" C-C HOLES	CONNECTION FILLER NO.	DIA.	LENGTH	CHORD PLATE MK	TYPE STEEL	SIZE	LENGTH
C32T9 - 58IC	6	A242	2"x1½"x.31	58'-10"	7	A36	[illegible] x .33	53'-4½"	3 / 3A	A36 / A242	1.09 / 1.14	84'-1½" / 12'-5½"	13½K @ 3'-4" = 45'-0" / 2K @ 3'-4" = 6'-8"	13	1.09"	—	4	1.09	3"	—	—	—	—

COLUMN END

Es END TRUSS DESIGNATION	BEARING ANGLES MK	TYPE STEEL	CHORD SIZE	LENGTH	WE	DIAGONAL "T" STRUT MK	TYPE STEEL	DIA	LENGTH	VERTICAL "ST" STRUT MK	TYPE STEEL	DIA	LENGTH	END STIFFENER MK. V1 TYPE STEEL	DIA	LENGTH	MK. V3 TYPE STEEL	DIA	LENGTH	DOUBLE STRUT MK.	TYPE STEEL	DIA	LENGTH
C32T9 58IC	9	A242	2"x1½"x.31	1'-10"	6'-1¼"	[illegible]	A242	[illegible]	6'-5"	2	A36	1.09"	2'-7⅜"	A242	1.14"	4⅜"	A242	1.14"	2'-9½"	—	—	—	—

CHECK DIMENSION FOR TRUSS FAB. LOCATION OF TRANS. TRUSS CL-1	CL-2	CL-3	CL-4	Fs
9'-6½"	22'-10⅛"	36'-2½"	49'-6½"	5'-2½"

CORE END

EL END TRUSS DESIGNATION	BEARING ANGLES MK	TYPE STEEL	CHORD SIZE	LENGTH	WEv	[illegible] STRUT MK	TYPE STEEL	DIA	LENGTH	VERTICAL "ST" STRUT MK	TYPE STEEL	DIA	LENGTH	END STIFFENER MK. V1 TYPE STEEL	DIA	LENGTH	NO	MK. V2 TYPE STEEL	DIA	LENGTH	MK. V4 TYPE STEEL	DIA	LENGTH	WEB "Wg" MK	TYPE STEEL	PCS	DIA	LENGTH	WEB "Wt" MK.	TYPE STEEL	PCS	DIA.	LENGTH	CONNECTION ANGLES (FURNISHED LOOSE) NO.	MK.	TYPE STEEL	ANGLE SIZE	LENGTH
C32T9 58IC	9A	A242	2"x1½"x.31	1'-2"	10¼"									A242	1.14"	4⅜"	2	—	—	—	—	—	—	—	—	—	—	—	8	A242	1	1.14"	2'-5¾"	2	CA	A242	2"x 1½"x 37"	4'-4"

SKILLING - HELLE CHRISTIANSEN - ROBERTSON
Structural & Civil Engineers
☐ APPROVED
☒ APPROVED AS NOTED
☐ RESUBMIT
☐ REJECTED
6/27/68 By SK

STEEL TRUSS DETAILS
FOR
WORLD TRADE CENTER - N.Y.C.
FOR
THE PORT OF NEW YORK AUTHORITY

FLOOR TRUSS C32T9 · 58'-10" OVERALL
WORLD TRADE CENTER TOWERS A-B

FABRICATION BY: LACLEDE STEEL COMPANY

FABRICATED AT: MADISON, ILLINOIS		DESIGN DRAWING NO. 7-AB1-7	PLATE
APPROVED FOR FABRICATION BY: ______ FOR P.O.N.Y.A.	DATE	DRAWN BY: [illegible] DATE: MAY 27, 1968	
APPROVED FOR FABRICATION BY: ______ FOR FABRICATOR	DATE.	CHECKED BY: [illegible] DATE: MAY 27, 1968	IN CHARGE OF PROD. DEV.
LACLEDE STEEL CO. DETAILED BY: [illegible]		FABRICATOR'S NO. W.T.C. 221 [illegible]	SHEET NO. ST209

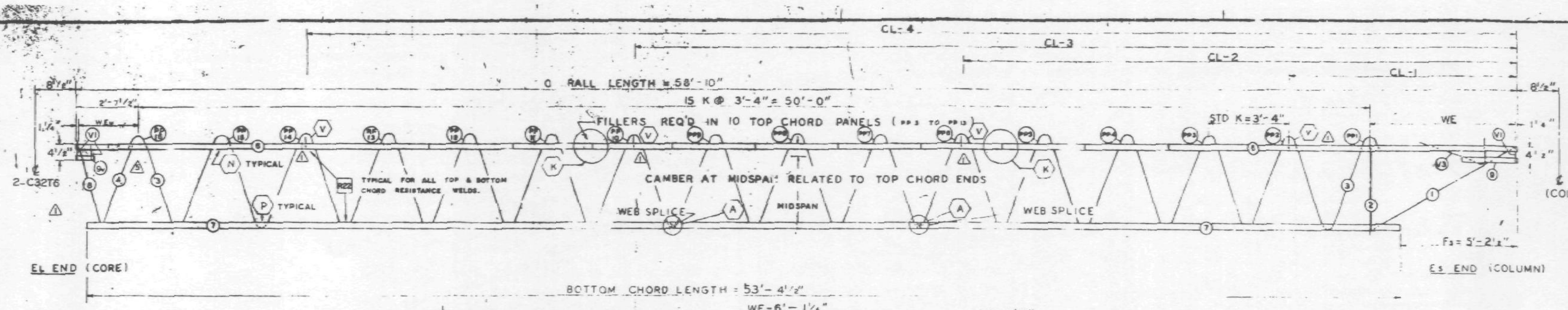

TRUSS ELEVATION

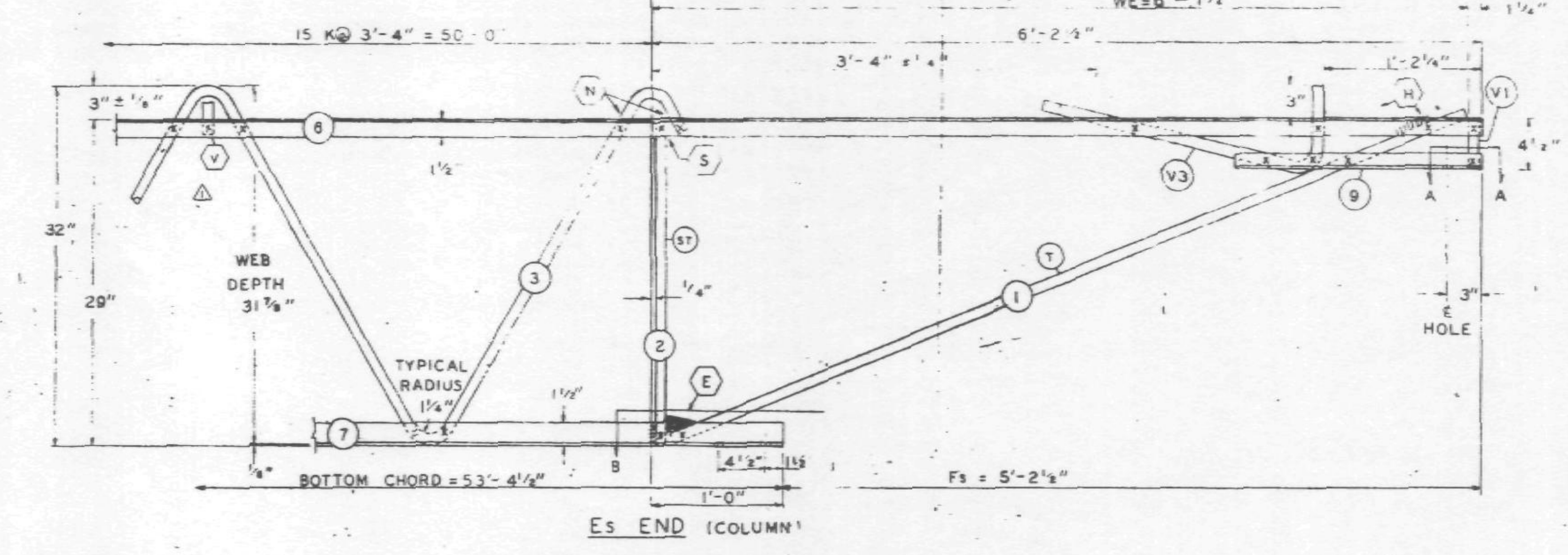

Es END (COLUMN)

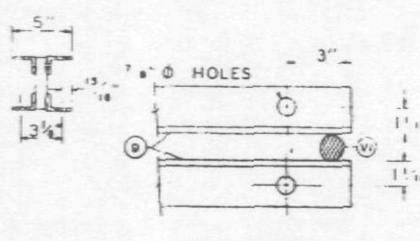

SECTION A-A

END OF TRUSS (COLUMN)

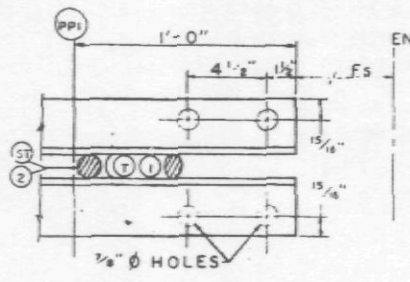

SECTION B-B

DAMPING UNIT CONNECTION PLATE ATTACHED TO BOTTOM CHORD (COL END) IN FIELD. ASSEMBLY BY CONTRACT WTC 223.00.

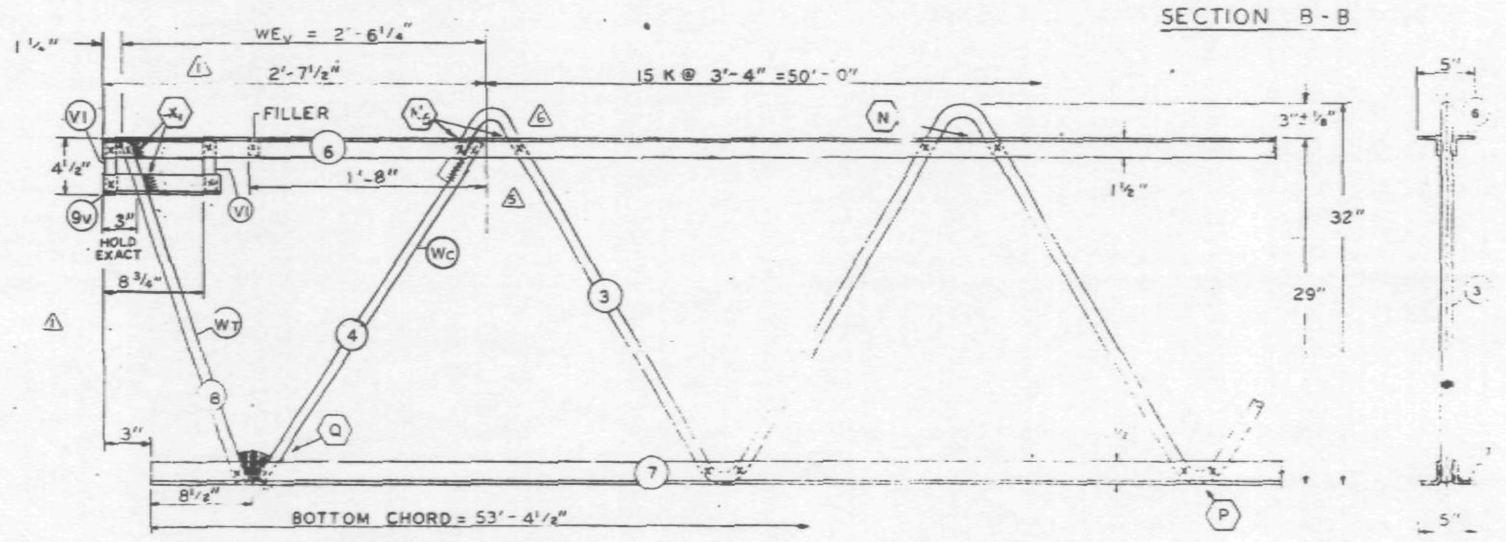

EL END (CORE)

FABRICATION REQUIREMENTS	DESIGN	TOLERANCE
CAMBER AT MIDSPAN ⚠1	1 11/16"	± 3/8"
DESIGN DEPTH	29"	± 1/4"
PANEL "K"	3'-4"	± 1/4"
OVERALL LENGTH	58'-10"	± 3/8"
WEB DEPTH	31 7/8"	± 1/4"

ALL PANEL POINTS RESISTANCE WELDED (✓) ARC WELDS INDICATED AT SHADED AREAS AND AT BOTTOM CHORD WEB SPLICES

⚠1 ALL WELD DETAILS SHOWN ON SHEETS ST290, ST291, AND ST292.

SEE SHEET ST295 FOR V1 & V3 DETAILS.

LETTERS IN HEXAGON INDICATE WELD DETAIL, ie., (A).

LETTERS AND NUMBERS IN SQUARES INDICATE RESISTANCE WELD STRENGTH IDENTIFIED IN THE QUALITY CONTROL PROGRAM, ie., R22.

NO.	DATE	REVISION	BY
6	5-8-70	AS NOTED	G.D.C.
5	[illegible]-1-70	AS NOTED	G.D.C.
4	12-3-68	GENERAL	G.D.C.
3	7-1-68	CONNECTION FILLER	T.M.C.
2	6-27-68	AS NOTED	T.M.C.
1	5-27-68	AS NOTED	T.M.C.

REF. DRWG.

7-AB1-8	7-22-68
7-AB-52	2-15-68
7-AB4-50	8-1-68
7-AB-2	1-3-68
7-AB4-50.5	10-20-67
7-AB1-53	7-22-68

PAINT

LACLEDE ELECTROCOAT

RED NO. 10001

TRUSS DESIGNATION	TOP CHORD TWO ANGLES MK.	TYPE STEEL	CHORD SIZE	LENGTH	BOTTOM CHORD TWO ANGLES MK.	TYPE STEEL	CHORD SIZE	LENGTH	MAIN WEB "W" ⚠6 MK.	TYPE STEEL	DIA.	LENGTH	NO. OF K	FILLER NO.	DIA.	"M" C/C HOLES	CONNECTION FILLERS NO.	DIA.	LENGTH	CHORD PLATE MK.	TYPE STEEL	SIZE	LENGTH	TRUSS DATA	
C32T10-5810	6	A242	2"x1 1/2"x.25"	58'-10" ⚠1	7	A242	2"x1 1/2"x.25"	53'-4 1/2" ⚠1	3	A242	.92"	94'-5"	15 @ 3'-4"=50-0"	11	.92"	—	4 ⚠3	.92	5"	—	—	—	—		

COLUMN END

Es END TRUSS DESIGNATION	BEARING ANGLES MK.	TYPE STEEL	CHORD SIZE	LENGTH	WE	DIAGONAL "T" STRUT MK.	TYPE STEEL	DIA.	LENGTH	VERTICAL "ST" STRUT MK.	TYPE STEEL	DIA.	LENGTH	END STIFFENER MK. V1 TYPE STEEL	DIA.	LENGTH	MK. V3 TYPE STEEL	DIA.	LENGTH	DOUBLE STRUT MK.	TYPE STEEL	DIA.	LENGTH
C32T10-5810	9	A242	2"x1 1/2"x.25"	1'-10"	6'-1 1/4"	1	A242	.98"	6'-5"	2	A242	[illegible]	[illegible]-4 3/8"	A242	.98"	4 3/8"	A242	[illegible]	[illegible]-9 1/2"	—	—	—	—

CHECK DIMENSION FOR TRUSS FAB.

LOCATION OF TRANS. TRUSS

CL-1	CL-2	CL-3	CL-4	Fs
9'-6 1/2"	22'-10 1/2"	36'-2 1/2"	49'-6 1/2"	5'-2 1/2"

CORE END

EL END TRUSS DESIGNATION	BEARING ANGLES MK.	TYPE STEEL	CHORD SIZE	LENGTH	WEv	VERTICAL "STv" STRUT MK.	TYPE STEEL	DIA.	LENGTH	VERTICAL "ST" STRUT MK.	TYPE STEEL	DIA.	LENGTH	END STIFFENER MK. V1 TYPE STEEL	DIA.	LENGTH (2 REQ'D)	MK. V2 TYPE STEEL	DIA.	LENGTH	MK. V4 TYPE STEEL	DIA.	LENGTH	WEB "Wc" ⚠5 MK.	TYPE STEEL	PCS	DIA.	LENGTH	WEB "WTv" MK.	TYPE STEEL	PCS	DIA.	LENGTH
C32T10 5810	9v	A242	2"x1 1/2"x.25" ⚠1	10"	2'-6 1/2" ⚠2	—	— ⚠1	—	—	—	—	—	—	A242 ⚠1	.92"		—	—	—	—	—	—	4	A242	1	.92	2'-10"	8	A242	1	.92"	2'-5 3/4" ⚠2

STEEL TRUSS DETAILS

FOR

WORLD TRADE CENTER - N.Y.C

FOR

THE PORT OF NEW YORK AUTHORITY

FLOOR TRUSS C32T10 58'-10" OVERALL

WORLD TRADE CENTER TOWERS A-B

FABRICATION BY: LACLEDE STEEL COMPANY			
FABRICATED AT: MADISON, ILLINOIS		DESIGN DRAWING NO. 7-AB1-8 7-AB1-7	PLATE
APPROVED FOR FABRICATION BY: FOR P.O.N.Y.A.	DATE 5/?/70	DRAWN BY: L.S. DATE: FEB. 24, 1968	
APPROVED FOR FABRICATION BY: FOR FABRICATOR	DATE.	CHECKED BY: J.E. PAUL DATE: FEB. 26, 1968	IN CHARGE OF PROD. DEV.
DETAILED BY: A.C. WEBER		FABRICATION CONT. NO. W.T.C. 221 [illegible]	SHEET NO. ST210

FABRICATION REQUIREMENTS		
	[illegible]	[illegible]
CAMBER AT MIDSPAN ⚠	1¹¹⁄₁₆"	[illegible]
DESIGN DEPTH	32"	[illegible]
PANEL "K"	[illegible]	[illegible]
OVERALL LENGTH	58'-10"	[illegible]
WEB DEPTH	31 [illegible]	[illegible] 1/4"

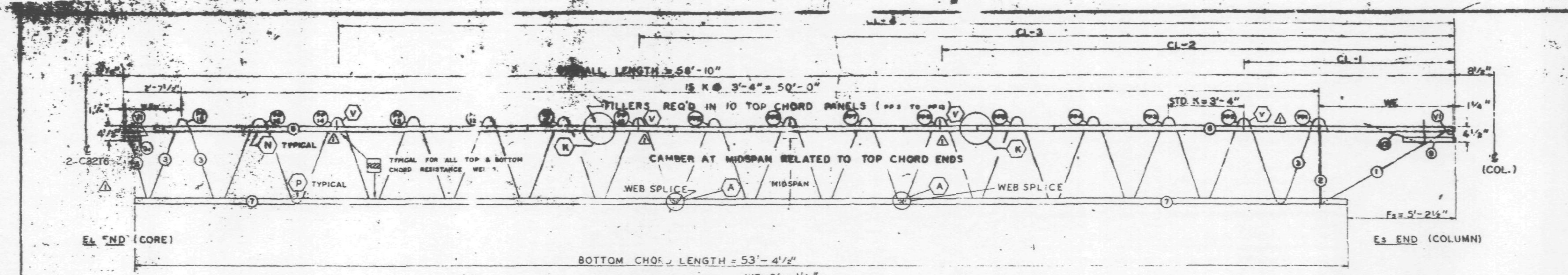

TRUSS ELEVATION

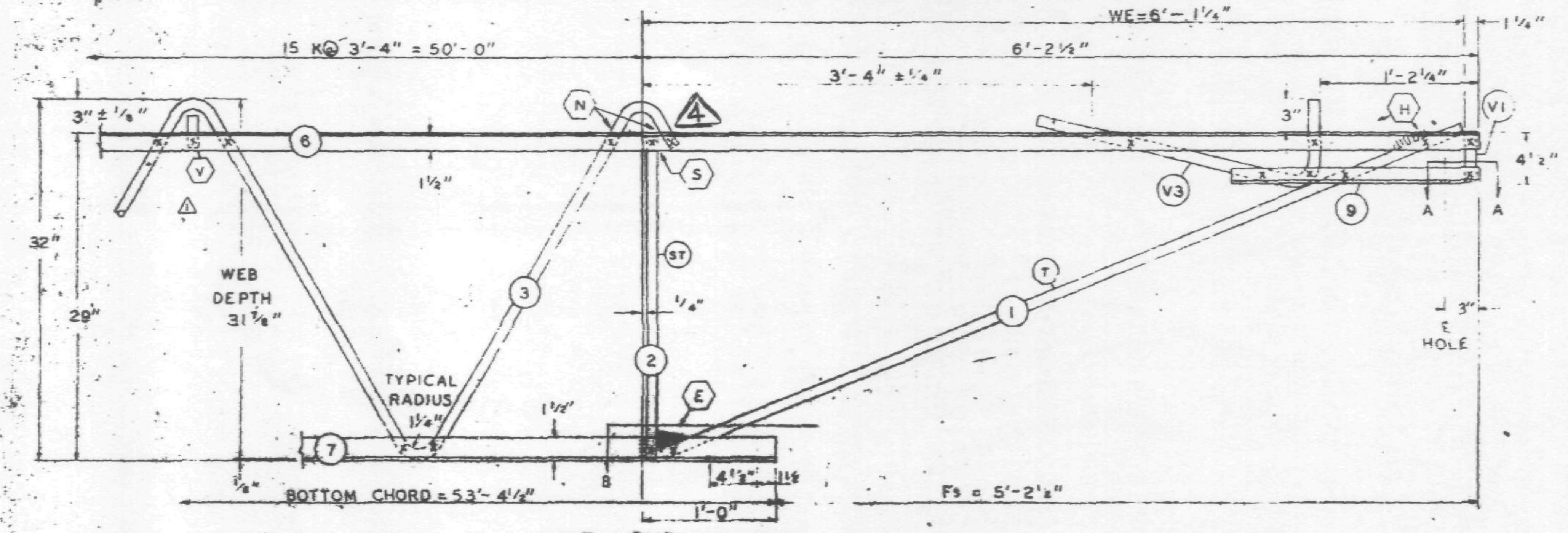

Es END (COLUMN)

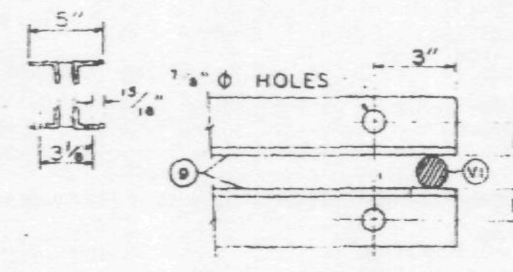

SECTION A-A

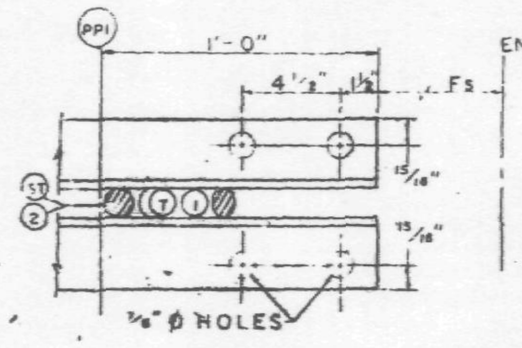

SECTION B-B

ALL PANEL POINTS RESISTANCE WELDED (X)
ARC WELDS INDICATED AT SHADED AREAS
AND AT BOTTOM CHORD WEB SPLICES (▬)
ALL WELD DETAILS SHOWN ON SHEETS ST290, ST291, AND ST292.
SEE SHEET ST295 FOR V1 & V3 DETAILS.
LETTERS IN HEXAGON INDICATE WELD DETAIL, ie., (A).
LETTERS AND NUMBERS IN SQUARES INDICATE RESISTANCE WELD STRENGTH IDENTIFIED IN THE QUALITY CONTROL PROGRAM, ie., R22.

DAMPING UNIT CONNECTION PLATE ATTACHED TO BOTTOM CHORD (COL. END) IN FIELD. ASSEMBLY BY CONTRACT WTC 223.00.

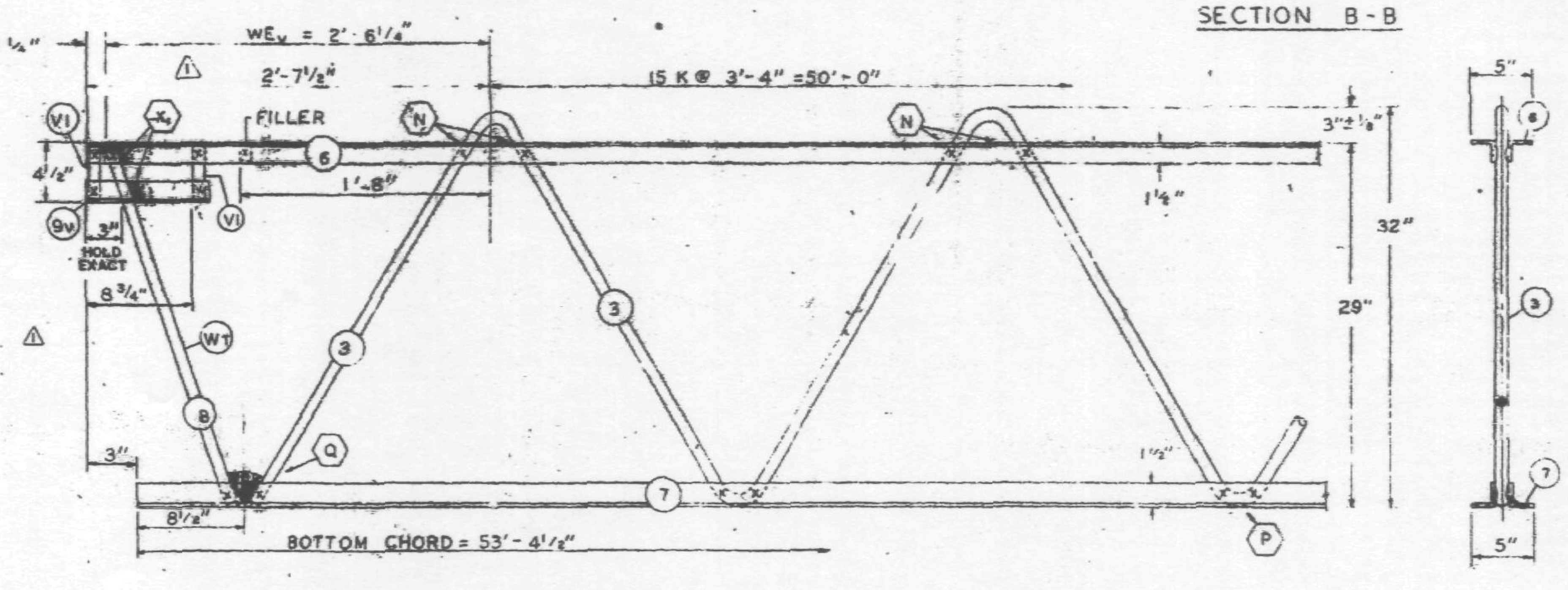

EL END (CORE)

NO.	DATE	REVISION	BY
4	12-3-68	GENERAL	G.D.G.
3	7-1-68	CONNECTION FILLER	T.M.C.
2	6-27-68	AS NOTED	T.M.C.
1	5-27-68	AS NOTED	T.M.C.

REF. DRWG.

7-AB1-8	7-22-68
7-AB1-52	2-15-68
7-AB4-50	8-1-68
7-AB3-2	1-3-68
7-AB4-50,5	10-20-67
7-AB1-53	7-22-68

PAINT

LACLEDE ELECTROCOAT
RED NO. 10001

TRUSS DESIGNATION	TOP CHORD TWO ANGLES MK.	TYPE STEEL	CHORD SIZE	LENGTH	BOTTOM CHORD TWO ANGLES MK.	TYPE STEEL	CHORD SIZE	LENGTH	MAIN WEB "W" MK.	TYPE STEEL	DIA.	LENGTH	NO. OF K	FILLER NO.	DIA.	"M" C/C HOLES	CONNECTION FILLERS NO.	DIA.	LENGTH	CHORD PLATE MK	TYPE STEEL	SIZE	LENGTH	TRUSS DATA	
C32T10-5810	6	A242	2"x1½"x.25"	58'-10" ⚠1	7	A242	2"x1½"x.25"	53'-4½" ⚠1	3	A242	.92"	97'-0"	15½ @ 3'-4" = 51'-8"	11	.92"	——	4	.92	3" ⚠3	—	——	——	——		

CHECK DIMENSION FOR TRUSS FAB.

LOCATION OF TRANS. TRUSS				
CL-1	CL-2	CL-3	CL-4	Fs
9'-6½"	22'-10½"	36'-2½"	49'-6½"	5'-2½"

COLUMN END

Es END TRUSS DESIGNATION	BEARING ANGLES MK.	TYPE STEEL	CHORD SIZE	LENGTH	WE	DIAGONAL "T" STRUT MK	TYPE STEEL	DIA	LENGTH	VERTICAL "ST" STRUT MK.	TYPE STEEL	DIA.	LENGTH	END STIFFENER MK. V1 TYPE STEEL	DIA.	LENGTH	MK. V3 TYPE STEEL	DIA.	LENGTH	DOUBLE STRUT MK.	TYPE STEEL	DIA	LENGTH
C32T10-5810	9	A242	2"x1½"x.25"	1'-10"	6'-1¼"	1	A242	.98"	6'-5"	2	A242	.92"	2'-4⅞"	A242	.98"	4⅜"	A242	.98"	2'-9½"	—	——	—	——

CORE END

EL END TRUSS DESIGNATION	BEARING ANGLES MK.	TYPE STEEL	CHORD SIZE	LENGTH	WEv	VERTICAL "STv" STRUT MK	TYPE STEEL	DIA	LENGTH	VERTICAL "ST" STRUT MK	TYPE STEEL	DIA.	LENGTH	END STIFFENER MK. V1 TYPE STEEL	DIA.	LENGTH (2 REQ'D)	MK. V2 TYPE STEEL	DIA.	LENGTH	MK. V4 TYPE STEEL	DIA.	LENGTH	WEB "Wc" MK	TYPE STEEL	PCS	DIA	LENGTH	WEB "WTv" MK	TYPE STEEL	PCS	DIA	LENGTH
C32T10-5810	9v	A242	2"x1½"x.25" ⚠1	10"	2'-6¼" ⚠2				—— ⚠1					A242	.92"	4⅜" ⚠4	—	—	——	—	——	——	—	——	—	—	——	8	A242	1	.92"	2'-5¼"

STEEL TRUSS DETAILS
FOR
WORLD TRADE CENTER - N.Y.C.
FOR
THE PORT OF NEW YORK AUTHORITY

FLOOR TRUSS C32T10 58'-10" OVERALL
WORLD TRADE CENTER TOWERS A-B

FABRICATION BY: LACLEDE STEEL COMPANY	
FABRICATED AT: MADISON, ILLINOIS	DESIGN DRAWING NO. 7-AB1-8 7-AB3-2 PLATE
APPROVED FOR FABRICATION BY [signature] FOR P.O.N.Y.A. DATE 2/9/68	DRAWN BY: [illegible] DATE: FEB. 24, 1968
APPROVED FOR FABRICATION BY ____ FOR FABRICATOR DATE	CHECKED BY: [illegible] DATE FEB. [illegible] IN CHARGE OF [illegible]
DETAILED BY [illegible]	FABRICATION [illegible] W.T.C. 22[illegible] SHEET NO. ST[illegible]

FABRICATION [illegible]		
CAMBER AT MIDSPAN	[illegible]	[illegible]
DESIGN DEPTH	[illegible]	[illegible]
PANEL "K"	[illegible]	[illegible]
OVERALL LENGTH	58'-10"	[illegible]
WEB DEPTH	31 7/8"	[illegible]

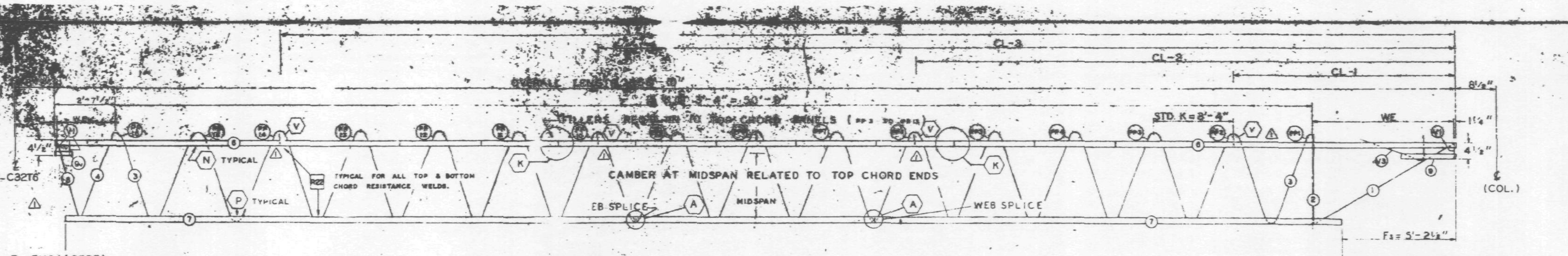

EL END (CORE)

Es END (COLUMN)

BOTTOM CHORD LENGTH = 53'-4½"

TRUSS ELEVATION

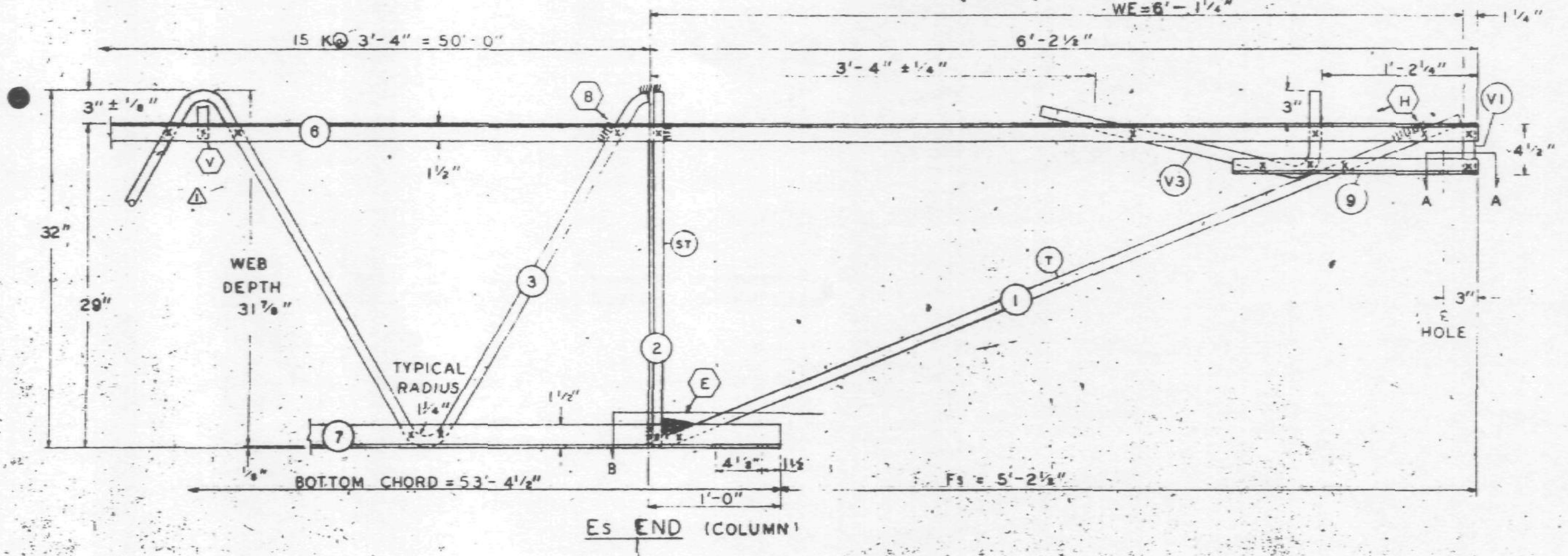

Es END (COLUMN)

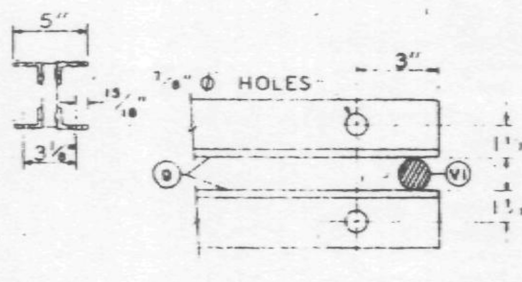

SECTION A-A

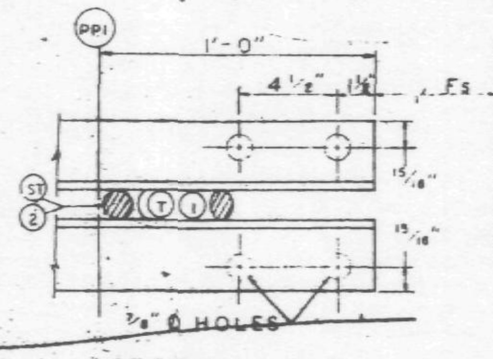

SECTION B-B

ALL PANEL POINTS RESISTANCE WELDED (X)
ARC WELDS INDICATED AT SHADED AREAS AND AT BOTTOM CHORD WEB SPLICES
ALL WELD DETAILS SHOWN ON SHEETS ST290, ST291, AND ST292.
SEE SHEET ST295 FOR VI & V3 DETAILS.
LETTERS IN HEXAGON INDICATE WELD DETAIL, ie., (A).
LETTERS AND NUMBERS IN SQUARES INDICATE RESISTANCE WELD STRENGTH IDENTIFIED IN THE QUALITY CONTROL PROGRAM, ie., R22.

DAMPING UNIT CONNECTION PLATE ATTACHED TO BOTTOM CHORD (COL END) IN FIELD.
ASSEMBLY BY CONTRACT WTC 223.00.

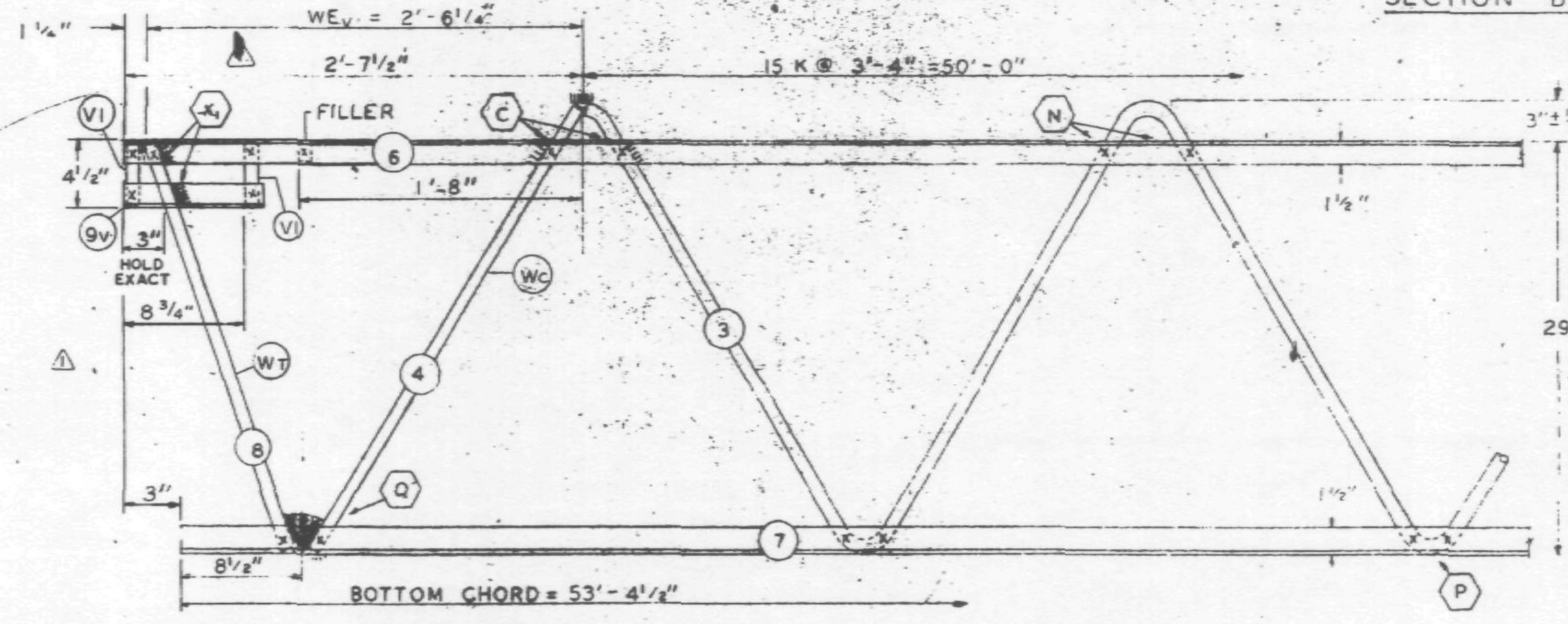

EL END (CORE)

NO.	DATE	REVISION	BY
3	7-1-68	CONNECTION FILLER	T.M.C.
2	6-27-68	AS NOTED	T.M.C.
1	5-27-68	AS NOTED	T.M.C.

REF. DRWG.

7-AB1-8	(1) 5-10-68
7-AB1-52	2-15-68
7-AB4-50 & 50.2	10-20-67
7-AB3-2	1-3-68
7-AB4-50.5	10-20-67
7-AB1-53	4-1-68

PAINT

LACLEDE ELECTROCOAT
RED NO. 10001

TRUSS DESIGNATION	TOP CHORD TWO ANGLES MK.	TYPE STEEL	CHORD SIZE	LENGTH	BOTTOM CHORD TWO ANGLES MK.	TYPE STEEL	CHORD SIZE	LENGTH	MAIN WEB "W" MK.	TYPE STEEL	DIA.	LENGTH	NO. OF K	FILLER NO.	DIA	"M" C/C HOLES	CONNECTION FILLERS NO.	DIA.	LENGTH	CHORD PLATE MK	TYPE STEEL	SIZE	LENGTH	TRUSS DATA	
C32T10-5810	6	A242	2"x1½"x.25"	58'-10" (1)	7	A242	2"x1½"x.25"	53'-4½" (1)	3	A242	.92"	93'-5¼"	15@ 3'-4"=50'-0"	11	.92"	—	4 (3)	.92	3"	—	—	—	—		

COLUMN END

Es END TRUSS DESIGNATION	BEARING ANGLES MK.	TYPE STEEL	CHORD SIZE	LENGTH	WE	DIAGONAL "T" STRUT MK	TYPE STEEL	DIA	LENGTH	VERTICAL "ST" STRUT MK.	TYPE STEEL	DIA.	LENGTH	END STIFFENER MK. VI TYPE STEEL	DIA.	LENGTH	MK. V3 TYPE STEEL	DIA.	LENGTH	DOUBLE STRUT MK.	TYPE STEEL	DIA.	LENGTH
C32T10-5810	9	A242	2"x1½"x.25"	1'-10"	6'-1¼"	1	A242	.98"	6'-5"	2	A242	.92"	2'-7⅞"	A242	.98"	"	A242	[illegible]	2'-9½"	—	—	—	—

CHECK DIMENSION FOR TRUSS FAB.

LOCATION OF TRANS. TRUSS				
CL-1	CL-2	CL-3	CL-4	Fs
9'-6½"	22'-10½"	36'-2½"	49'-6½"	5'-2½"

CORE END

EL END TRUSS DESIGNATION	BEARING ANGLES MK.	TYPE STEEL	CHORD SIZE	LENGTH	WEᵥ	VERTICAL "STᵥ" STRUT MK.	TYPE STEEL	DIA	LENGTH	VERTICAL "ST" STRUT MK.	TYPE STEEL	DIA.	LENGTH	END STIFFENER MK. VI TYPE STEEL	DIA.	LENGTH (2 REQ'D)	MK. V2 TYPE STEEL	DIA.	LENGTH	MK. V4 TYPE STEEL	DIA.	LENGTH	WEB "Wc" MK	TYPE STEEL	PCS	DIA	LENGTH	WEB "WT" MK.	TYPE STEEL	PCS	DIA.	LENGTH
C32T10 5810	9v	A242 (1)	2"x1½"x.25"	10"	2'-6¼" (2)	—	— (1)	—	—	—	—	—	—	A242	.92" (1)	4⅞"	—	—	—	—	—	—	4	A242	1	.92"	3'-0½"	8	A242	1	.92"	2'-5¾" (2)

STEEL TRUSS DETAILS
FOR
WORLD TRADE CENTER - N.Y.C.
FOR
THE PORT OF NEW YORK AUTHORITY

FLOOR TRUSS C32T10 58'-10" OVERALL

WORLD TRADE CENTER TOWERS A-B

FABRICATION BY: LACLEDE STEEL COMPANY

FABRICATED AT: MADISON, ILLINOIS		DESIGN DRAWING NO. 7-AB1-8 7-AB[illegible] PLATE [illegible]
APPROVED FOR FABRICATION BY: ____ FOR P.O.N.Y.A.	DATE 8/16/68	DRAWN BY: [illegible] DATE: FEB. 24, 1968
APPROVED FOR FABRICATION BY ____ FOR FABRICATOR	DATE.	CHECKED BY: [illegible] IN CHARGE OF DATE FEB. [illegible] REV.
DETAILED BY: A.G. WEBER		FABRICATION [illegible] SHEET NO. W.T.C. 221 ST210

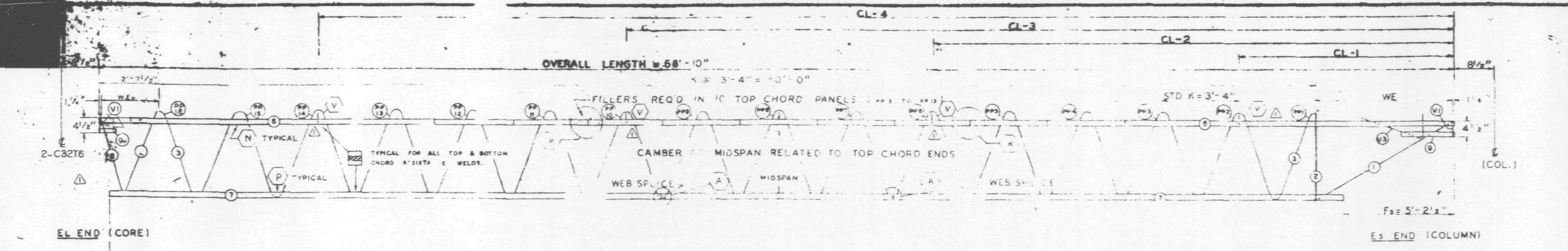

FABRICATION		
CAMBER AT MIDSPAN ⚠1	1 11/16"	6"
DESIGN DEPTH	[illegible]	[illegible]
PANEL "K"	[illegible]	[illegible]
OVERALL LENGTH	58'-10"	[illegible]
WEB DEPTH	31 7/8"	[illegible]

ALL PANEL POINTS RESISTANCE WELDED ( )
ARC WELDS INDICATED AT SHADED AREAS
AND AT BOTTOM CHORD WEB SPLICES (▬)
⚠1 ALL WELD DETAILS SHOWN ON SHEETS ST290, ST291, AND ST292
SEE SHEET ST295 FOR V1 & V3 DETAILS.
LETTERS IN HEXAGON INDICATE WELD DETAIL, ie., (A).
LETTERS AND NUMBERS IN SQUARES INDICATE RESISTANCE WELD STRENGTH IDENTIFIED IN THE QUALITY CONTROL PROGRAM, ie., R22.

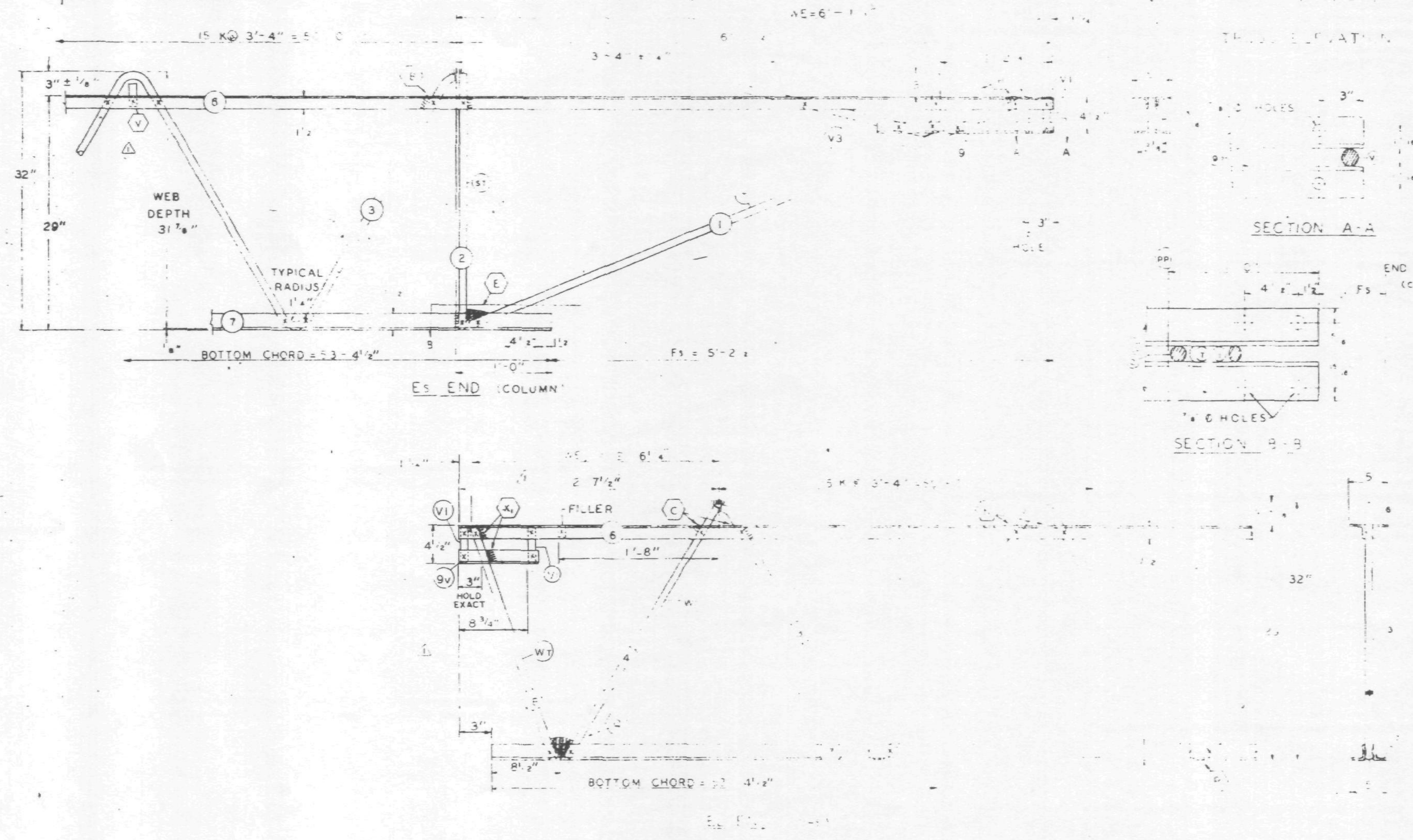

DAMPING UNIT CONNECTION
PLATE ATTACHED TO BOTTOM
CHORD (COL END) IN FIELD.
ASSEMBLY BY CONTRACT WTC 223.00.

NO.	DATE	REVISION	BY
⚠2	6-27-68	AS NOTED	T.M.C.
⚠1	5-27-68	AS NOTED	T.M.C.

REF. DRWG.

7-AB1-8	⚠1 5-10-68
7-AB1-52	2-15-68
7-AB4-50 & 50.2	10-20-67
7-AB3-2	1-3-68
7-AB4-50.5	10-20-67
7-AB1-53	4-1-68

PAINT

LACLEDE ELECTROCOAT
RED NO. 10001

TRUSS DESIGNATION	TOP CHORD TWO ANGLES MK	TYPE STEEL	CHORD SIZE	LENGTH	BOTTOM CHORD TWO ANGLES MK	TYPE STEEL	CHORD SIZE	LENGTH	MAIN WEB MK	TYPE STEEL	DIA	LENGTH	NO. OF K	FILLER ...
C32T10-5810	6	A242	2"x1½"x.25"	58'-[illegible]	7	A242	2"x1½"x.25"	53'-4½"	3	A242	.92"	[illegible]	15 @ 3'-4"	[illegible]

COLUMN END

Es END	TRUSS DESIGNATION	BEARING ANGLES MK	TYPE STEEL	CHORD SIZE	LENGTH	WE	DIAGONAL "T" STRUT MK	TYPE STEEL	DIA	LENGTH	VERTICAL "ST" STRUT MK	TYPE STEEL	DIA	LENGTH	END STIFFENER MK V1 TYPE STEEL	DIA	LENGTH	MK V3 TYPE STEEL	DIA.	LENGTH	MK	TYPE STEEL	DIA	LENGTH
	C32T10-5810	9	A242	2"x1½"x.25"	[illegible]10"	6'-1¼"	1	A242	.98	6'-5"	2	A242	.92"	2'-7⅝"	A242	.98"	4⅜"	A242	.8"	2 9½	—	—	—	—

CHECK DIMENSION FOR TRUSS FAB LOCATION OF TRANS TRUSS

CL-1	CL-2	CL-3	CL-4	Fs
9'-6½"	22'-10½"	36'-2½"	49'-6½"	5'-2½"

CORE END

EL END	TRUSS DESIGNATION	BEARING ANGLES MK	TYPE STEEL	CHORD SIZE	LENGTH	WE V	VERTICAL "ST" STRUT MK	TYPE STEEL	DIA	LENGTH	VERTICAL "ST" STRUT MK	TYPE STEEL	DIA.	LENGTH	END STIFFENER MK V1 TYPE STEEL	DIA.	LENGTH (2 REQ'D)	MK V2 TYPE STEEL	DIA	LENGTH	MK V4 TYPE STEEL	DIA	LENGTH	WEB "Wc" MK	TYPE STEEL	PCS	DIA	LENGTH	WEB "WT" MK	TYPE STEEL	PCS	DIA	LENGTH
	C32T10 5810	9v	A242	2"x1½"x.25" ⚠1	10"	2'-6½" ⚠2	—	—	— ⚠1	—	—	—	—	—	A242	.92"	4⅜" ⚠1	—	—	—	—	—	—	4	A242	1	.92"	3'-0½"	8	A242	1	.92"	2'-5¾" ⚠2

STEEL TRUSS DETAILS
FOR
WORLD TRADE CENTER - N.Y.C
FOR
THE PORT OF NEW YORK AUTHORITY

FLOOR TRUSS C32T10 58'-10" OVERALL
WORLD TRADE CENTER TOWERS , A-B

FABRICATION BY: LACLEDE STEEL COMPANY	
FABRICATED AT: MADISON, ILLINOIS	DESIGN DRAWING [illegible] PLATE [illegible]
APPROVED FOR FABRICATION BY JW FOR P.O.N.Y.A DATE 7/5/68	DRAWN BY: [illegible] DATE: FEB. 26, [illegible]
APPROVED FOR FABRICATION BY ____ FOR FABRICATOR DATE	CHECKED BY: [illegible] IN CHARGE OF DATE: FEB. [illegible]
DETAILED BY A. C. WEBER	FABRICATION W.T.C. 221 SHEET NO. ST210

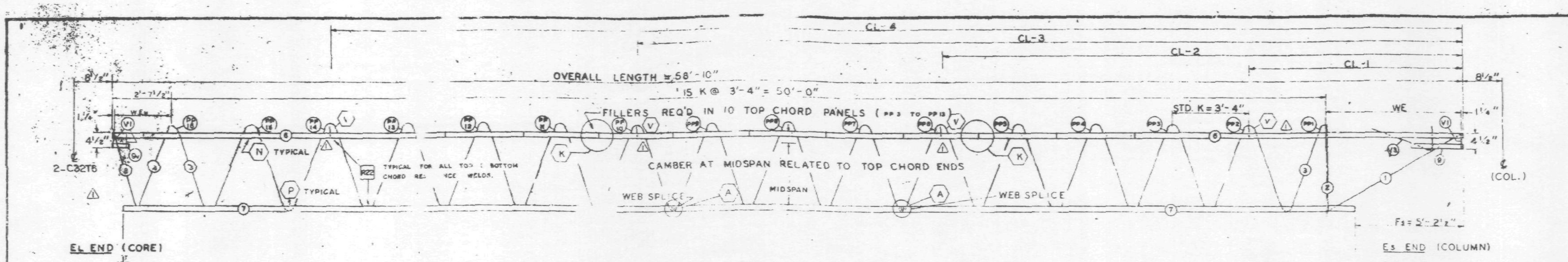

TRUSS ELEVATION

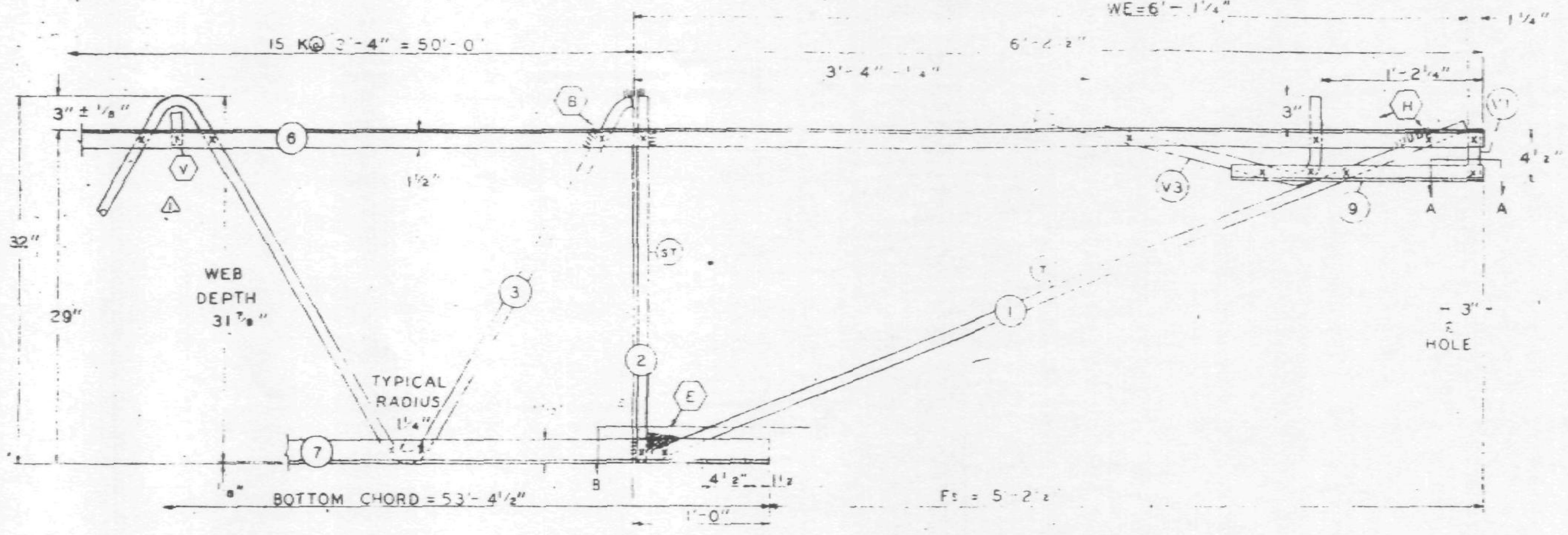

Es END (COLUMN)

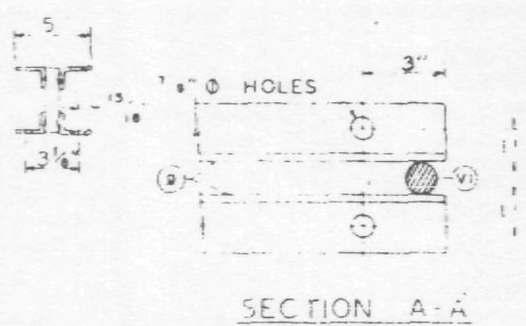

SECTION A-A

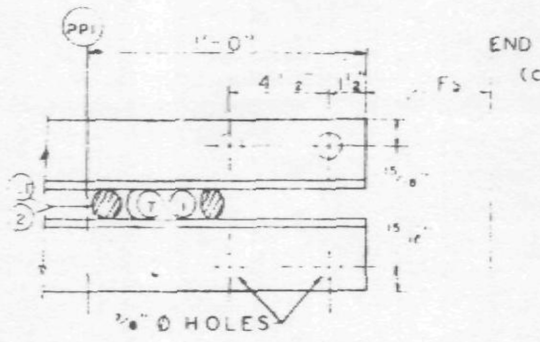

SECTION B-B

DAMPING UNIT CONNECTION PLATE ATTACHED TO BOTTOM CHORD (COL. END) IN FIELD. [illegible] BY CONTRACT WTC 223.00.

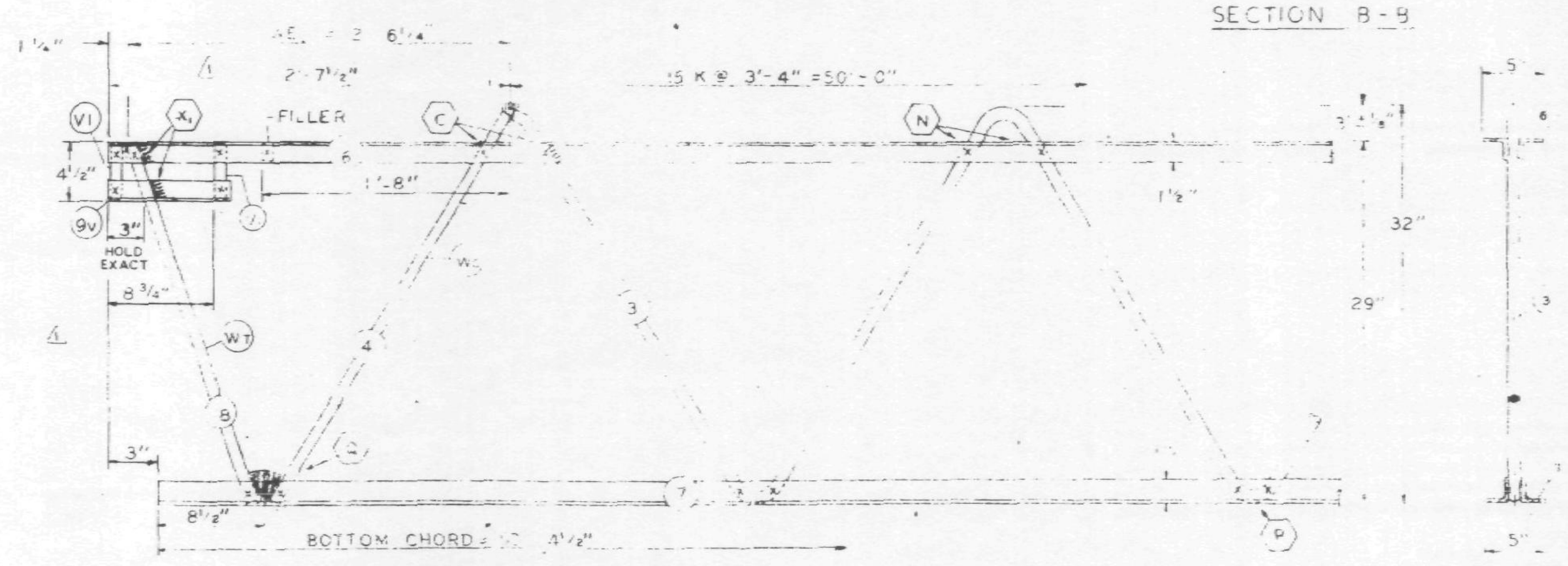

EL END (CORE)

ALL PANEL POINTS RESISTANCE WELDED (x)
ARC WELDS INDICATED AT SHADED AREAS
AND AT BOTTOM CHORD WEB SPLICES
⚠1 ALL WELD DETAILS SHOWN ON SHEETS ST290, ST291, AND ST292.
SEE SHEET ST295 FOR & V3 DETAILS.
LETTERS IN HEXAGON INDICATE WELD DETAIL, i.e., (A).
LETTERS AND NUMBERS IN SQUARES INDICATE RESISTANCE WELD STRENGTH IDENTIFIED IN THE QUALITY CONTROL PROGRAM, i.e., R22.

FABRICATION REQUIREMENTS	DESIGN	TOLERANCE
CAMBER AT MIDSPAN ⚠1	1 11/16"	± 3/8"
DESIGN DEPTH	29"	± 1/4"
PANEL "K"	[illegible]-4"	± [illegible]/4"
OVERALL LENGTH	[illegible]-10"	± 3/8"
WEB DEPTH	[illegible] 7/8"	[illegible] /4

NO.	DATE	REVISION	BY
1	5-27-68	AS NOTED	T.M.C.

REF. DRWG.

7-AB1-8	⚠1 5-10-68
7-AB1-52	2-15-68
7-AB4-50 & 50.2	10-20-67
7-AB5-2	1-3-68
7-AB4-50.5	10-20-67
7-AB1-53	4-1-68

PAINT
LACLEDE ELECTROCOAT
RED NO. 10001

TRUSS DESIGNATION	TOP CHORD TWO ANGLES				BOTTOM CHORD TWO ANGLES				MAIN WEB "W"					FILLER		"M" C/C HOLES	TRUSS DATA	CHORD PLATE			
	MK.	TYPE STEEL	CHORD SIZE	LENGTH	MK.	TYPE STEEL	CHORD SIZE	LENGTH	MK.	TYPE STEEL	DIA	LENGTH	NO. OF K	NO	DIA			MK	TYPE STEEL	SIZE	LENGTH
C32T10-5810	6	A242	2"x1½"x.25"	58'-10" ⚠1	7	A242	2"x1½"x.25"	53'-4½" ⚠1	3	A242	.92"	93'-5¼"	15@3'-4"=50'-0"	11	.92"	—		—	—	—	—

COLUMN END

Es END	TRUSS DESIGNATION	BEARING ANGLES				WE	DIAGONAL "T" STRUT				VERTICAL "ST" STRUT				END STIFFENER MK. V1			END STIFFENER MK. V3			DOUBLE STRUT			
		MK	TYPE STEEL	CHORD SIZE	LENGTH		MK	TYPE STEEL	DIA	LENGTH	MK	TYPE STEEL	DIA	LENGTH	TYPE STEEL	DIA	LENGTH	TYPE STEEL	DIA	LENGTH	MK	TYPE STEEL	DIA	LENGTH
	C32T10-5810	9	A242	2"x1½"x.25"	1'-10"	6'-1¼"	1	A242	.98"	6'-5"	2	A242	.92"	2'-7⅞"	A242	.98"	4[illegible]"	A242	.98"	2'-9½"	—	—	—	—

CHECK DIMENSION FOR TRUSS FAB. LOCATION OF TRANS. TRUSS				
CL-1	CL-2	CL-3	CL-4	Fs
9'-6½"	22'-10½"	36'-2½"	49'-6½"	5'-2½"

CORE END

EL END	TRUSS DESIGNATION	BEARING ANGLES				WEv	VERTICAL "STv" STRUT				VERTICAL "ST" STRUT				STIFFENER MK. V1			STIFFENER MK. V[illegible]			STIFFENER MK. V4			WEB "Wc"					WEB "WT"				
		MK	TYPE STEEL	CHORD SIZE	LENGTH		MK	TYPE STEEL	DIA	LENGTH	MK	TYPE STEEL	DIA	LENGTH	TYPE STEEL	DIA	LENGTH (2 REQ'D)	TYPE STEEL	DIA	LENGTH	TYPE STEEL	DIA	LENGTH	MK	TYPE STEEL	PCS	DIA	LENGTH	MK	TYPE STEEL	PCS	DIA	LENGTH
	C32T10-5810	9v	A242	2"x1½"x.25" ⚠1	10"	2'-6¾"	—	—	—	—		—	—		A242	.92"	4⅝" ⚠1	—	—	—	—	—	—	4	A242	1	.92"	3'-0½"	8	A242	1	.92"	2'-9"

STEEL TRUSS DETAILS
FOR
WORLD TRADE CENTER - N.Y.C.
FOR
THE PORT OF NEW YORK AUTHORITY

FLOOR TRUSS C32T10 58'-10" OVERALL
WORLD TRADE CENTER TOWERS A - B

FABRICATION BY: LACLEDE STEEL COMPANY

FABRICATED AT: MADISON, ILLINOIS		DESIGN DRAWING NO. 7-AB1-8 7-AB3-2	PLATE 1
APPROVED FOR FABRICATION BY JW FOR P.O.N.Y.A.	DATE 6/25/68	DRAWN BY: [illegible] DATE: FEB. 24, 1968	
APPROVED FOR FABRICATION BY FOR FABRICATOR	DATE	CHECKED BY: [illegible] DATE FEB. [illegible], 1968	IN CHARGE OF PROD. DEV.
DETAILED BY: A.C. WEBER		FABRICATION CONT. NO. W.T.C. 221	SHEET NO. ST210

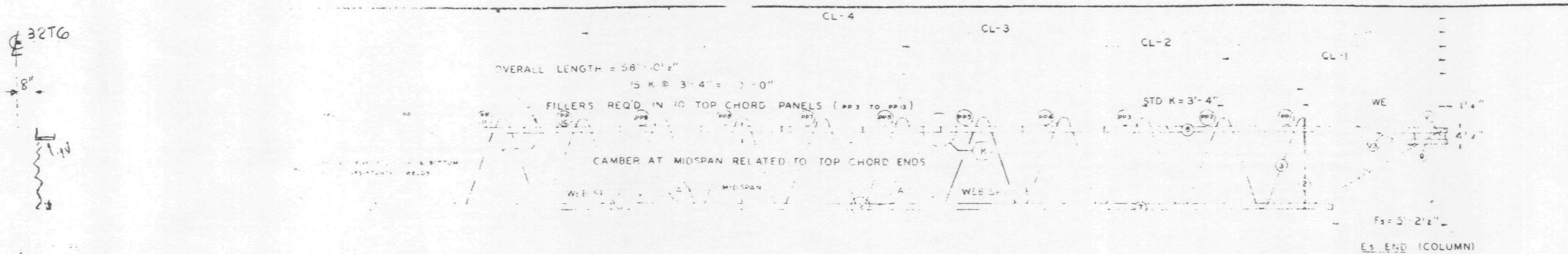

TRUSS ELEVATION

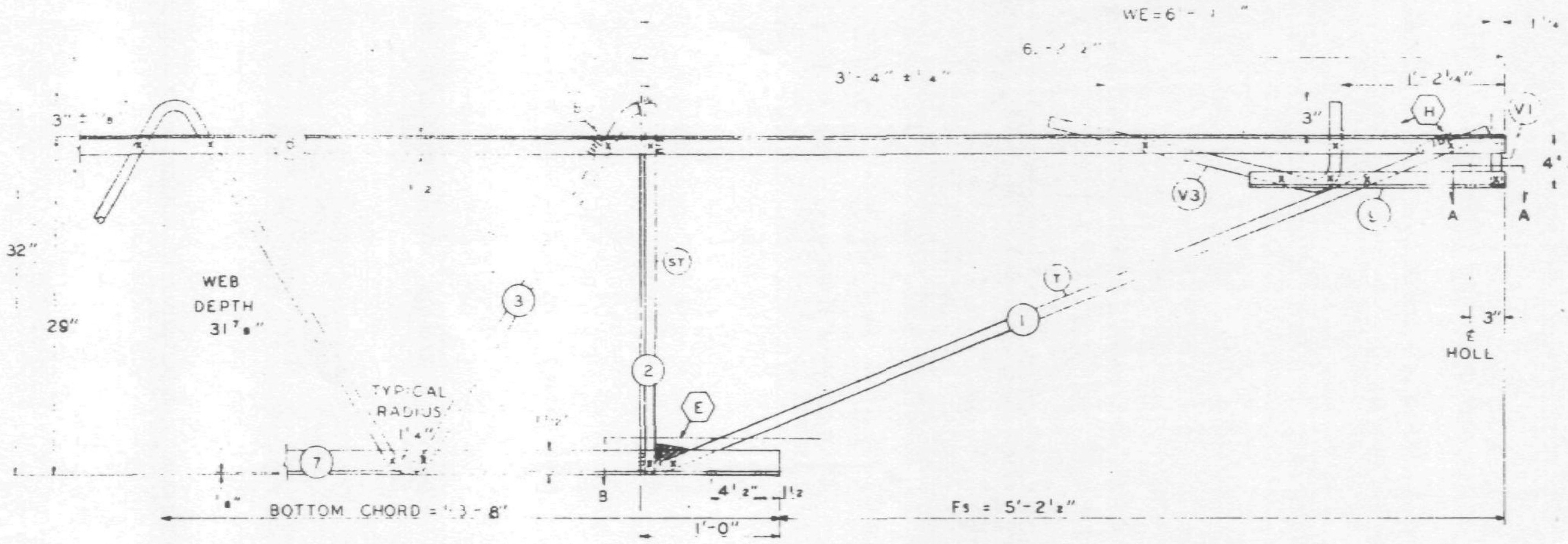

Es END (COLUMN)

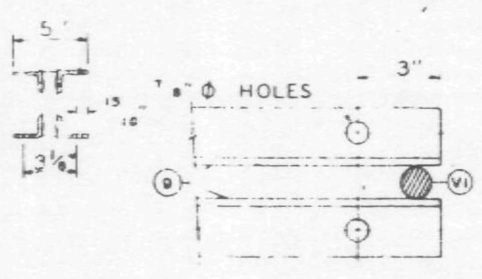

SECTION A-A

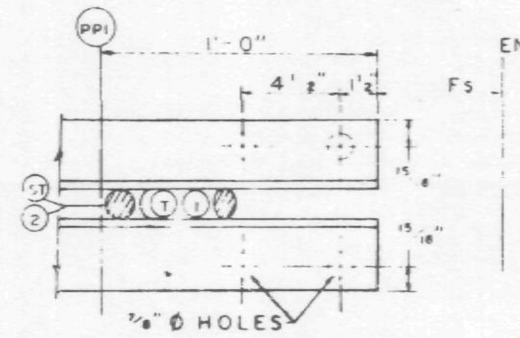

SECTION B-B

DAMPING UNIT CONNECTION PLATE ATTACHED TO BOTTOM CHORD (COL END) IN FIELD. ASSEMBLY BY CONTRACT WTC 223.00.

FABRICATION REQUIRMENTS	DESIGN	TOLERAN
CAMBER AT MIDSPAN	1"	± 3/8"
DESIGN DEPTH	29"	± 1/4"
PANEL "K"	3'-4	± 1/4"
OVERALL LENGTH	58'-10½"	± 3/8"
WEB DEPTH	31 7/8"	±

ALL PANEL POINTS RESISTANCE WELDED (x)
ARC WELDS INDICATED AT SHADED AREAS AND AT BOTTOM CHORD WEB SPLICES (▬)
ALL WELD DETAILS SHOWN ON SHEETS ST290 AND ST291.
SEE SHEET ST295 FOR V1 & V3 DETAILS.
LETTERS IN HEXAGON INDICATE WELD DETAIL, ie., (A).
LETTERS AND NUMBERS IN SQUARES INDICATE RESISTANCE WELD STRENGTH IDENTIFIED IN THE QUALITY CONTROL PROGRAM, ie., [R22].

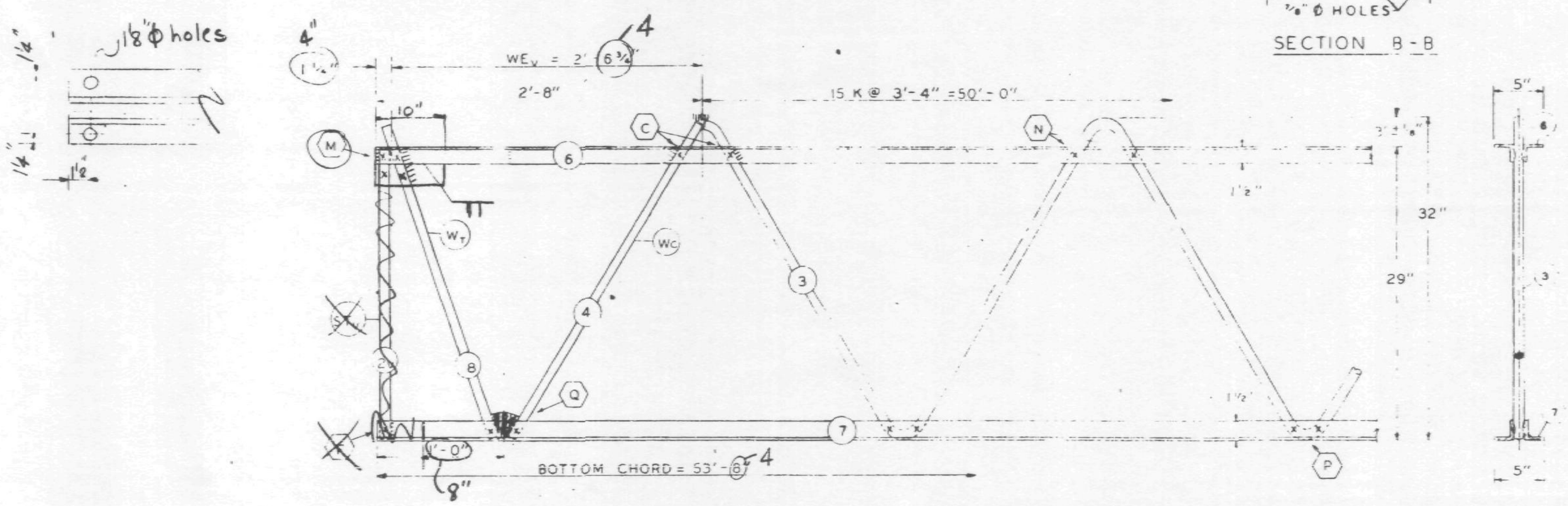

EL END (CORE)

REF. DRWG.

7-AB1-8	4-1-68
7-AB1-52	2-15-68
7-AB4-50 & 50.2	10-20-67
7-AB3-2	1-3-68
7-AB1-50.5	10-20-67
7-AB1-53	4-1-68

PAINT

LACLEDE ELECTROCOAT
RED NO. 10001

TRUSS DESIGNATION	TOP CHORD TWO ANGLES				BOTTOM CHORD TWO ANGLES				MAIN WEB "W"					FILLER		"M" C C HOLES	TRUSS DATA		CHORD PLATE			
	MK	TYPE STEEL	CHORD SIZE	LENGTH	MK	TYPE STEEL	CHORD SIZE	LENGTH	MK	TYPE STEEL	DIA	LENGTH	NO OF K	NO	DIA				MK	TYPE STEEL	SIZE	LENGTH
C32T10-5810.5	6	A242	2"x1½"x.25"	58'-10½"	7	A242	2"x1½"x.25"	53'-8"	3	A242	.92"	93'-5¼"	15@ 3'-4"=50'-0"	10	.92"	—			—	—	—	—

Es END TRUSS DESIGNATION	BEARING ANGLES				WE	DIAGONAL "T" STRUT				VERTICAL "ST" STRUT				END STIFFENER MK V1			END STIFFENER MK V3			DOUBLE STRUT			
	MK	TYPE STEEL	CHORD SIZE	LENGTH		MK	TYPE STEEL	DIA	LENGTH	MK	TYPE STEEL	DIA	LENGTH	TYPE STEEL	DIA	LENGTH	TYPE STEEL	DIA	LENGTH	MK	TYPE STEEL	DIA	LENGTH
C32T10-5810.5	9	A242	2"x1½"x.25"	1'-10"	6'-1¼"	1	A242	.98"	6'-5"	2	A242	.92"	2'-7⅜"	A242	.98"	4⅜"	A242	.98		—	—	—	—

CHECK DIMENSION FOR TRUSS FAB LOCATION OF TRANS TRUSS				
CL-1	CL-2	CL-3	CL-4	Fs
9'-6½"	22'-10½"	36'-2½"	49'-6½"	5'-2½"

EL END TRUSS DESIGNATION	BEARING ANGLES				WEv	VERTICAL "STv" STRUT				VERTICAL "ST" STRUT				END STIFFENER MK V1			END STIFFENER MK V2			END STIFFENER MK V4			WEB "Wc"					WEB "WT"				
	MK	TYPE STEEL	CHORD SIZE	LENGTH		MK	TYPE STEEL	DIA	LENGTH	MK	TYPE STEEL	DIA	LENGTH	TYPE STEEL	DIA	LENGTH	TYPE STEEL	DIA	LENGTH	TYPE STEEL	DIA	LENGTH	MK	TYPE STEEL	PCS	DIA	LENGTH	MK	TYPE STEEL	PCS	DIA	LENGTH
C32T10-5810.5	9V	A36	3x2x	0'-10"	2'-6¾"	2	A242	.92"	2'-4¼" (out)	-	-	—	-	—	—	—	—	—	—	—	—	—	4	A242	1	.92"	3'-5½"	8	A242	1	.92"	2'-9"

STEEL TRUSS DETAILS
FOR
WORLD TRADE CENTER - N.Y.C.
FOR
THE PORT OF NEW YORK AUTHORITY

FLOOR TRUSS C32T10 58'-10½" OVERALL

WORLD TRADE CENTER TOWERS A-B

FABRICATION BY: LACLEDE STEEL COMPANY

FABRICATED AT: MADISON, ILLINOIS		DESIGN DRAWING NO. 7-AB1-8 7-AB3-2 PLATE	
APPROVED FOR FABRICATION BY ___ FOR P.O.N.Y.A	DATE	DRAWN BY: ___ DATE FEB. 24, 1968	
APPROVED FOR FABRICATION BY ___ FOR FABRICATOR	DATE	CHECKED BY: J.R. PAUL DATE FEB. 24, 1968	IN CHARGE OF PROD. DEV
DETAILED BY A.C. WEBER		FABRICATION CONT. NO. WTC 221	SHEET NO ST210

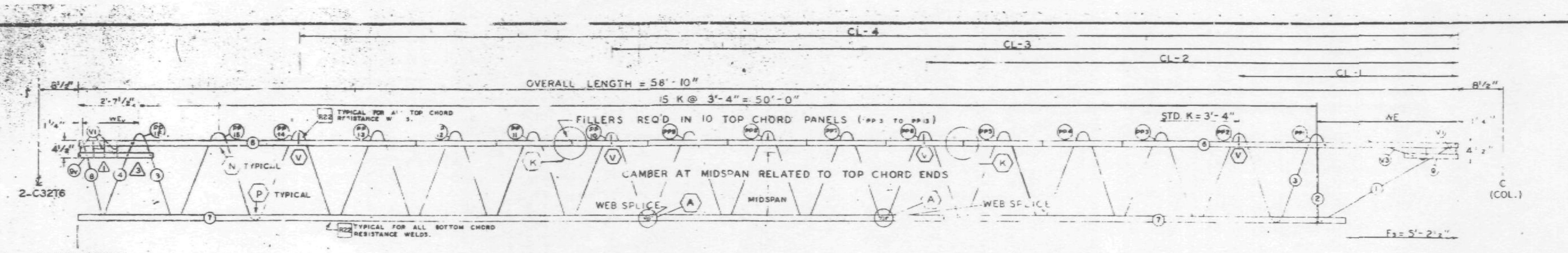

EL END (CORE)

Es END (COLUMN)

TRUSS ELEVATION

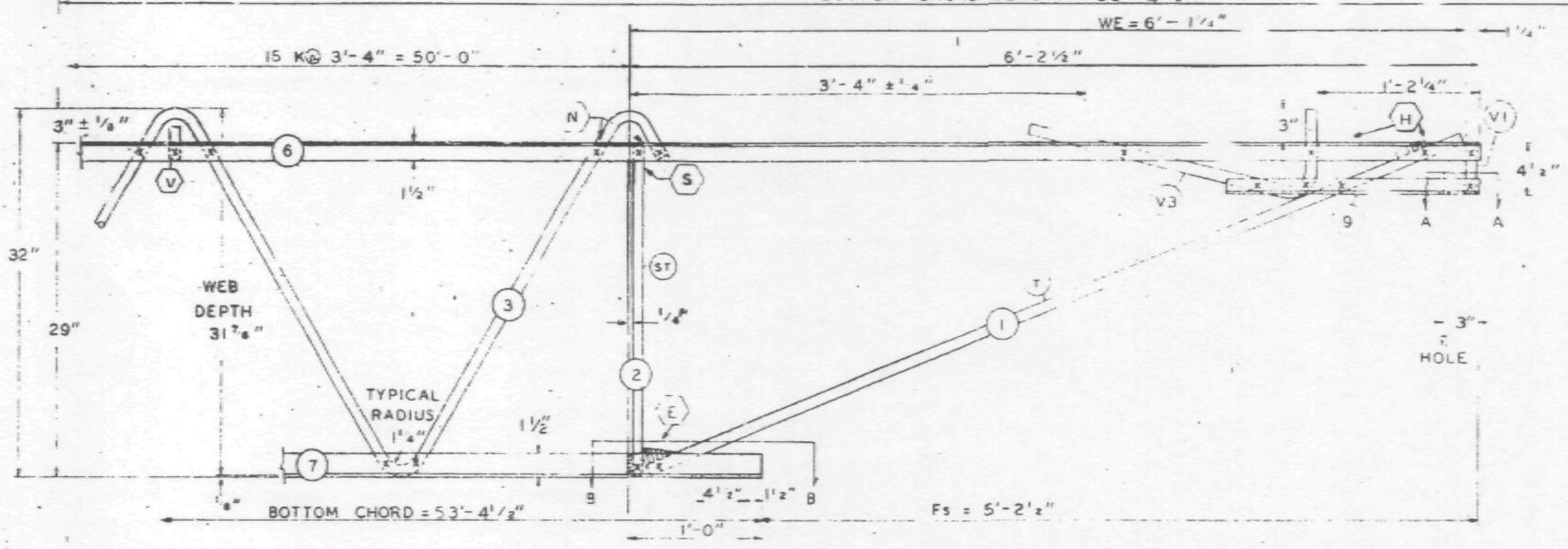

Es END (COLUMN)

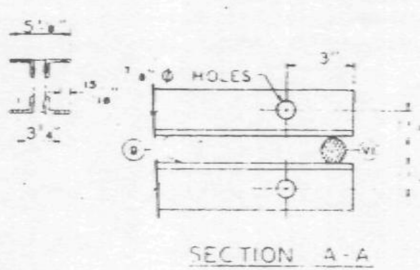

SECTION A-A

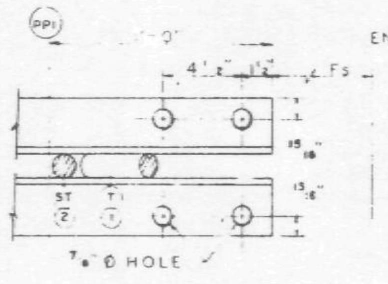

SECTION B-B

DAMPING UNIT CONNECTION
PLATE ATTACHED TO BOTTOM
CHORD (COL END) IN FIELD
ASSEMBLY BY [illegible]

ALL PANEL POINTS RESISTANCE WELDED (A)
ARC WELDS INDICATED [illegible] DED AREAS
AND AT BOTTOM CHORD WEB SPLICES
ALL WELD [illegible] SHOWN [illegible] SHEETS ST290, ST291,
AND ST292
SEE SHEET ST295 FOR V1 & V3 DETAILS.
LETTERS IN HEXAGON INDICATE WELD DETAIL, ie., (A).
LETTERS AND NUMBERS IN SQUARES INDICATE RE-
SISTANCE WELD STRENGTH IDENTIFIED IN THE
QUALITY CONTROL PROGRAM, ie., R22.

FABRICATION REQUIREMENTS	DESIGN	TOLERANCE
CAMBER AT MIDSPAN	1 5/16"	± 3/8"
DESIGN DEPTH	29"	± 1/4
PANEL "K"	3'-4"	± 1/4"
OVERALL LENGTH	58'-10"	0"
WEB DEPTH	31 7/8"	1/4"

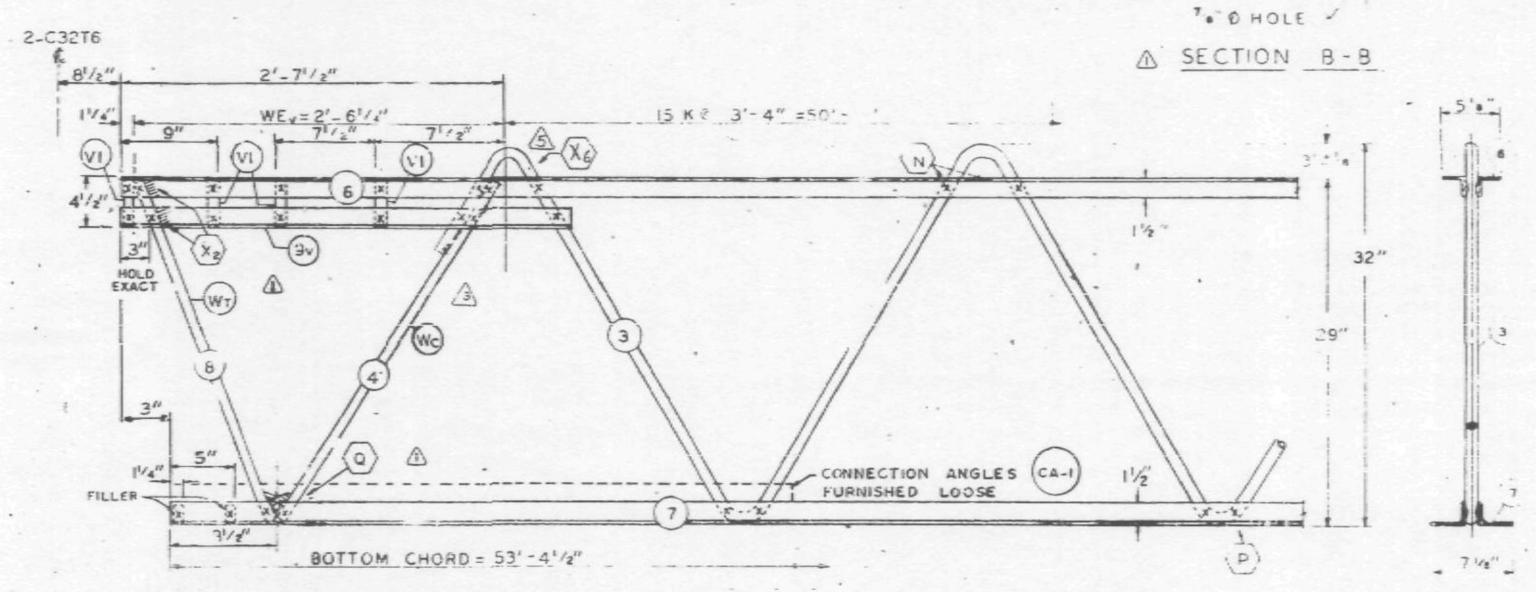

EL END (CORE)

NO.	DATE	REVISION	BY
5	5-13-70	AS NOTED	G.D.C.
4	5-8-70	AS NOTED	G.D.C.
3	5-1-70	AS NOTED	G.D.C.
2	12-3-68	GENERAL	G.D.C.
1	7-1-68	AS NOTED	I.M.C.

REF. DRWG.

7-AB1-9	7-22-68
7-AB1-52	2-15-68
7-AB4-50	8-1-68
7-AB3-2	1-3-68
7-AB4-50.5	10-20-67
7-AB1-53	7-22-68

PAINT
LACLEDE ELECTROCOAT
RED NO. 10001

TRUSS DESIGNATION	TOP CHORD TWO ANGLES				BOTTOM CHORD TWO ANGLES				MAIN WEB "W" (5)					FILLER		"M" C/C HOLES	CONNECTION FILLERS			CHORD PLATE			
	MK	TYPE STEEL	CHORD SIZE	LENGTH	MK	TYPE STEEL	CHORD SIZE	LENGTH	MK	TYPE STEEL	DIA	LENGTH	NO. OF K	NO	DIA		NO.	DIA	LENGTH	MK	TYPE STEEL	SIZE	LENGTH
C32T11-5810	6	A242	2"x1½"x.25"	58'-10"	7	A242	2"x1½"x.25	53'-4½"	3	A242	.92	94'-4¾"	15 @ 3'-4"=50'-0"	12	.92 (1)	—	4	.92	3"	–	—	—	—

COLUMN END

Es END	TRUSS DESIGNATION	BEARING ANGLES				WE	DIAGONAL "T" STRUT				VERTICAL "ST" STRUT				END STIFFENER MK V1			END STIFFENER MK V3			DOUBLE STRUT			
		MK	TYPE STEEL	CHORD SIZE	LENGTH		MK	TYPE STEEL	DIA	LENGTH	MK	TYPE STEEL	DIA	LENGTH	TYPE STEEL	DIA	LENGTH	TYPE STEEL	DIA	LENGTH	MK	TYPE STEEL	DIA	LENGTH
	C32T11-5810	9	A242	2"x1½"x.25"	1'-10"	6'-1¼"	1	A242	.92	6'-5"	2	A242	.92	2'-4⅞"	A242	.92	4⅜"	A242	.92	2'-9½"	–	—	—	—

CHECK DIMENSION FOR TRUSS FAB
LOCATION OF TRANS. TRUSS

CL-1	CL-2	CL-3	CL-4	Fs
9'-6½"	22'-10½"	36'-2½"	49'-6½"	5'-2½"

CORE END

EL-END	TRUSS DESIGNATION	BEARING ANGLES				WEv	VERTICAL "STv" STRUT				VERTICAL "ST" STRUT				END STIFFENER MK V1			END STIFFENER MK V2			END STIFFENER MK V4			WEB "Wc" (3)					WEB "WT"					CONNECTION ANGLES (2 REQ'D) FURNISHED LOOSE				
		MK	TYPE STEEL	CHORD SIZE	LENGTH		MK	TYPE STEEL	DIA	LENGTH	MK	TYPE STEEL	DIA	LENGTH	TYPE STEEL	DIA	LENGTH	TYPE STEEL	DIA	LENGTH	TYPE STEEL	DIA	LENGTH	MK	TYPE STEEL	PCS	DIA	LENGTH	MK	TYPE STEEL	PCS	DIA	LENGTH	NO	MK	TYPE STEEL	ANGLE SIZE	LENGTH
	C32T11-5810	9v	A242	2"x1½"x.31" (1)	3'-2"	2'-6¼"	-	—	—	—	—	—	—	—	A242	.92 (1)	4⅜"	–	—	—	—	—	—	4	A242	1	.92	2'-10"	8	A242	1	.92	2'-5¾"	2	CA-1	A242	2"x1½"x.31 (?)	4'-4"

STEEL TRUSS DETAILS
FOR
WORLD TRADE CENTER - N.Y.C.
FOR
THE PORT OF NEW YORK AUTHORITY

FLOOR TRUSS C32T11 58'-10" OVERALL
WORLD TRADE CENTER TOWERS A-B

FABRICATION BY: LACLEDE STEEL COMPANY
FABRICATED AT: MADISON, ILLINOIS
DESIGN DRAWING NO. 7-AB1-9 7-AB3-2 PLATE
APPROVED FOR FABRICATION BY FOR P.O.N.Y.A. DATE 5/19/70
DRAWN BY: L.S. DATE: MAY 27, 1968
APPROVED FOR FABRICATION BY FOR FABRICATOR DATE
CHECKED BY: J.R. BAIN DATE: MAY 27, 1968
IN CHARGE OF PROD. DEV.
DETAILED BY: H. C. WEBER
FABRICATION CONT. NO. W.T.C. 221
SHEET NO. ST211

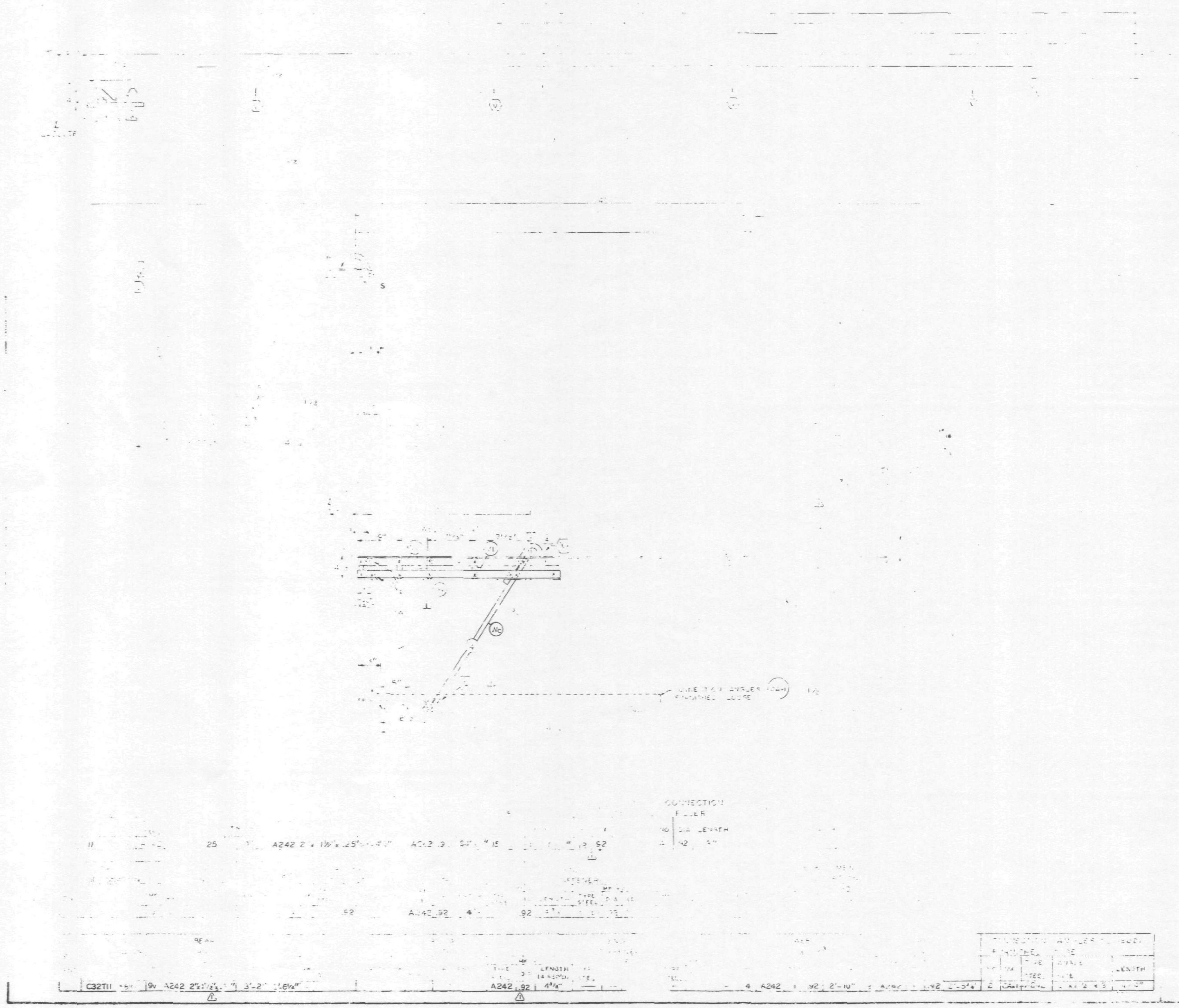

NO.	DATE	REVISION	BY
3	[illegible]-70	AS NOTED	G.D.C.
2	12-3-68	GENERAL	G.D.C.
1	[illegible]	AS NOTED	T.M.C.

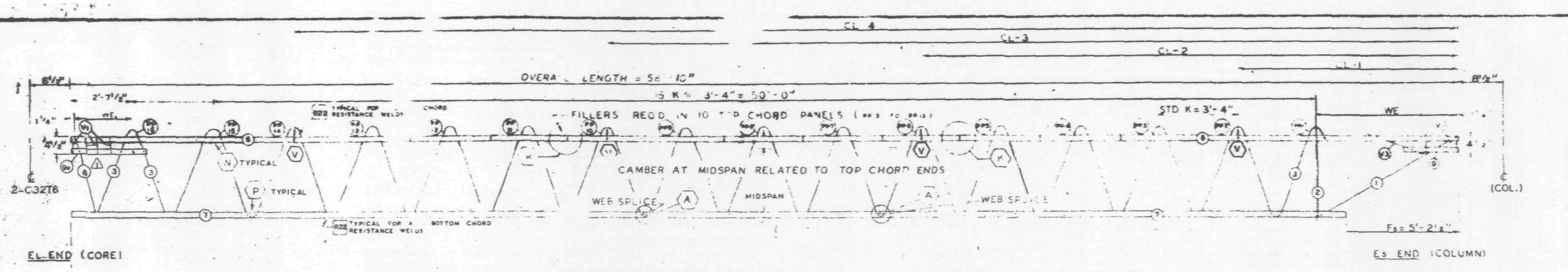

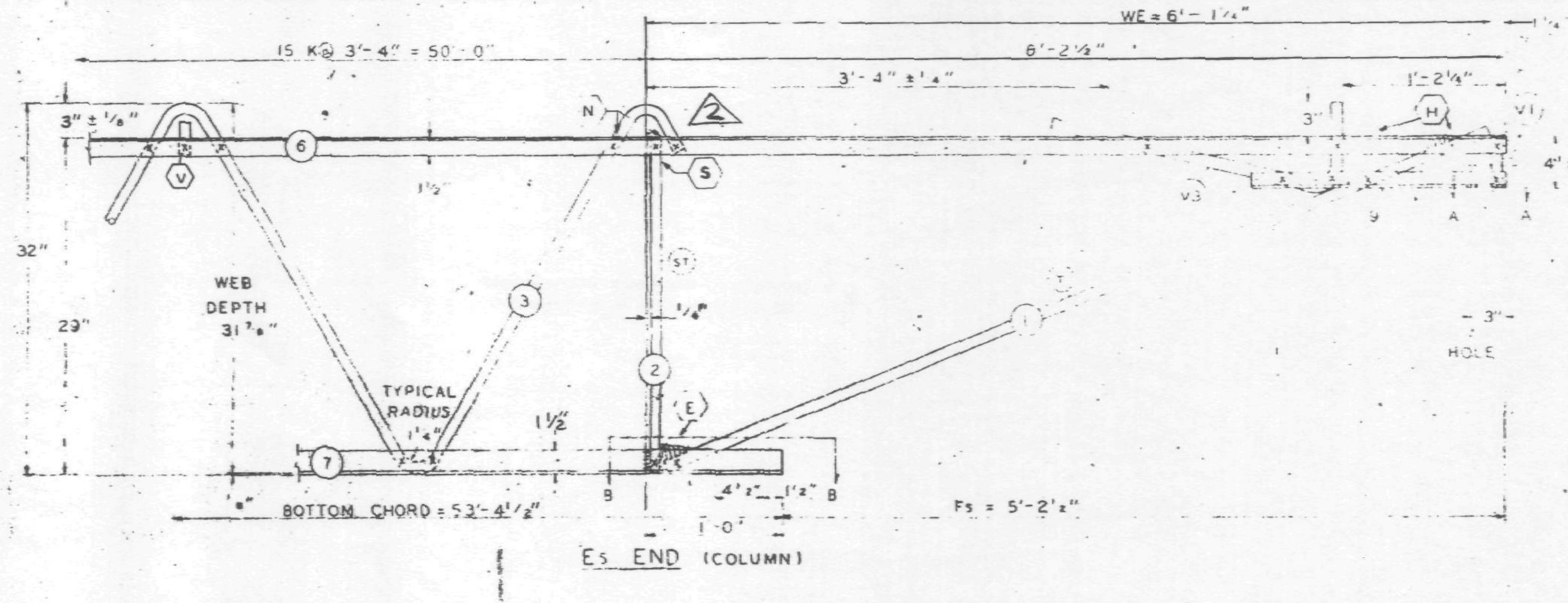

TRUSS ELEVATION

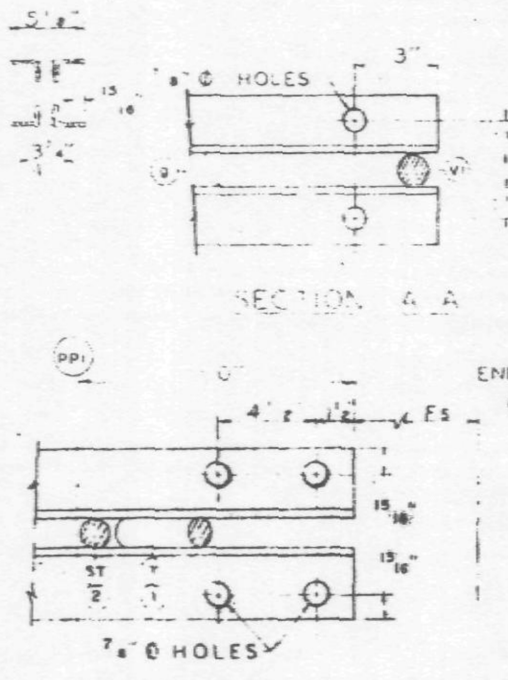

DAMPING UNIT CONNECTION PLATE ATTACHED TO BOTTOM CHORD (COL END) IN FIELD ASSEMBLY BY

ALL PANEL POINTS RESISTANCE WELDED (x)
ARC WELDS INDICATED AT SHADED AREAS
AND AT BOTTOM CHORD WEB SPLICES ( )
ALL WELD DETAILS SHOWN ON SHEETS ST290, ST291,
AND ST292.
SEE SHEET ST295 FOR V1 & V3 DETAILS.
LETTERS IN HEXAGON INDICATE WELD DETAIL, i.e., (A).
LETTERS AND NUMBERS IN SQUARES INDICATE RESISTANCE WELD STRENGTH IDENTIFIED IN THE QUALITY CONTROL PROGRAM, i.e., R22.

FABRICATION REQUIRMENTS

	DESIGN	TOLERANCE
CAMBER AT MIDSPAN	1 5/16"	± 3/8"
DESIGN DEPTH	29"	± 4"
PANEL "K"	3'-4"	± 4"
OVERALL LENGTH	58'	± 3/8"
WEB DEPTH	3	± 1/4"

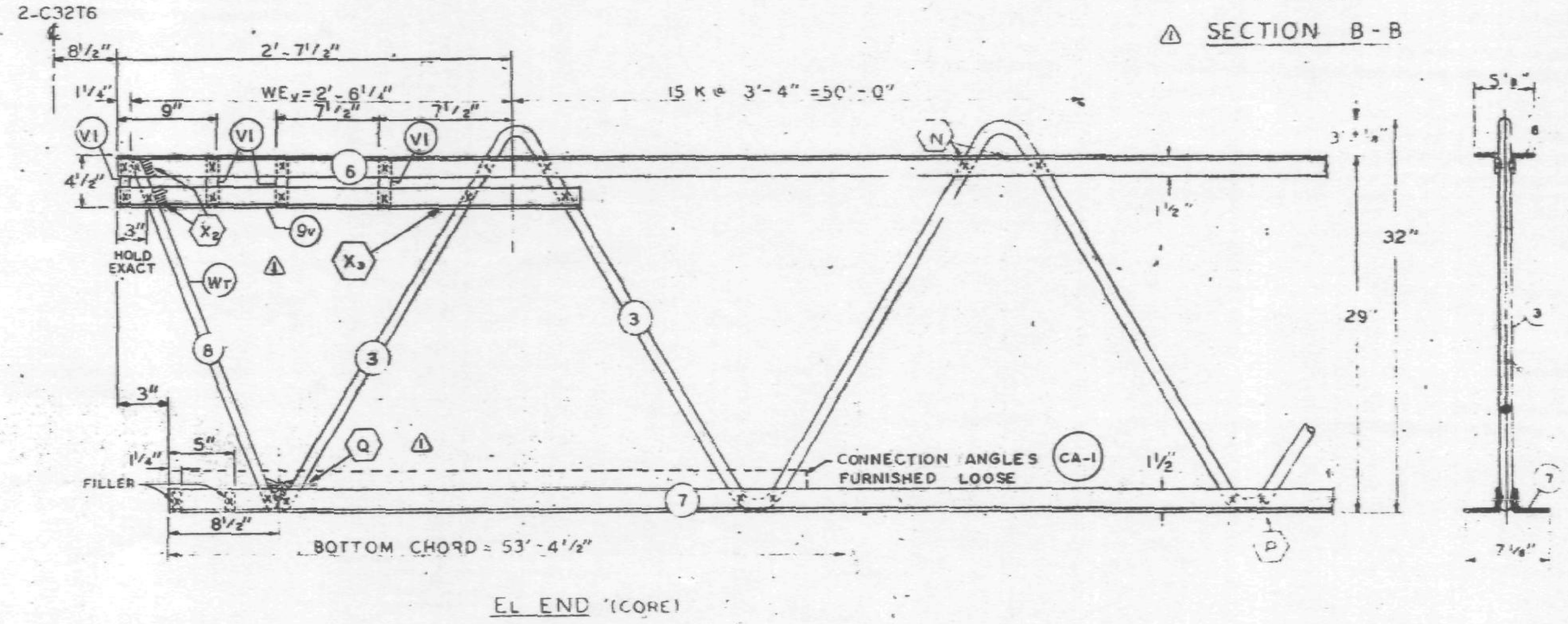

NO.	DATE	REVISION	BY
2	12-3-68	GENERAL	G.D.C.
1	7-1-68	AS NOTED	T.M.G.

REF. DRWG.

7-AB1-9	7-22-68
7-AB1-52	2-3-68
7-AB4-50	8-1-68
7-AB3-2	1-3-68
7-AB4-50.5	10-20-67
7-AB1-53	7-22-68
	7-22-68

PAINT

LACLEDE ELECTROCOAT
RED NO. 10001

TRUSS DESIGNATION	TOP CHORD TWO ANGLES				BOTTOM CHORD TWO ANGLES				MAIN WEB "W"					FILLER		"M" c-c HOLES	CONNECTION FILLERS			CHORD PLATE			
	MK.	TYPE STEEL	CHORD SIZE	LENGTH	MK.	TYPE STEEL	CHORD SIZE	LENGTH	MK	TYPE STEEL	DIA	LENGTH	NO OF K	NO	DIA		NO.	DIA	LENGTH	MK	TYPE STEEL	SIZE	LENGTH
C32T11-5810	6	A242	2"x1½"x.25"	58'-10"	7	A242	2"x 1½"x .25	53'-4½"	3	A242	.92	97'-0"	15½ @ 3'-4" = 51'-8"	12	.92	——	4	.92	3"	–	——	——	——

COLUMN END

Es END	TRUSS DESIGNATION	BEARING ANGLES				WE	DIAGONAL "T" STRUT				VERTICAL "ST" STRUT				END STIFFENER MK. V1			END STIFFENER MK. V3			DOUBLE STRUT			
		MK	TYPE STEEL	CHORD SIZE	LENGTH		MK	TYPE STEEL	DIA	LENGTH	MK.	TYPE STEEL	DIA.	LENGTH	TYPE STEEL	DIA	LENGTH	TYPE STEEL	DIA	LENGTH	MK.	TYPE STEEL	DIA	LENGTH
	C32T11-5810	9	A242	2"x1½"x.25"	1'-10"	6'-1¼"	1	A242	.92	6'-5"	2	A242	.92	2'-4⅞"	A242	.92	4⅜"	A242	.92	2'-9½"	–	——	—	——

CHECK DIMENSION FOR TRUSS FAB
LOCATION OF TRANS. TRUSS

CL-1	CL-2	CL-3	CL-4	Fs
9'-6½"	22'-10½"	36'-2½"	49'-6½"	5'-2½"

CORE END

EL END	TRUSS DESIGNATION	BEARING ANGLES				WEv	VERTICAL "ST1" STRUT				VERTICAL "ST" STRUT				STIFFENER MK. V1			STIFFENER MK. V2			STIFFENER MK. V4			WEB "Wc"					WEB "WT"					CONNECTION ANGLES (2 REQ'D) FURNISHED LOOSE				
		MK.	TYPE STEEL	CHORD SIZE	LENGTH		MK.	TYPE STEEL	DIA	LENGTH	MK.	TYPE STEEL	DIA.	LENGTH	TYPE STEEL	DIA	LENGTH (4 REQ'D)	TYPE STEEL	DIA	LENGTH	TYPE STEEL	DIA	LENGTH	MK	TYPE STEEL	PCS	DIA	LENGTH	MK.	TYPE STEEL	PCS	DIA.	LENGTH	NO	MK.	TYPE STEEL	ANGLE SIZE	LENGTH
	C32T11-5810	9v	A242	2"x1½"x.31"	3'-2"	2'-6¼"	-	—	-	- -	-	——	—		A242	.92	4⅜"	——	—	—	——	—	——	-	——	—	—	——	8	A242	1	.92	2'-5¾"	2	CA-1	A242	2"x1½" x 31	4'-4"

STEEL TRUSS DETAILS
FOR
WORLD TRADE CENTER - N.Y.C.
FOR
THE PORT OF NEW YORK AUTHORITY

FLOOR TRUSS C32T11 58'-10" OVERALL
WORLD TRADE CENTER TOWERS A-B

FABRICATION BY: LACLEDE STEEL COMPANY		
FABRICATED AT: MADISON, ILLINOIS	DESIGN DRAWING NO. 7-AB1-9 7-AB3-2 PLATE	
APPROVED FOR FABRICATION FOR P.O.N.Y.A DATE 12/9/68	DRAWN BY: L.S. DATE: MAY 27, 1968	
APPROVED FOR FABRICATION BY FOR FABRICATOR DATE	CHECKED BY J.B. BAUA DATE MAY 27, 1968	IN CHARGE OF PROD. DE.
LACLEDE STEEL CO.	FABRICATION CONT. NO. WTC 221	SHEET NO. ST211

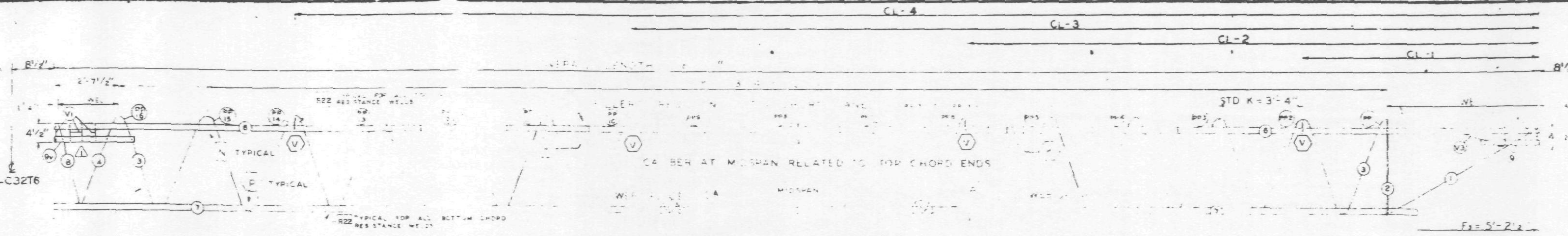

EL END (CORE)

Es END (COLUMN)

TRUSS ELEVATION

FABRICATION REQUIRMENTS	DESIGN	TOLERANCE
CAMBER AT MIDSPAN	5/16	3/8
DESIGN DEPTH	29"	4
PANEL "K"	3'-4	
OVERALL LENGTH		8"
WEB DEPTH	31	4"

ALL PANEL POINTS RESISTANCE WELDED (X)
ARC WELDS INDICATED AT SHADED AREAS
AND AT BOTTOM CHORD WEB SPLICES (▬)
ALL ARC ... SHOWN ON SHEETS ST290, ST291,
AND ST292
SEE SHEET ... FOR ... DETAILS
LETTERS IN HEXAGON INDICATE WELD DETAIL, i.e., (A).
LETTERS AND NUMBERS IN SQUARES INDICATE RESISTANCE WELD STRENGTH IDENTIFIED IN THE QUALITY CONTROL PROGRAM, i.e., R22

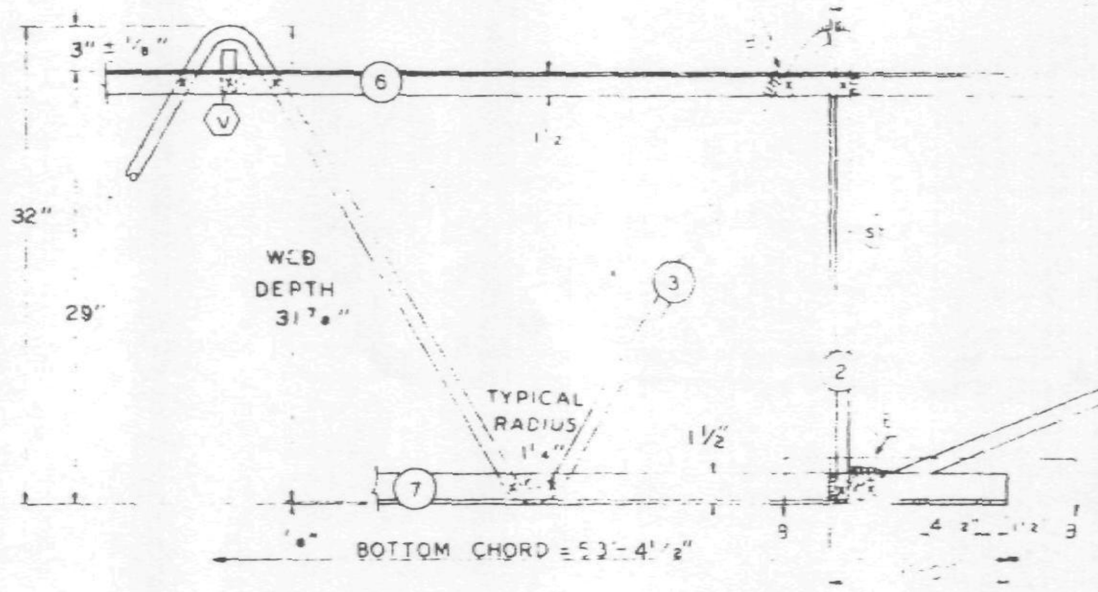

Es END (COLUMN)

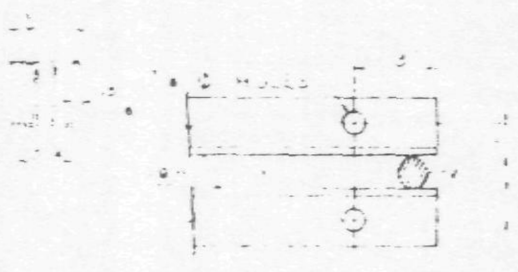

SECTION A-A

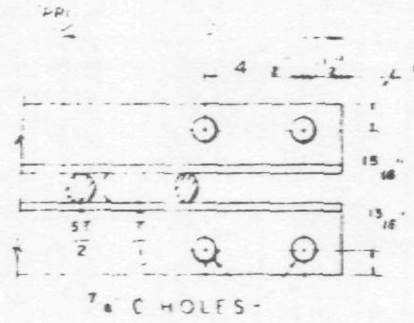

SECTION B-B

DAMPING UNIT CONNECTION PLATE ATTACHED TO BOTTOM CHORD (COL END) IN FIELD ASSEMBLY BY

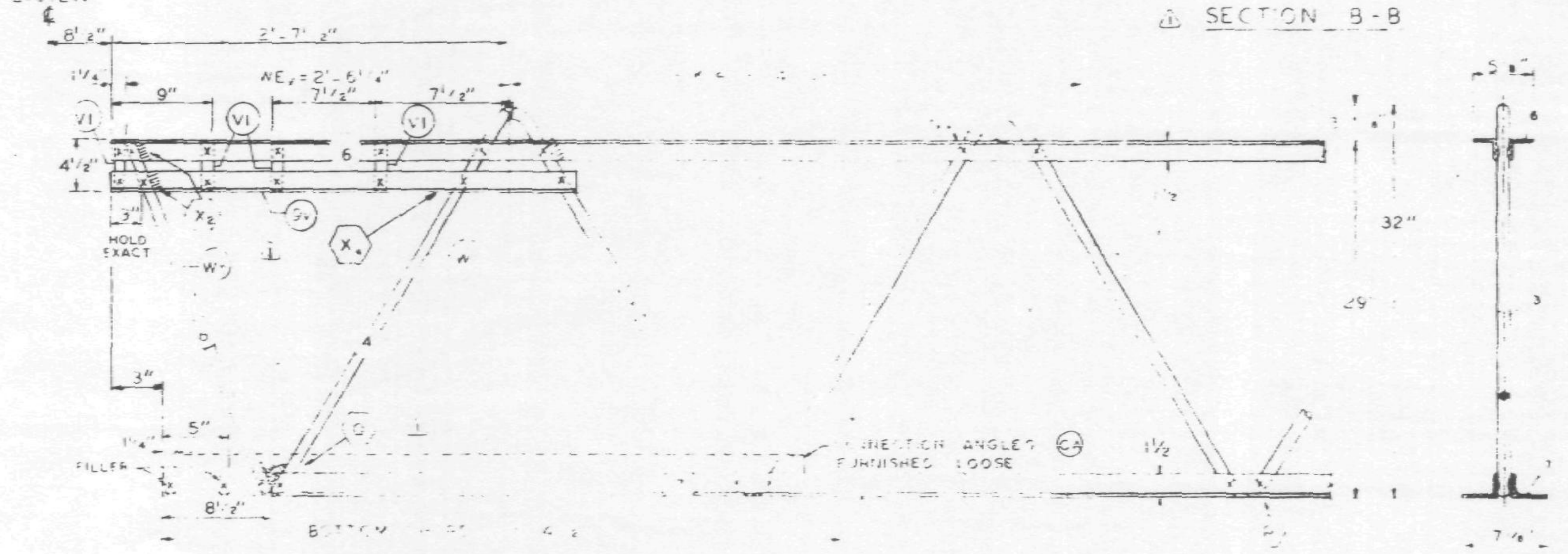

NO.	DATE	REVISION	BY
1	7-1-68	AS NOTED	T.M.C.

REF. DRWG.

7-ABI-9	4-1-68
7-ABI-22	5-15-68
7-AB4-50 & 50.2	10-20-67
7-ABI-2	1-3-68
7-AB4-50.5	10-20-67
7-ABI-53	4-1-68

PAINT
LACLEDE ELECTROCOAT
RED NO. 10001

TRUSS DESIGNATION	TOP CHORD TWO ANGLES				BOTTOM CHORD TWO ANGLES				MAIN WEB					FILLERS		CONNECTION FILLERS				HEEL PLATE		
	MK.	TYPE STEEL	CHORD SIZE	LENGTH	MK.	TYPE STEEL	CHORD SIZE	LENGTH	MK.	TYPE STEEL	DIA	LENGTH	NO. OF	NO.	DIA	NO.	DIA	LENGTH	MK.	TYPE STEEL	SIZE	LENGTH
C32T11-5810	6	A242	2"x1½"x.25"	58'-10"	7	A242	2"x1½"x.25"	53'-4½"	3	A242	.92		4	2	.92	4	.92					

COLUMN END

Es END	TRUSS DESIGNATION	BEARING ANGLES				WE	DIAGONAL "T" STRUT				VERTICAL "ST" STRUT				STIFFENER MK V1			STIFFENER MK V3			DOUBLE STRUT			
		MK.	TYPE STEEL	CHORD SIZE	LENGTH		MK.	TYPE STEEL	DIA	LENGTH	MK.	TYPE STEEL	DIA	LENGTH	TYPE STEEL	DIA	LENGTH	TYPE STEEL	DIA	LENGTH	MK.	TYPE STEEL	DIA	LENGTH
	C32T11-5810	9	A242	2"x1½"x.25"	1'-10"	6'-1¼"	1	A242	.92	6'-5"	2	A242	.92	2'-7⅞"	A242	.92	4⅜"	A242	.92	2'-9½"	—	—	—	—

CHECK DIMENSION FOR TRUSS FAB LOCATION OF TRANS TRUSS				
CL-1	CL-2	CL-3	CL-4	Fs
9'-6½"	22'-10½"	36'-2½"	49'-6½"	5'-2½"

CORE END

EL END	TRUSS DESIGNATION	BEARING ANGLES				WEv	VERTICAL "ST₁" ST-UT				VERTICAL "ST" STRUT				END STIFFENER MK V1			END STIFFENER MK V2			END STIFFENER MK V4			WEB "Wc"					WEB "WT"					CONNECTION ANGLES (2 REQ'D) FURNISHED LOOSE				
		MK.	TYPE STEEL	CHORD SIZE	LENGTH		MK.	TYPE STEEL	DIA	LENGTH	MK.	TYPE STEEL	DIA	LENGTH	TYPE STEEL	DIA	LENGTH (4 REQ'D)	TYPE STEEL	DIA	LENGTH	TYPE STEEL	DIA	LENGTH	MK.	TYPE STEEL	PCS	DIA	LENGTH	MK.	TYPE STEEL	PCS	DIA	LENGTH	NO	MK.	TYPE STEEL	ANGLE SIZE	LENGTH
	C32T11-5810	9v	A242	2"x1½"x.31" (1)	3'-2"	2'-6¼"	-	—	—	—	-	—	—	—	A242 (1)	.92	4⅜"	—	—	—	—	—	—	4	A242	1	.92	3'-0½"	8	A242	1	.92	2'-5¾"	2	CA	A242	2"x1½"x.31	4'-4"

STEEL TRUSS DETAILS
FOR
WORLD TRADE CENTER - N.Y.C.
FOR
THE PORT OF NEW YORK AUTHORITY

FLOOR TRUSS C32T11 58'-10" OVERALL
WORLD TRADE CENTER TOWERS A-B

FABRICATION BY LACLEDE STEEL COMPANY			
FABRICATED AT MADISON, ILLINOIS		DESIGN DRAWING NO 7-ABI-9 7-AB2-2	PLATE
APPROVED FOR FABRICATION BY JW FOR PONYA	DATE 7/9/68	DRAWN BY L.S. DATE MAY 27, 1968	
APPROVED FOR FABRICATION BY FOR FABRICATOR	DATE	CHECKED BY J.R. PAUL DATE MAY 27, 1968	IN CHARGE OF PROD. DEV.
DETAILED BY A.C. WEBER		FABRICATION CONT. NO. WTC 221	SHEET NO. ST211

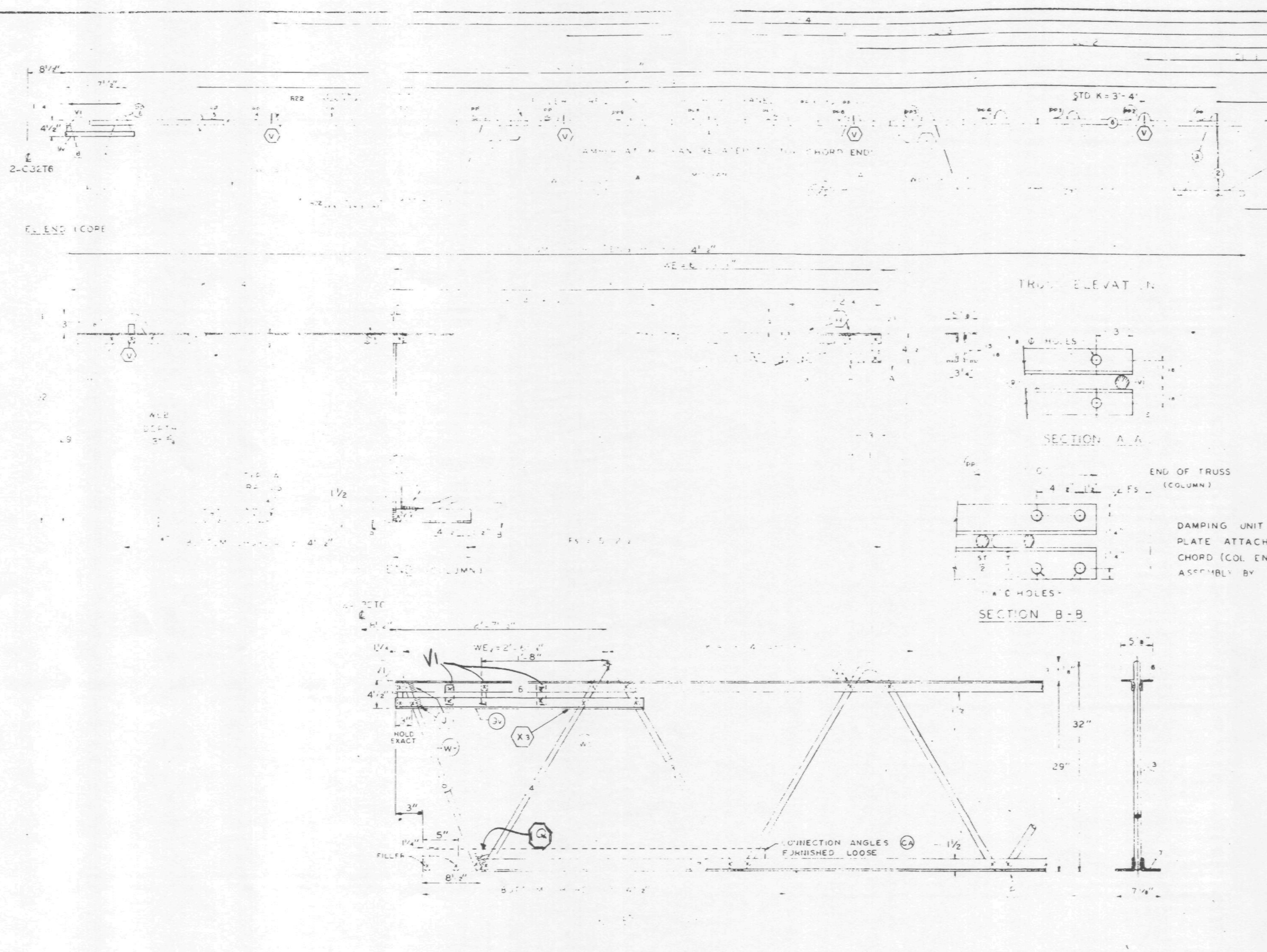

FABRICATION REQUIRMENTS

	DESIGN	TOLERANCE
CAMBER AT MIDSPAN	1 5/16"	± 3 8
DESIGN DEPTH	29"	± 4
PANEL "K"	3'-4"	± 4
OVERALL LENGTH	58'	± 3 8"
WEB DEPTH	8"	± [illegible]

ALL PANEL POINTS RESISTANCE WELDED (x)
ARC WELDS INDICATED AT SHADED AREAS
AND AT BOTTOM CHORD WEB SPLICES ( )
ALL WELD DETAILS SHOWN ON SHEETS ST290, ST291, AND ST292.
SEE SHEET ST295 FOR [illegible] & [illegible] DETAILS.
LETTERS IN HEXAGON INDICATE WELD DETAIL, ie., A.
LETTERS AND NUMBERS IN SQUARES INDICATE RESISTANCE WELD STRENGTH IDENTIFIED IN THE QUALITY CONTROL PROGRAM, ie., R22.

REF. DRWG.

7-ABI-9	[illegible]
7-ABI-52	[illegible]
7-AB4-50 & 50 2	[illegible]
7-AB3-4	[illegible]
7-AB4-50.5	[illegible]
7-ABI-53	4-1-68

PAINT

LACLEDE ELECTROCOAT
RED NO. 10001

TRUSS DESIGNATION	TOP CHORD TWO ANGLES MK	TYPE STEEL	SIZE	LENGTH	BOTTOM CHORD TWO ANGLES MK	TYPE STEEL	SIZE	LENGTH	MAIN WEB MK	TYPE STEEL	DIA	LENGTH	[illegible]	[illegible]	[illegible]	CONNECTION FILLERS NO	DIA	LENGTH	H-PLATE MK	TYPE STEEL	SIZE	LENGTH
C32T11 58'-10"	6	A242	[illegible] .25	[illegible] 1"	[illegible]	A242	2"x 1½"x .25"	5'-4½"	[illegible]	A242	.92	[illegible] 4	13 (12)	.92		4	.92	3"				

COLUMN END

Es END TRUSS DESIGNATION	BEARING ANGLES MK	TYPE STEEL	CHORD SIZE	LENGTH	WE	DIAGONAL ST STRUT MK	TYPE STEEL	DIA	LENGTH	VERTICAL ST STRUT MK	TYPE STEEL	DIA	LENGTH	STIFFENER MK	TYPE STEEL	DIA	LENGTH	MK V3 TYPE STEEL	DIA	LENGTH	MK	TYPE STEEL	DIA	LENGTH
C32T11 [illegible]	9	A[illegible]	[illegible]	[illegible]	5[illegible]	[illegible]	[illegible]	.92	[illegible]	4	A242	.92	2'-7⅞"	[illegible]	[illegible]	.92	4¾"	A242	.92	2'-9[illegible]				

CHECK DIMENSION FOR TRUSS FAB
LOCATION OF TRANS TRUSS

CL-1	CL-2	CL-3	CL-4	Fs
9'-[illegible]	22'-0½"	35'-2½"	49'-6½"	5'-2½"

SKILLING • HELLE CHRISTIANSEN • ROBERTSON Structural & Civil Engineers
X APPROVED AS NOTED
6/27/68 SK

CORE END

EL END TRUSS DESIGNATION	BEARING ANGLES MK	TYPE STEEL	CHORD SIZE	LENGTH	WE	MK	TYPE STEEL	DIA	LENGTH	VERTICAL ST STRUT MK	TYPE STEEL	DIA	LENGTH	STIFFENER MK V1 TYPE STEEL	DIA	LENGTH	MK V2 TYPE STEEL	DIA	LENGTH	MK V4 TYPE STEEL	DIA	LENGTH	WEB "Wc" MK	TYPE STEEL	PCS	DIA	LENGTH	WEB "WT" MK	TYPE STEEL	PCS	DIA	LENGTH	CONNECTION ANGLES (2 REQ'D) FURNISHED LOOSE NO	MK.	TYPE STEEL	ANGLE SIZE.	LENGTH
C32T11 58'	9	A242	2"x1½"x.25" (.31)	3'-2"	6'-4"									A242	.92	4⅜" (4)							4	A242	1	.92	3'-0½"	8	A242	1	.92	2'-5¾"	2	CA	A242	2"x1½"x.31	4'-4"

STEEL TRUSS DETAILS
FOR
WORLD TRADE CENTER - N.Y.C
FOR
THE PORT OF NEW YORK AUTHORITY

FLOOR TRUSS C32T11 58'-10" OVER L
WORLD TRADE CENTER TOWERS A-B

FABRICATION BY LACLEDE STEEL COMPANY

FABRICATED AT MADISON, ILLINOIS	DESIGN DRAWING NO 7-ABI-9 7-AB3-2 PLATE	
APPROVED FOR FABRICATION BY FOR P.O.N.Y.A. DATE	DRAWN BY: L.R. DATE: MAY 27, 1968	
APPROVED FOR FABRICATION BY FOR FABRICATOR DATE	CHECKED BY: J.R. PAUL DATE: MAY 27, 1968	IN CHARGE PROD. DEV.
LACLEDE STEEL CO DETAILED BY A.C. WEBER	FABRICATION CONT. NO. W.T.C. 221	SHEET NO. ST211

FABRICATION REQUIRMENTS	DESIGN	TOLERANCE
CAMBER AT MIDSPAN	1/4"	−1/4" +3/8"
DESIGN DEPTH	29"	± 1/4"
PANEL "K"	3'-4"	± 1/4"
OVERALL LENGTH	35'-8"	± 1/8"
WEB DEPTH	31 7/8"	± 1/4"

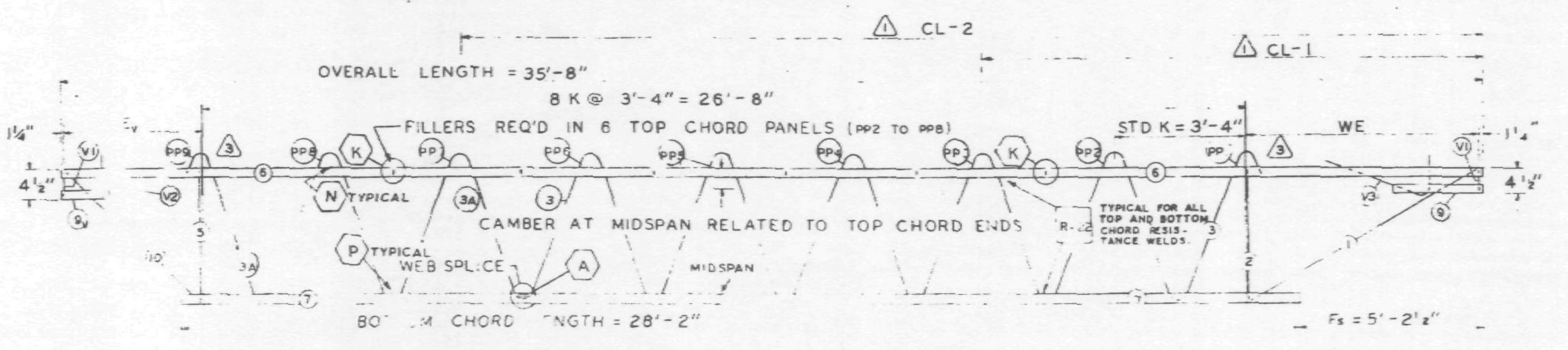

EL END (CORE) TRUSS ELEVATION Es END (COLUMN)

ALL PANEL POINTS RESISTANCE WELDED (×). ARC WELDS INDICATED AT SHADED AREAS AND AT BOTTOM CHORD WEB SPLICES. ALL WELD DETAILS SHOWN ON SHEETS ST290 AND ST291.

SEE SHEET ST295 FOR V1, V2, & V3 DETAILS. LETTERS IN HEXAGON INDICATE WELD DETAILS, i.e., (A). LETTERS AND NUMBERS IN SQUARES INDICATE RESISTANCE WELD STRENGTH IDENTIFIED IN THE QUALITY CONTROL PROGRAM, i.e., R-22.

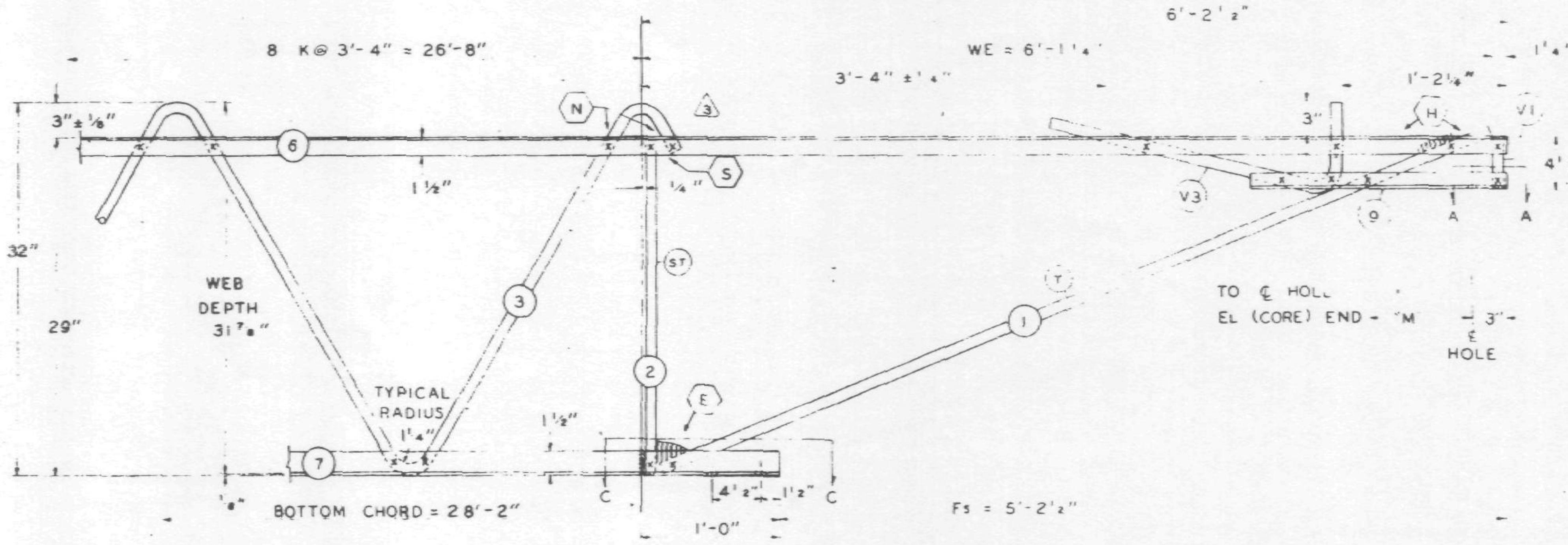

Es END (COLUMN)

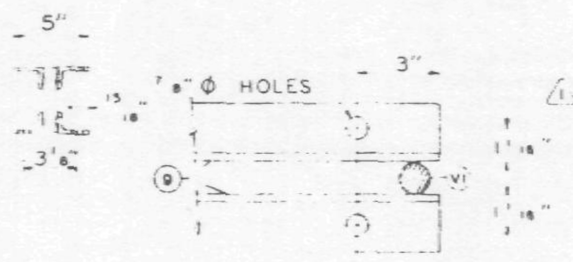

SECTION A-A

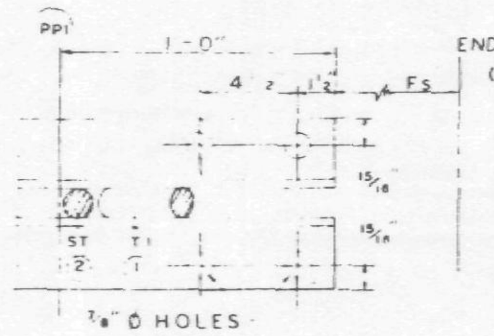

SECTION C-C

DAMPING UNIT CONNECTION PLATE ATTACHED TO BOTTOM CHORD (COL END) IN FIELD ASSEMBLY BY CONTRACT WTC 223.00.

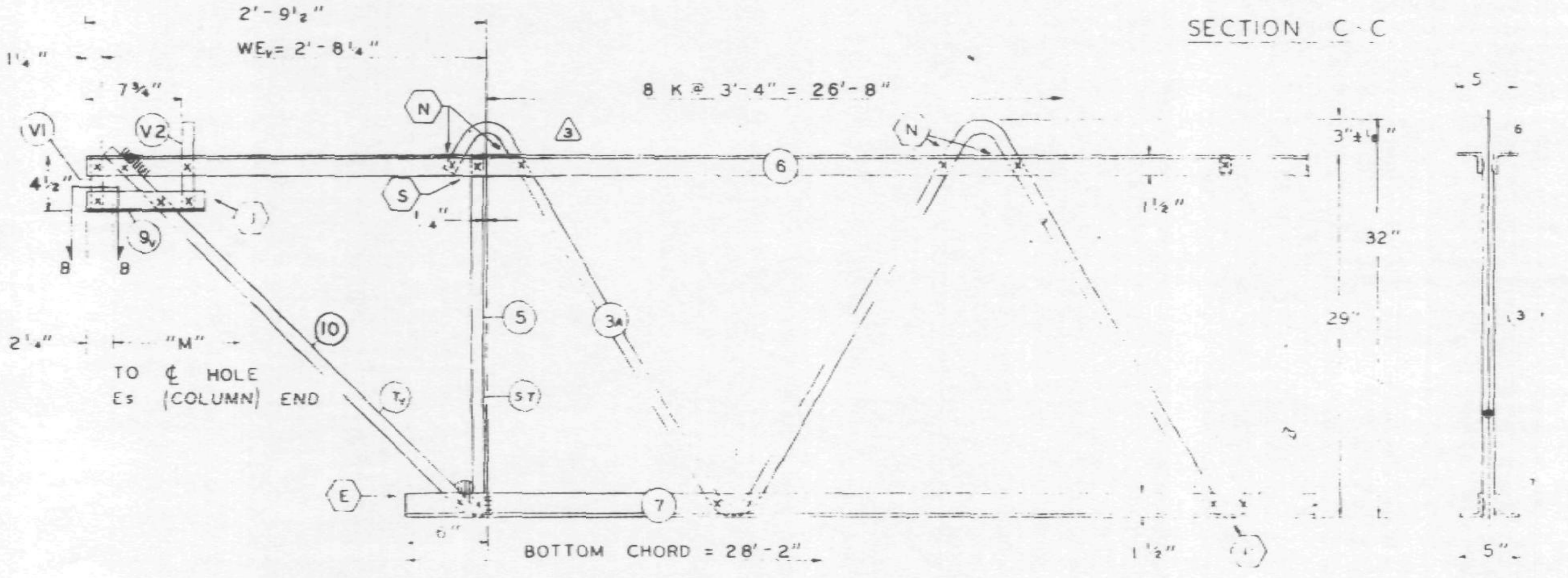

EL END (CORE)

NO.	DATE	REVISION	BY
3	11-20-68	AS NOTED	G.D.C.
2	6-20-68	CAMBER, END STIFFENER, WEB	T.M.C.
1	3-19-68	WELD DETAIL, CL DIMENSIONS, CAMBER	J.R.P.

REF DRWGS.

7-AB1-11	7-22-68
7-AB1-52	2-15-68
7-AB4-50	8-1-68
7-AB1-53	10-15-68
7-AB4-50 5	10-20-67

PAINT
LACLEDE ELECTROCOAT
RED NO 10001

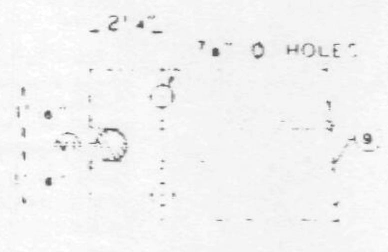

SECTION B-B

TRUSS DESIGNATION	TOP CHORD TWO ANGLES MK	TYPE STEEL	CHORD SIZE	LENGTH	BOTTOM CHORD TWO ANGLES MK	TYPE STEEL	CHORD SIZE	LENGTH	MAIN WEB "W" MK	TYPE STEEL	DIA	LENGTH	NO OF K	FILLER NO	DIA	"M" C-C HOLES	TRUSS DATA
C32T12-358	6	A242	2"x1½"x025	35'-8"	7	A242	2"x1½"x.025	28'-2"	3A 3	A242 A242	0.98 0.92	16'-0¼" 34'-8½"	2½ @ 3'-4" = 8'-4" 5½ @ 3'-4" = 18'-4"	6	.092	35'-2¾"	

COLUMN END	Es END TRUSS DESIGNATION	BEARING ANGLES MK	TYPE STEEL	CHORD SIZE	LENGTH	WE	DIAGONAL "T" STRUT MK	TYPE STEEL	DIA	LENGTH	VERTICAL "ST" STRUT MK	TYPE STEEL	DIA	LENGTH	END STIFFENER MK V1 TYPE STEEL	DIA	LENGTH	MK V2 TYPE STEEL	DIA	LENGTH
	C32T12-358	9	A242	2"x1½"x025	1'-10"	6'-1¼"		A242	098	6'-5"	2	A242	092	2'-4⅛"	A242	098	4⅜	A242	098	2'-9½

CHECK DIMENSION FOR TRUSS FAB LOCATION OF TRANS TRUSS

CL-1	CL-2	CL-3	CL-4	Fs
1'-10½	26'-2½"	—	—	5'-2½"

CORE END	EL END TRUSS DESIGNATION	BEARING ANGLES MK	TYPE STEEL	CHORD SIZE	LENGTH	WEv	DIAGONAL "Tv" STRUT MK	TYPE STEEL	DIA	LENGTH	VERTICAL "ST" STRUT MK	TYPE STEEL	DIA	LENGTH	END STIFFENER MK V1 TYPE STEEL	DIA	LENGTH	MK V3 TYPE STEEL	DIA	LENGTH	MK V4 TYPE STEEL	DIA	LENGTH	WEB MK	TYPE STEEL	PCS	DIA	LENGTH	WEB MK	TYPE STEEL	PCS	DIA	LENGTH
	C32T12-358	9v	A242	2"x1½"x025	10"	2'-8¼"	10	A242	098	3'-6¼"	5	A242	098	2'-4⅞"	A242	098	4¾	A242	098	7⅜"	—	—	—	—	—	—	—	—	—	—	—	—	—

STEEL TRUSS DETAILS
FOR
WORLD TRADE CENTER - N Y C
FOR
THE PORT OF NEW YORK AUTHORITY

FLOOR TRUSS C32T12 35'-8" OVERALL
WORLD TRADE CENTER TOWERS A-B

FABRICATION BY LACLEDE STEEL COMPANY			
FABRICATED AT MADISON, ILLINOIS		DESIGN DRAWING NO 7-AB1	PLATE
APPROVED FOR FABRICATION BY FOR PONYA	DATE 2/9/68	DRAWN BY DATE FEB 24, 1968	
APPROVED FOR FABRICATION BY FOR FABRICATOR	DATE	CHECKED BY J.R PAUL DATE FEB 24, 1968	IN CHARGE OF PROD DEV
DETAILED BY A C WEBER		FABRICATION CONT NO W T C 221	SHEET NO ST212

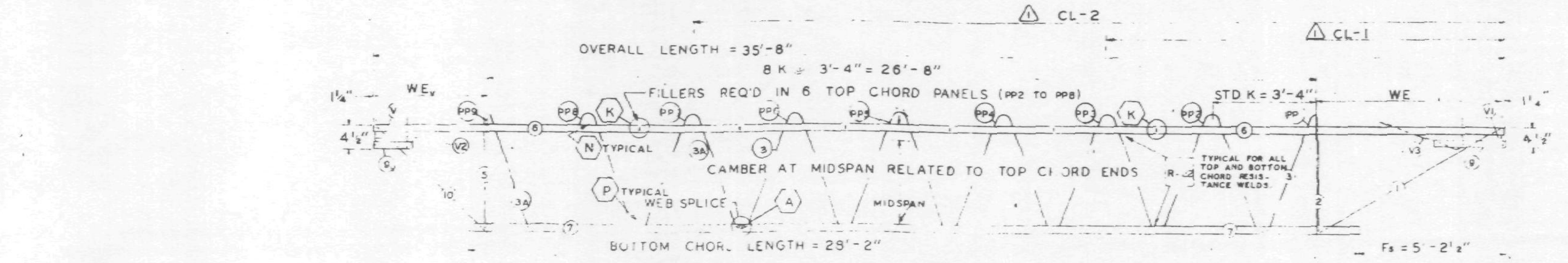

El END (CORE) — TRUSS ELEVATION — Es END (COLUMN)

ALL PANEL POINTS RESISTANCE WELDED.
ARC WELDS INDICATED AT SHADED AREAS AND AT BOTTOM CHORD WEB SPLICES.
ALL WELD DETAILS SHOWN ON SHEETS ST290 AND ST291.

SEE SHEET ST295 FOR V1, V2, & V3 DETAILS.
LETTERS IN HEXAGON INDICATE WELD DETAILS. ie.. (A).
LETTERS AND NUMBERS IN SQUARES INDICATE RESISTANCE WELD STRENGTH IDENTIFIED IN THE QUALITY CONTROL PROGRAM. ... R-22.

FABRICATION REQUIRMENTS	DESIGN	TOLERANCE
CAMBER AT MIDSPAN	1/4"	1/4" -3/8"
DESIGN DEPTH	3"	± 1/4"
PANEL "K"	-4"	± 1/4"
OVERALL LENGTH	35'-8"	± /8
WEB DEPTH	31 7/8"	/4"

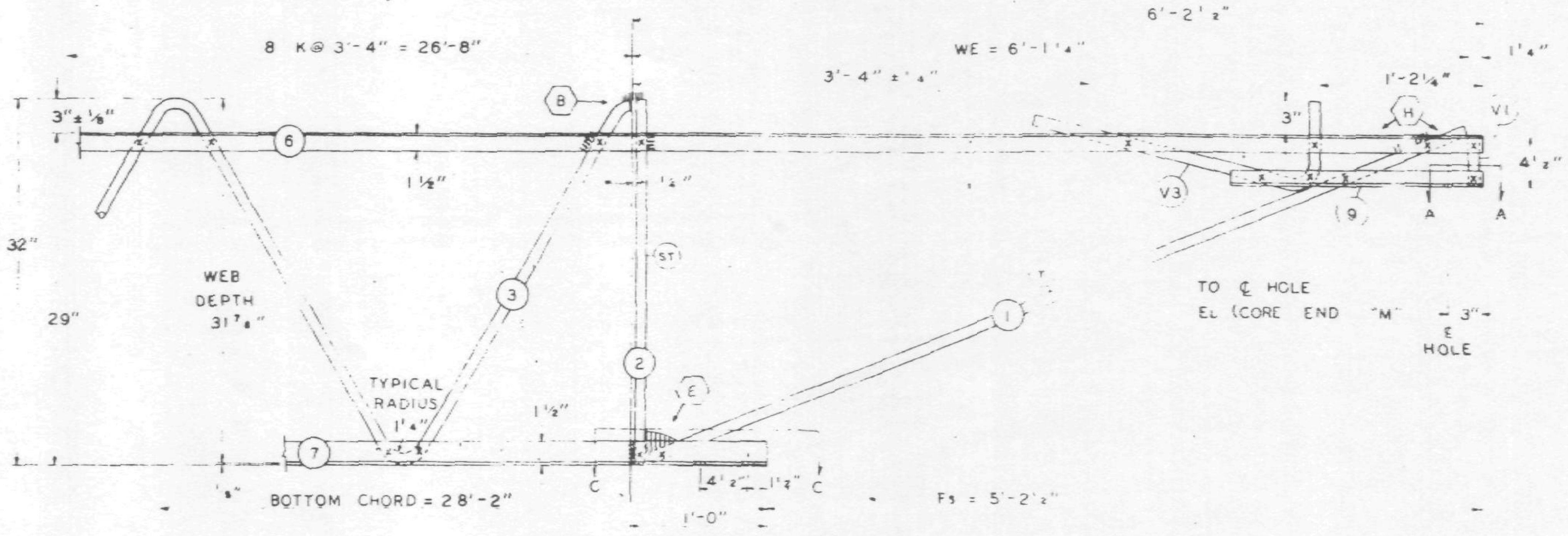

Es END (COLUMN)

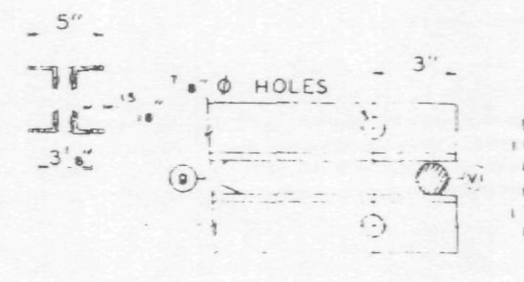

SECTION A-A

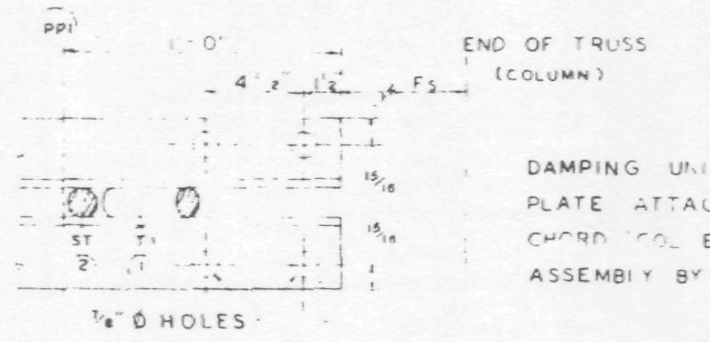

SECTION C-C

DAMPING UNIT CONNECTION PLATE ATTACHED TO BOTTOM CHORD (COL END) IN FIELD ASSEMBLY BY CONTRACT WTC 223.00.

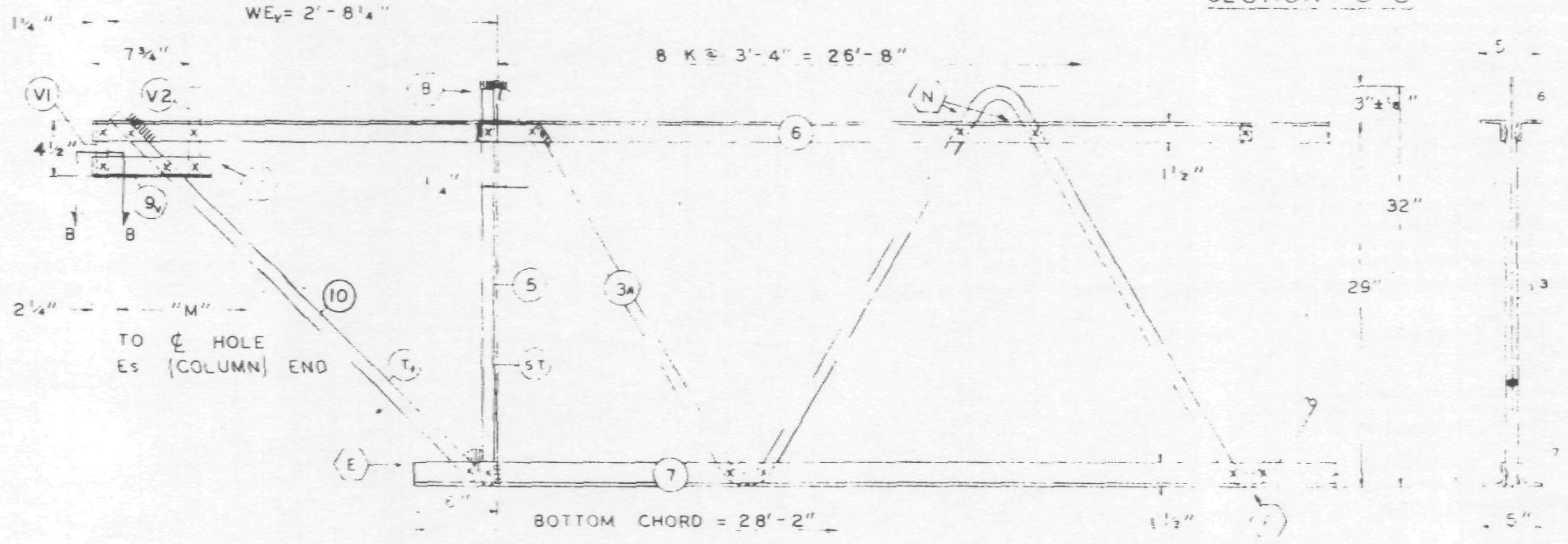

El END (CORE)

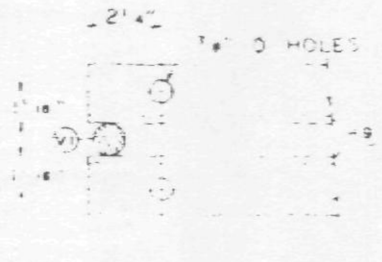

SECTION B-B

NO.	DATE	REVISION	BY
2	6-20-68	CAMBER, END STIFFENER, WEB	T.M.C.
1	3-19-68	WELD DETAIL, CL DIMINSIONS, CAMBER	J.R.P.

REF DRWGS.

7-ABI-11	4-1-68
7-ABI-52	2-15-68
7-A84-50 & 50.2	10-20-67
7-ABI-53	4-1-68
7-A84-50.5	10-20-67

PAINT
LACLEDE ELECTROCOAT
RED NO.

TRUSS DESIGNATION	TOP CHORD TWO ANGLES				BOTTOM CHORD TWO ANGLES				MAIN WEB "W"					FILLER		"M" ℄ HOLES	TRUSS DATA	
	MK	TYPE STEEL	CHORD SIZE	LENGTH	MK	TYPE STEEL	CHORD SIZE	LENGTH	MK	TYPE STEEL	DIA	LENGTH	NO OF K	NO	DIA			
C32T12-358	6	A242	2"x1½"x025	35'-8"	7	A242	2"x1½"x025	28'-2"	3A 3	A242 A242	0.98 0.92	15'-6⅞" 34'-3⅛"	2½ @ 3'-4" = 8'-4" 5½ @ 3'-4" = 18'-4"	6	0.92	35'-2¾"		

COLUMN END

Es END	TRUSS DESIGNATION	BEARING ANGLES				WE	DIAGONAL "T" STRUT				VERTICAL "ST" STRUT				END STIFFENER MK V1			END STIFFENER MK V3		
		MK	TYPE STEEL	CHORD SIZE	LENGTH		MK	TYPE STEEL	DIA	LENGTH	MK	TYPE STEEL	DIA	LENGTH	TYPE STEEL	DIA	LENGTH	TYPE STEEL	DIA	LENGTH
	C32T12-358	9	A242	2"x1½"x0.25	1'-10"	6'-1¼"	1	A242	098	6'-5"	2	A242	092	2'-7⅞"	A242	093	4⅜	A242	098	2'-9½"

CORE END

El END	TRUSS DESIGNATION	BEARING ANGLES				WEv	DIAGONAL "Tv" STRUT				VERTICAL "ST" STRUT				STIFFENER MK V1			STIFFENER MK V2			MK V4			WEB "DS10"					WEB "DS5"				
		MK	TYPE STEEL	CHORD SIZE	LENGTH		MK	TYPE STEEL	DIA	LENGTH	MK	TYPE STEEL	DIA	LENGTH	TYPE STEEL	DIA	LENGTH	TYPE STEEL	DIA	LENGTH	TYPE STEEL	DIA	LENGTH	MK	TYPE STEEL	PCS	DIA	LENGTH	MK	TYPE STEEL	PCS	DIA	LENGTH
	C32T12-358	9v	A242	2"x1½"x0.25	10"	2'-8¼"	10	A242	098	3'-6¼"	5	A242	098	2'-7⅞"	A242	098	4½"	A242	098	7⅜"	—	—	—	—	—	—	—	—	—	—	—	—	—

CHECK DIMENSION FOR TRUSS FAB LOCATION OF TRANS TRUSS

CL-1	CL-2	CL-3	CL-4	Fs
12'-10½"	26'-2½"	—	—	5'-2½"

STEEL TRUSS DETAILS
FOR
WORLD TRADE CENTER - N Y C
FOR
THE PORT OF NEW YORK AUTHORITY

FLOOR TRUSS C32T12 35'-8" OVERALL
WORLD TRADE CENTER TOWERS A-B

FABRICATION BY LACLEDE STEEL COMPANY			
FABRICATED AT MADISON, ILLINOIS		DESIGN DRAWING NO 7-ABI-11	PLATE
APPROVED FOR FABRICATION BY JW FOR P.O.N.Y.A.	DATE 6/25/68	DRAWN BY: DATE FEB. 24, 1968	
APPROVED FOR FABRICATION BY FOR FABRICATOR	DATE	CHECKED BY: J.B. PAUL DATE FEB 24, 1968	IN CHARGE OF PROD. DEV.
DETAILED BY A. C. WEBER		FABRICATION CONT NO W.T.C. 221	SHEET NO. ST212

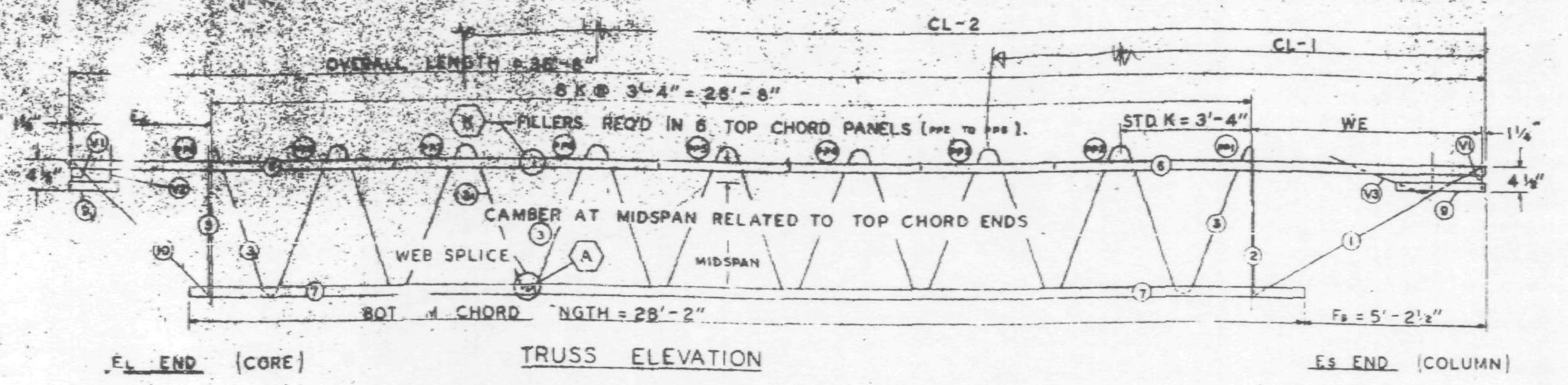

ALL PANEL POINTS RESISTANCE WELDED (×).
ARC WELDS INDICATED AT SHADED AREAS
AND AT BOTTOM CHORD WEB SPLICES.
ALL WELD DETAILS SHOWN ON SHEETS ST290
AND ST291.
BOXED LETTERS INDICATE WELD DETAIL, ie., (A).

FABRICATION REQUIRMENTS	DESIGN	TOLERANCE
CAMBER AT MIDSPAN	1/2"	± 3/8"
DESIGN DEPTH	29"	± /4"
PANEL "K"	3'-4"	± 1/4"
OVERALL LENGTH	35'-	± 3/8"
WEB DEPTH	8"	± 1/ "

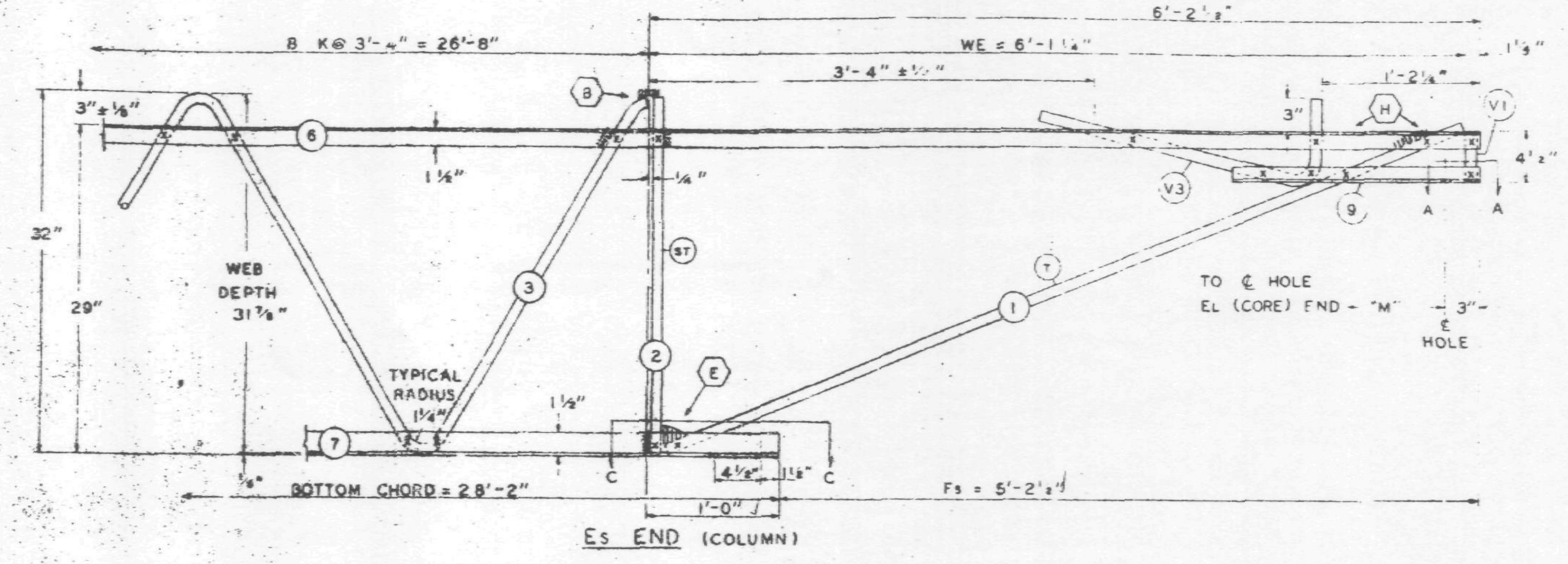

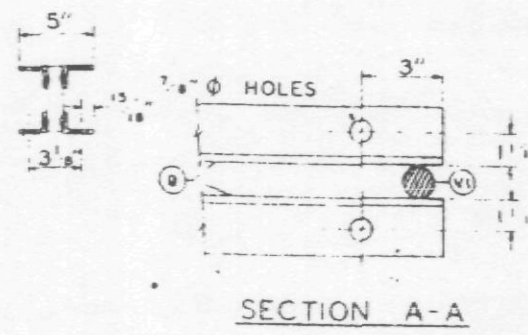

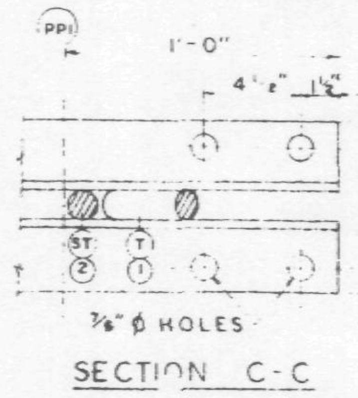

DAMPING UNIT CONNECTION
PLATE ATTACHED TO BOTTOM
CHORD (COL END) IN FIELD
ASSEMBLY BY CONTRACT WTC 223.00.

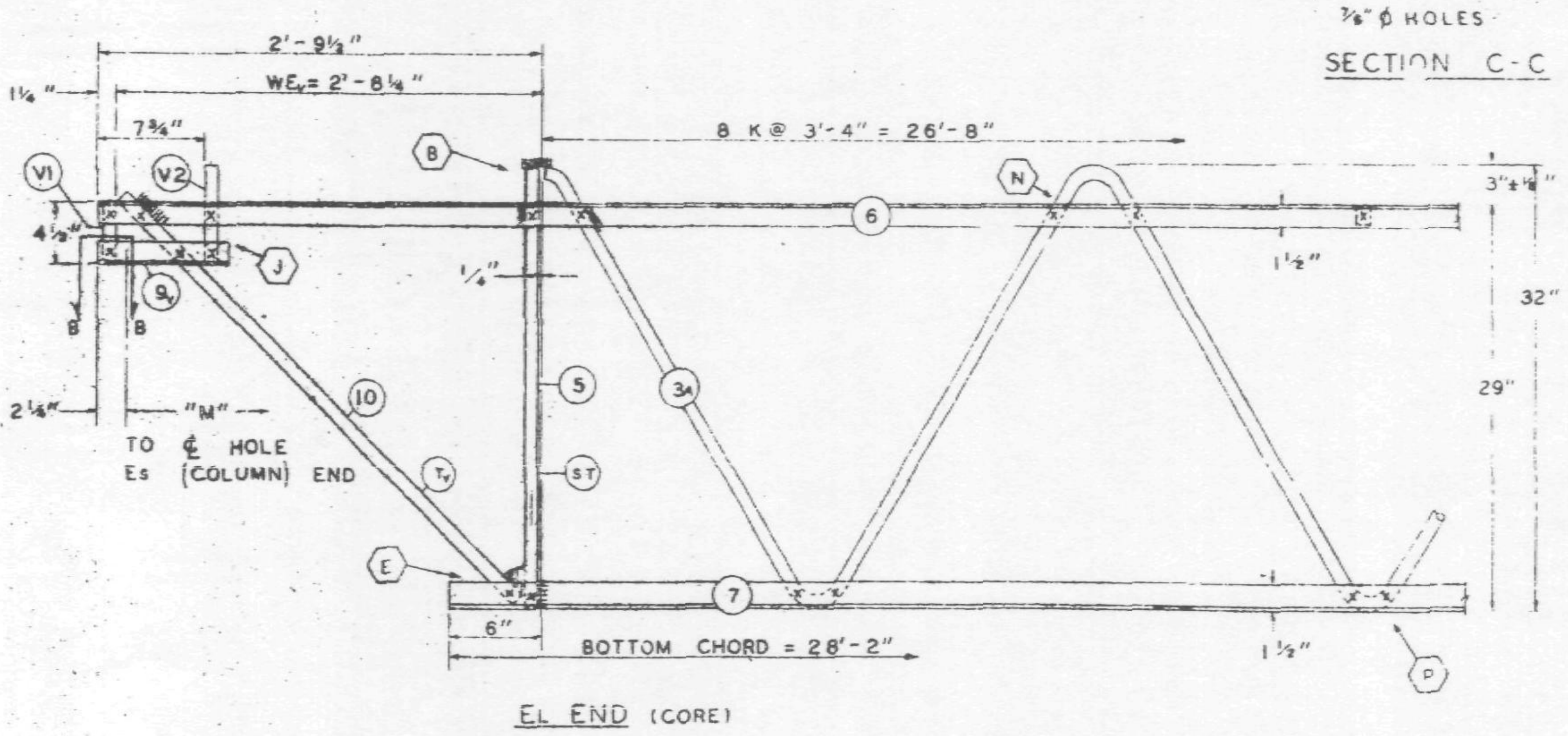

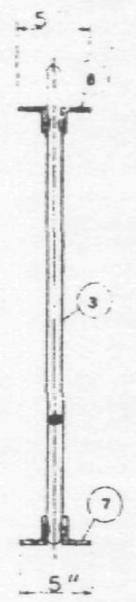

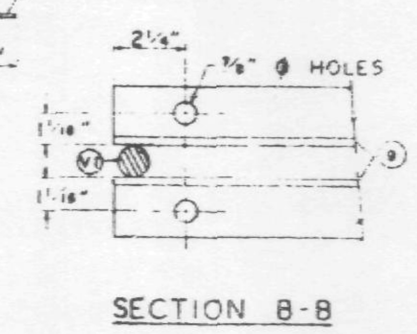

REF DRWGS.

7-ABI-11	2-15-68
7-ABI-52	2-15-68
7-AB4-50 & 50.2	10-20-67
7-ABI-53	1-3-68
7-AB4-50.5	10-20-67

PAINT
LACLEDE ELECTROCOAT
RED NO. 10001

TRUSS DESIGNATION	TOP CHORD TWO ANGLES MK.	TYPE STEEL	CHORD SIZE	LENGTH	BOTTOM CHORD TWO ANGLES MK.	TYPE STEEL	CHORD SIZE	LENGTH	MAIN WEB "W" MK.	TYPE STEEL	DIA.	LENGTH	NO. OF K	FILLER NO	DIA.	"M" C/C HOLES	TRUSS DATA	
C32T12-35B	6	A242	2"×1½"×0.25	35'-8"	7	A242	2"×1½"×0.25	28'-2"	3A 3	A242 A242	0.98 0.92	18'-8⅛" 34'-3⅛"	2½ @ 3'-4" = 8'-4" 5½ 3'-4" = 18'-4"	6	0.92	35'-2¾"		

COLUMN END

Es END	TRUSS DESIGNATION	BEARING ANGLES MK.	TYPE STEEL	CHORD SIZE	LENGTH	WE	DIAGONAL "T" STRUT MK.	TYPE STEEL	DIA	LENGTH	VERTICAL "ST" STRUT MK.	TYPE STEEL	DIA.	LENGTH	END STIFFENER MK. V1 TYPE STEEL	DIA.	LENGTH	MK. V3 TYPE STEEL	DIA.	LENGTH
	C32T12-35B	9	A242	2"×1½"×0.25	1'-10"	6'-1¼"	1	A242	0.98	6'-5"	2	A242	0.98	2'-7⅞"	A242	0.98	4⅜"	A242	0.98	2'-9½"

CORE END

EL END	TRUSS DESIGNATION	BEARING ANGLES MK.	TYPE STEEL	CHORD SIZE	LENGTH	WE₂	DIAGONAL "T₂" STRUT MK.	TYPE STEEL	DIA	LENGTH	VERTICAL "ST" STRUT MK.	TYPE STEEL	DIA.	LENGTH	END STIFFENER MK. V1 TYPE STEEL	DIA.	LENGTH	MK. V2 TYPE STEEL	DIA.	LENGTH	MK. V4 TYPE STEEL	DIA.	LENGTH	WEB "DS₁₀" MK.	TYPE STEEL	PCS	DIA	LENGTH	WEB "DS₅" MK.	TYPE STEEL	PCS	DIA.	LENGTH
	C32T12-35B	[illegible]	A242	2"×1½"×0.25	10"	2'-8¼"	10	A242	0.98	1'-6¼"	5	A242	0.98	2'-4⅜"	A242	0.98	4⅜"	A242	0.96	7¾"	—	—	—	—	—	—	—	—	—	—	—	—	—

CHECK DIMENSION FOR TRUSS FAB.

LOCATION OF TRANS. TRUSS				
CL-1	CL-2	CL-3	CL-4	Fs
9'-6½"	22'-10½"	—	—	5'-2½"

12'-10½

STEEL TRUSS DETAILS
FOR
WORLD TRADE CENTER - N.Y.C.
FOR
THE PORT OF NEW YORK AUTHORITY

FLOOR TRUSS C32T12 35'-8" OVERALL
WORLD TRADE CENTER TOWERS A-B

FABRICATION BY: LACLEDE STEEL COMPANY

FABRICATED AT: MADISON, ILLINOIS		DESIGN DRAWING NO. 7-ABI-11	PLATE
APPROVED FOR FABRICATION BY: ______ FOR P.O.N.Y.A.	DATE	DRAWN BY: L.G. DATE: FEB. 24, 1968	
APPROVED FOR FABRICATION BY: ______ FOR FABRICATOR	DATE.	CHECKED BY: J.B. PAUL DATE: FEB. 24, 1968	IN CHARGE OF PROD. DEV.
LACLEDE STEEL CO. DETAILED BY: A.C. WEBER		FABRICATION CONT. NO. W.T.C. 221	SHEET NO. ST212

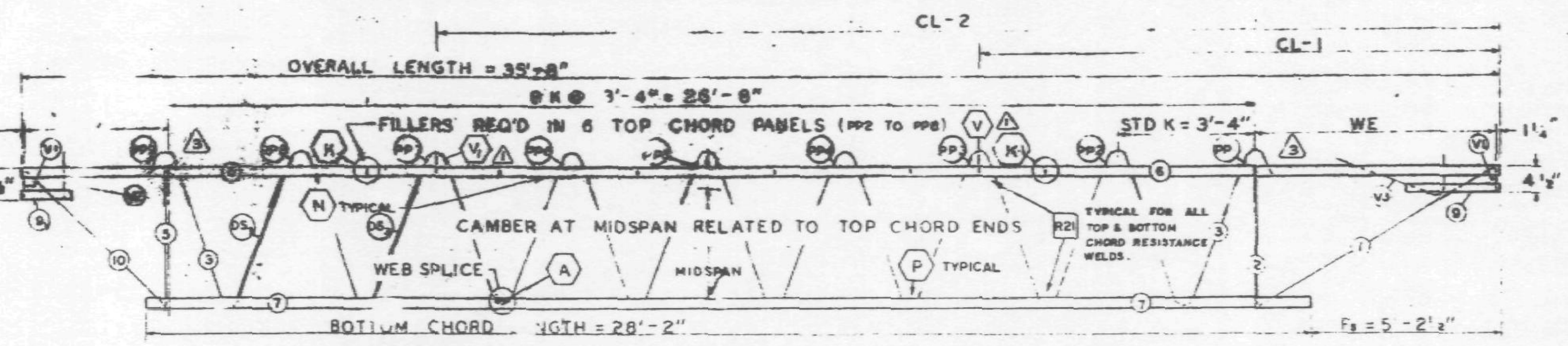

EL END (CORE) TRUSS ELEVATION Es END (COLUMN)

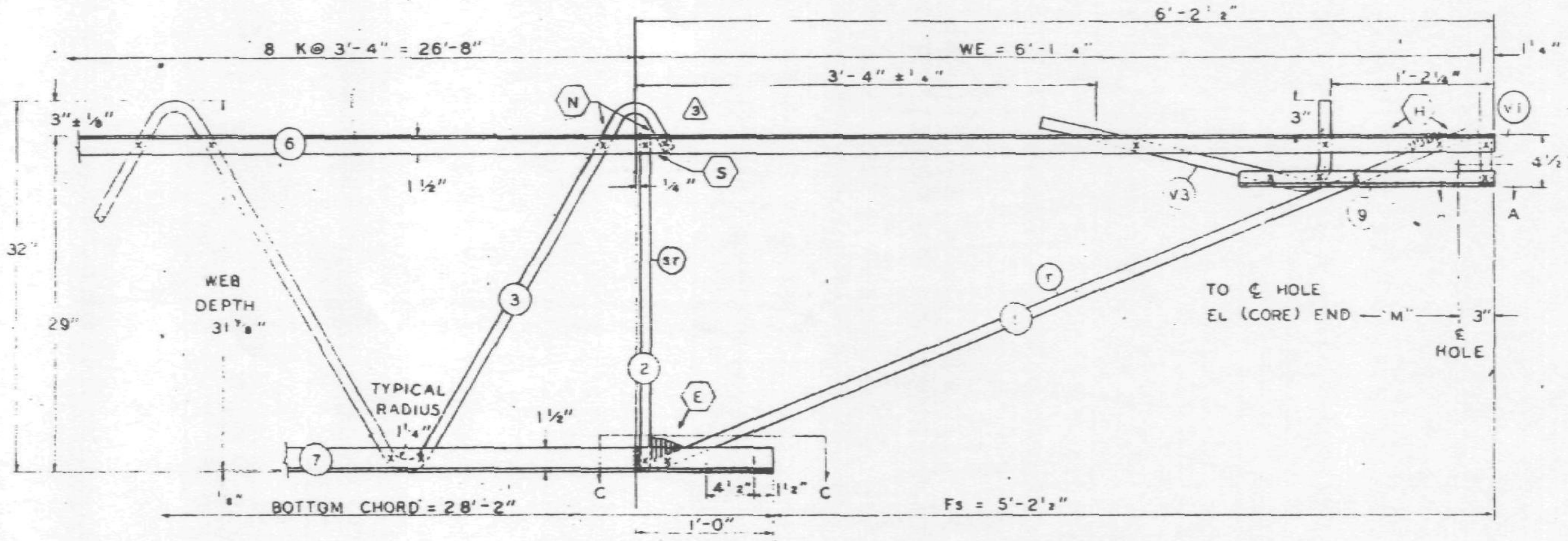

Es END (COLUMN)

ALL PANEL POINTS RESISTANCE WELDED (×).
ARC WELDS INDICATED AT SHADED AREAS
AND AT BOTTOM CHORD WEB SPLICES.
ALL WELD DETAILS SHOWN ON SHEETS ST290, ST291 AND ST292.
SEE SHEET ST295 FOR V1, V2, & V3 DETAILS
LETTERS IN HEXAGON INDICATE WELD DETAIL, ie., (A).
LETTERS AND NUMBERS IN SQUARES INDICATE RESISTANCE WELD STRENGTH IDENTIFIED IN THE QUALITY CONTROL PROGRAM, ie., R21.

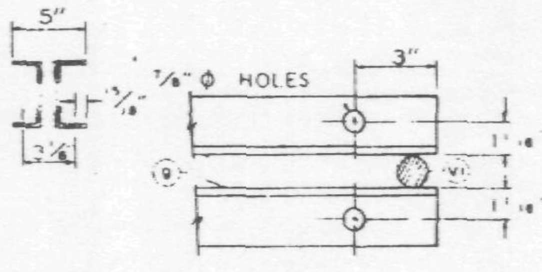

SECTION A-A

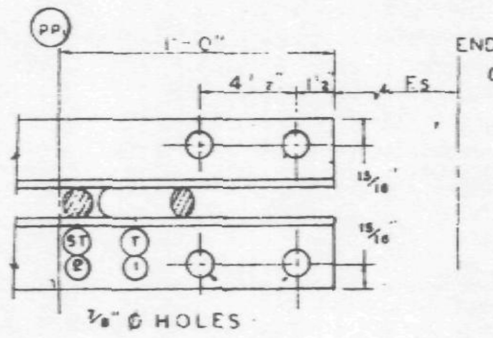

SECTION C-C

DAMPING UNIT CONNECTION PLATE ATTACHED TO BOTTOM CHORD (COL END) IN FIELD ASSEMBLY BY CONTRACT WTC 223.00.

FABRICATION REQUIRMENTS

	DESIGN	TOLERANCE
CAMBER AT MIDSPAN ⚠1	7/8"	± 3/8"
DESIGN DEPTH	29"	± 1/4"
PANEL "K"	3'-4"	± ¼"
OVERALL LENGTH	35'-8"	± 3/8"
WEB DEPTH	31 7	± 1/4"

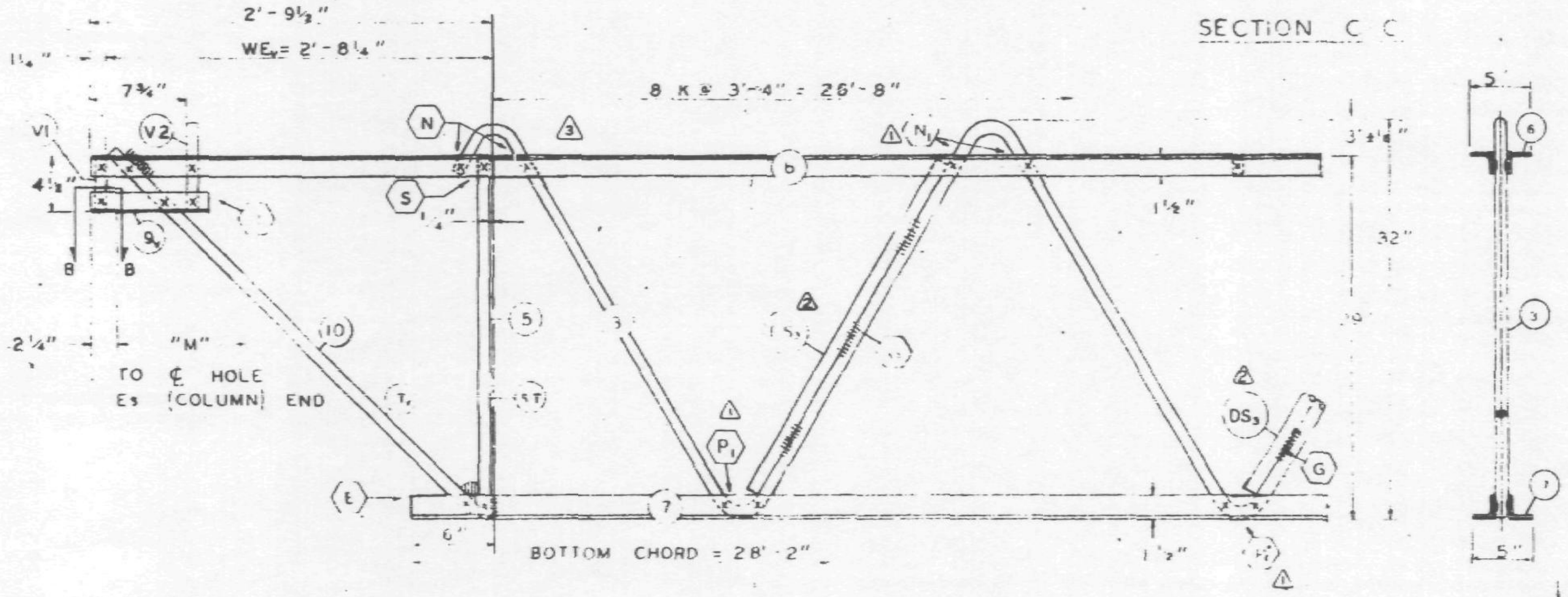

EL END (CORE)

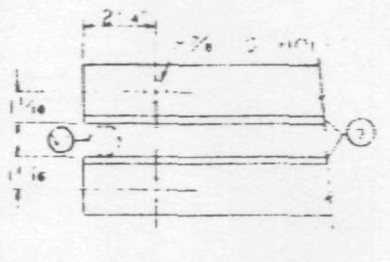

SECTION B-B

NO	DATE	REVISION	BY
3	11-20-68	AS NOTED	G.D.C.
2	7-23-68	MARK DS₂ LENGTH	T.M.C.
1	6-22-68	AS NOTED	T.M.C.

⚠3 REF DRWGS.

7-AB1-12	7-22-68
7-AB1-52	2-15-68
7-AB4-50	8-1-68
7-AB1-53	7-22-68
7-AB4-50 5	10-20-67

PAINT
LACLEDE ELECTROCOAT
REQ NO

TRUSS DESIGNATION	TOP CHORD TWO ANGLES				BOTTOM CHORD TWO ANGLES				MAIN WEB "W"					FILLER		"M" ℄ HOLES	CONNECTION FILLERS ⚠1		
	MK	TYPE STEEL	CHORD SIZE	LENGTH	MK	TYPE STEEL	CHORD SIZE	LENGTH	MK	TYPE STEEL	DIA	LENGTH ⚠3	NO OF K	NO	DIA		NO.	DIA	LENGTH
C32T13-358	6	A242	2"×1½"×0.25	35'-8"	7	A242	2"×1½"×.025	28'-2"	3	A242	098	50'-8¾"	8 @ 3'-4" = 26'-8"	6	0.98	35'-2¾"	2	.98	3"

COLUMN END	Es END	TRUSS DESIGNATION	BEARING ANGLES				WE	DIAGONAL "T" STRUT				VERTICAL "ST" STRUT				END STIFFENER MK V1			MK V3		
			MK	TYPE STEEL	CHORD SIZE	LENGTH		MK	TYPE STEEL	DIA	LENGTH	MK	TYPE STEEL	DIA	LENGTH ⚠3	TYPE STEEL	DIA	LENGTH	TYPE STEEL	DIA	LENGTH
		C32T13-358	9	A242	2"×1½"×.025	1'-0"	6'-1¼"		A242	098	6'-5"	2	A242	098	2'-4⅜"	A242	098	4⅜"	A242	098	2'-9½"

CORE END	EL END	TRUSS DESIGNATION	BEARING ANGLES				WEv	DIAGONAL "Tv" STRUT				VERTICAL "STv" STRUT				END STIFFENER MK V1			MK V2			MK V4			WEB "DS10"					WEB "DS5"					DOUBLE STRUT "DS2"				
			MK	TYPE STEEL	CHORD SIZE	LENGTH		MK	TYPE STEEL	DIA	LENGTH	MK	TYPE STEEL	DIA	LENGTH ⚠3	TYPE STEEL	DIA	LENGTH	TYPE STEEL	DIA	LENGTH	TYPE STEEL	DIA	LENGTH	MK	TYPE STEEL	PCS	DIA	LENGTH	MK	TYPE STEEL	PCS	DIA	LGT.	MK	PCS	TYPE STEEL	DIA	LENGTH ⚠2
		C32T13-358	9v	A242	2"×1½"×0.25	10"	2'-8¼"	10	A242	098	3'-6¼"	5	A242	098	2'-4⅞"	A242	0.98	4⅜"	A242	098	7⅜"	—	—	—	—	—	—	—	—	—	—	—	—	—	DS₂	2	A242	.75	2'-6¾"

CHECK DIMENSION FOR TRUSS FAB

LOCATION OF TRANS TRUSS				
CL-1	CL-2	CL-3	CL-4	Fs
12'-10½"	26'-2¼"	—	—	5'-2½"

STEEL TRUSS DETAILS
FOR
WORLD TRADE CENTER N.Y.C
FOR
THE PORT OF NEW YORK AUTHORITY

FLOOR TRUSS C32T13 35'-8" OVERALL
WORLD TRADE CENTER TOWERS A-B

FABRICATION BY LACLEDE STEEL COMPANY		
FABRICATED AT MADISON, ILLINOIS	DESIGN DRAWING NO 7-AB1-12	PLATE
APPROVED FOR FABRICATION FOR PONYA (signature) DATE 12/9/68	DRAWN BY DATE FEB 28, 1968	
APPROVED FOR FABRICATION BY FOR FABRICATOR DATE	CHECKED BY J.F. PAUL DATE FEB 28, 1968	IN CHARGE OF PROD. DEV
DETAILED BY A.C. WEBER	FABRICATION CONT. NO WTC 221	SHEET NO ST213

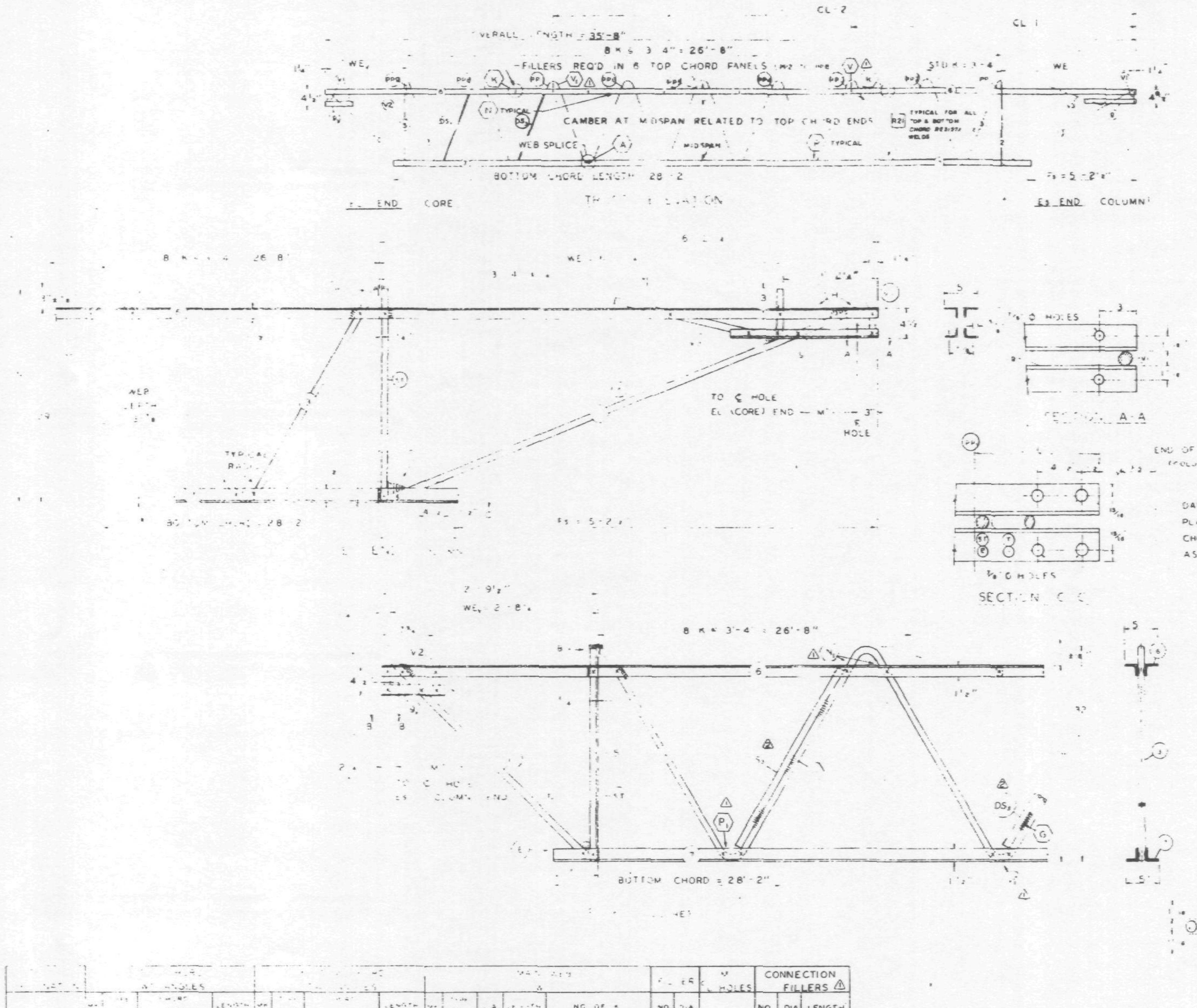

FABRICATION REQUIREMENTS

	DESIGN	TOLERANCE
CAMBER AT MIDSPAN △	7 8"	± 3 8"
DESIGN DEPTH	29"	± 1 4"
PANEL "K"	3'-4"	± 1 4"
OVERALL LENGTH	35'-8"	± 3 8"
WEB DEPTH	3' 7 8"	± 1 4"

ALL PANEL POINTS RESISTANCE WELDED. ARC WELDS INDICATED AT SHADED AREAS AND AT BOTTOM CHORD WEB SPLICES.
ALL WELD DETAILS SHOWN ON SHEETS ST290, ST291 △ AND ST292.
SEE SHEET ST295 FOR V1, V2, & V3 DETAILS
LETTERS IN HEXAGON INDICATE WELD DETAIL, i.e., (A).
LETTERS AND NUMBERS IN SQUARES INDICATE RESISTANCE WELD STRENGTH IDENTIFIED IN THE QUALITY CONTROL PROGRAM, i.e., [R21].

DAMPING UNIT CONNECTION PLATE ATTACHED TO BOTTOM CHORD (COL END) IN FIELD ASSEMBLY BY CONTRACT WTC 223.00.

Mark	Top Chord Angles				Bottom Chord Angles				Main Web					Fillers		Holes	Connection Fillers △		
	MK	TYPE STEEL	SIZE	LENGTH	MK	TYPE STEEL	SIZE	LENGTH	MK	TYPE STEEL	DIA	LENGTH	NO. OF K	NO	DIA		NO.	DIA	LENGTH
[illegible]		A[illegible]	[illegible] 2 × [illegible] × .025	35' 8"	7	A24[illegible]	2 × [illegible] × .025	28'-2"		A242	.096	49'-10"	8 @ 3'-4" = 26' 8"	6	.058	35'-2¾"	2	.98	3"

Mark	Bearing Angles				WF	Diagonal Strut				Vertical Strut				End Stiffener MK V1			End Stiffener MK V3		
	MK	TYPE STEEL	SIZE	LENGTH		MK	TYPE STEEL	DIA	LENGTH	MK	TYPE STEEL	DIA	LENGTH	TYPE STEEL	DIA	LENGTH	TYPE STEEL	DIA	LENGTH
[illegible]		A[illegible]	2 × [illegible] × .025		6'-1¼"		A24[illegible]	.098	6 [illegible]	2	A242	.098	2'-7⅝"	A242	.098	4⅜"	A242	.098	2'-9½"

CHECK DIMENSION FOR TRUSS FAB				
LOCATION OF TRANS TRUSS				
CL-1	CL-2	CL-3	CL-4	E3
12'-10½"	28'-2⅞"	—	—	5'-2½"

Mark	Bearing Angles				WF	Diagonal Strut				Vertical Strut				End Stiffener MK V1			End Stiffener MK V2			End Stiffener MK V4			Web "DS10"					Web "DS5"					Double Strut DS8			
	MK	TYPE STEEL	SIZE	LENGTH		MK	TYPE STEEL	DIA	LENGTH	MK	TYPE STEEL	DIA	LENGTH	TYPE STEEL	DIA	LENGTH	TYPE STEEL	DIA	LENGTH	TYPE STEEL	DIA	LENGTH	MK	TYPE STEEL	PCS	DIA	LENGTH	MK	TYPE STEEL	PCS	DIA	LGT.	MK	PCS	TYPE STEEL	DIA	LENGTH △
[illegible]			2 × [illegible] × .025		2'-6¼"		A242	.58	3'-6¾"	5	A242	.096	2'-7⅛"	A242	.098	4⅜"	A242	.098	7⅝"	—	—	—	—	—	—	—	—	—	—	—	—	—	DS8	2	A242	.75	2'-6¾"

△	7-23-68	MARK DS8 LENGTH	
△	4-22-68	AS NOTED	
NO.	DATE	REVISION	BY

REF DRWGS
T AB1-2
T AB1-52
T AB4-50 & 50.2 10-20-67
T AB1-53 4-1-68
T AB4-50.5 10-20-67

FLOOR TRUSS C32T13 35'-8" OVERALL
WORLD TRADE CENTER TOWERS A-B

FABRICATION BY LACLEDE STEEL COMPANY		
FABRICATED AT MADISON, ILLINOIS	DESIGN DRAWING NO. T AB1-12	PLATE
APPROVED FOR FABRICATION DATE FOR PONYA	DRAWN BY [illegible] DATE FEB 24, 1968	
APPROVED FOR FABRICATION DATE FOR FABRICATOR	CHECKED BY J.R. PAUL DATE FEB 24, 1968	IN CHARGE PROD. DEV.
DETAILED BY [illegible] WEBER	FABRICATION CONT. NO. WTC 221	SHEET ST213

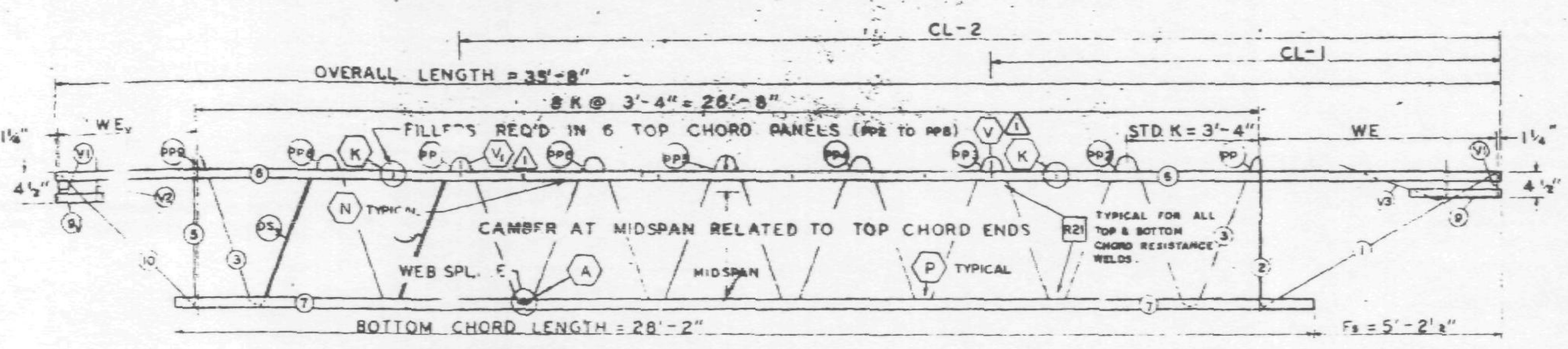

EL END (CORE) TRUSS ELEVATION Es END (COLUMN)

FABRICATION REQUIRMENTS

	DESIGN	TOLERANCE
CAMBER AT MIDSPAN ⚠1	7/8"	3/8"
DESIGN DEPTH	29"	± 1/4"
PANEL "K"	3' 4"	± 1/4"
OVERALL LENGTH	[illegible]-8"	± 3/8"
WEB DEPTH	31 7/8"	± 4"

ALL PANEL POINTS RESISTANCE WELDED (×).
ARC WELDS INDICATED AT SHADED AREAS AND AT BOTTOM CHORD WEB SPLICES.
ALL WELD DETAILS SHOWN ON SHEETS ST290, ST291 ⚠1 AND ST292.
SEE SHEET ST295 FOR V1, V2, & V3 DETAILS
LETTERS IN HEXAGON INDICATE WELD DETAIL, ie., (A).
LETTERS AND NUMBERS IN SQUARES INDICATE RESISTANCE WELD STRENGTH IDENTIFIED IN THE QUALITY CONTROL PROGRAM, ie., R21.

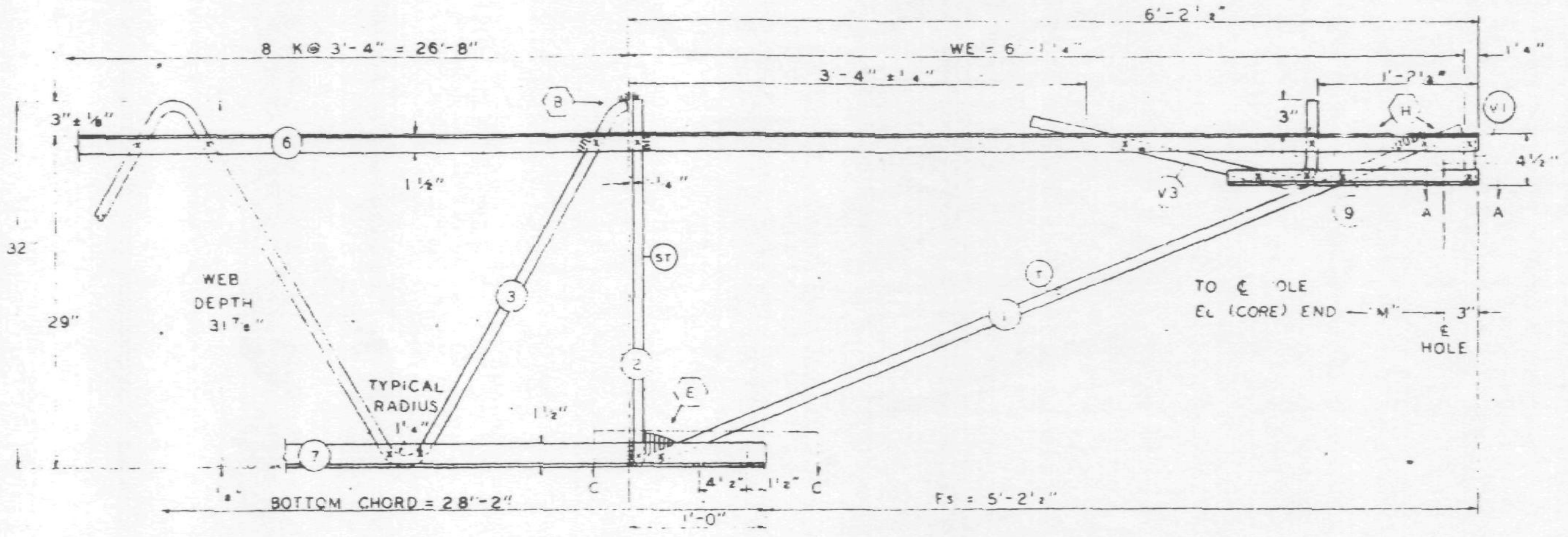

Es END (COLUMN)

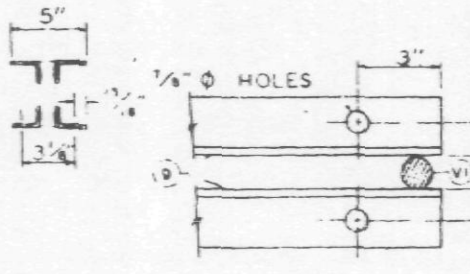

SECTION A-A

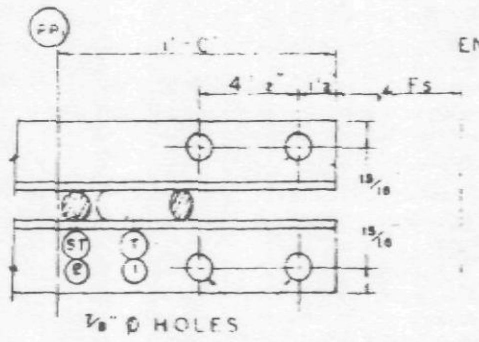

SECTION C-C

DAMPING UNIT CONNECTION PLATE ATTACHED TO BOTTOM CHORD (COL END) IN FIELD ASSEMBLY BY CONTRACT WTC 223.00.

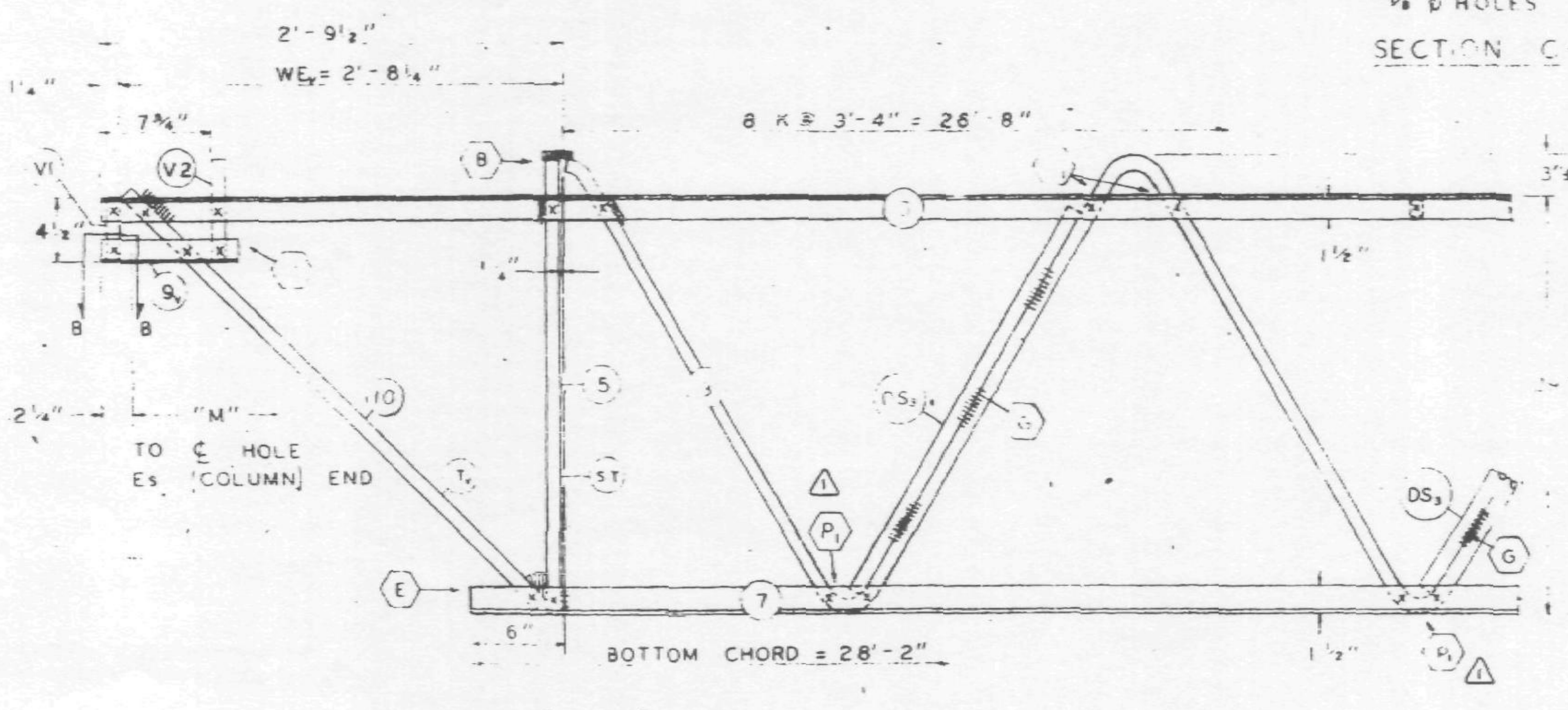

EL END (CORE)

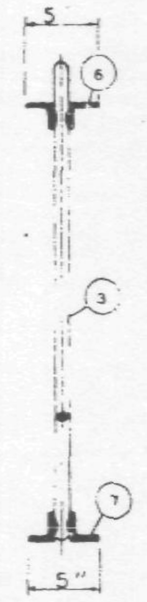

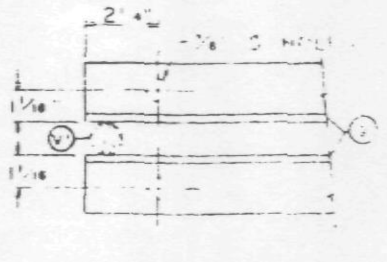

SECTION B-B

NO	DATE	REVISION	BY
⚠1	6-22-68	AS NOTED	T.N.C.

REF DRWGS.

7-A81-12	4-1-68
7-A81-52	2-13-68
7-A84-50 & 50.2	10-20-67
7-A81-53	4-1-68
7-A84-505	10-20-67

PAINT
LACLEDE ELECTROCOAT
RED NO [illegible]

TRUSS DESIGNATION	TOP CHORD TWO ANGLES				BOTTOM CHORD TWO ANGLES				MAIN WEB "W"					FILLER		"M" ℄ HOLES	CONNECTION FILLERS ⚠1		
	MK	TYPE STEEL	CHORD SIZE	LENGTH	MK	TYPE STEEL	CHORD SIZE	LENGTH	MK	TYPE STEEL	DIA	LENGTH	NO OF K	NO	DIA		NO.	DIA	LENGTH
C32T13-358	6	A242	2"×1½"×0.25	35'-8"	7	A242	2"×1½"×0.25	28'-2"	3	A242	0.98	49'-10"	8 @ 3'-4" = 26'-8"	6	0.98	35'-2¾"	2	.98	3"

COLUMN END

Es END	TRUSS DESIGNATION	BEARING ANGLES				WE	DIAGONAL "T" STRUT				VERTICAL "ST" STRUT				END STIFFENER MK. V1			MK. V3		
		MK	TYPE STEEL	CHORD SIZE	LENGTH		MK	TYPE STEEL	DIA	LENGTH	MK	TYPE STEEL	DIA	LENGTH	TYPE STEEL	DIA	LENGTH	TYPE STEEL	DIA	LENGTH
	C32T13-358	9	A242	2"×1½"×0.25	1'-10"	6'-1¼"	[illegible]	A242	0.98	6'-5"	2	A242	0.98	2'-7⅞"	A242	0.98	4⅜"	A242	0.98	2'-9½"

CHECK DIMENSION FOR TRUSS FAB

LOCATION OF TRANS TRUSS				
CL-1	CL-2	CL-3	CL-4	Fs
12'-10½"	26'-2½"	—	—	5'-2½"

CORE END

EL END	TRUSS DESIGNATION	BEARING ANGLES				WEv	DIAGONAL "Tv" STRUT				VERTICAL "ST" STRUT				END STIFFENER MK. V1			MK. V2			MK. V4			WEB "DS10"					WEB "DS5"					DOUBLE STRUT "DS2"				
		MK	TYPE STEEL	CHORD SIZE	LENGTH		MK	TYPE STEEL	DIA	LENGTH	MK	TYPE STEEL	DIA	LENGTH	TYPE STEEL	DIA	LENGTH	TYPE STEEL	DIA	LENGTH	TYPE STEEL	DIA	LENGTH	MK	TYPE STEEL	PCS	DIA	LENGTH	MK	TYPE STEEL	PCS	DIA	LGT.	MK	PCS	TYPE STEEL	DIA	LENGTH
	C32T13-358	9v	A242	2"×1½"×0.25	10"	2'-8¼"	10	A242	0.98	3'-6¼"	5	A242	0.98	2'-7⅞"	A242	0.98	4⅜"	A242	0.98	7⅜"	—	—	—	—	—	—	—	—	—	—	—	—	—	DS2	2	A242	.75	2'-8½"

STEEL TRUSS DETAILS
FOR
WORLD TRADE CENTER - N Y C
FOR
THE PORT OF NEW YORK AUTHORITY

FLOOR TRUSS C32T13 35'-8" OVERALL
WORLD TRADE CENTER TOWERS A-B

FABRICATION BY LACLEDE STEEL COMPANY

FABRICATED AT: MADISON, ILLINOIS		DESIGN DRAWING NO 7-A81-12	PLATE
APPROVED FOR FABRICATION BY JW FOR P.O.N.Y.A.	DATE 6/25/68	DRAWN BY [illegible] DATE FEB. 24, 1968	1
APPROVED FOR FABRICATION BY ____ FOR FABRICATOR	DATE ____	CHECKED BY J.R. PAUL DATE FEB. 24, 1968	IN CHARGE OF PROD. DEV.
DETAILED BY A.C. WEBER		FABRICATION CONT. NO. WTC 221	SHEET NO ST213

FABRICATION REQUIRMENTS	DESIGN	TOLERANCE
CAMBER AT MIDSPAN	9/8"	± 3/8"
DESIGN DEPTH	29"	± 1/4"
PANEL "K"	3'-4"	± 1/4"
OVERALL LENGTH	35'-8	± 3/8"
WEB DEPTH	3 "	± 1/4"

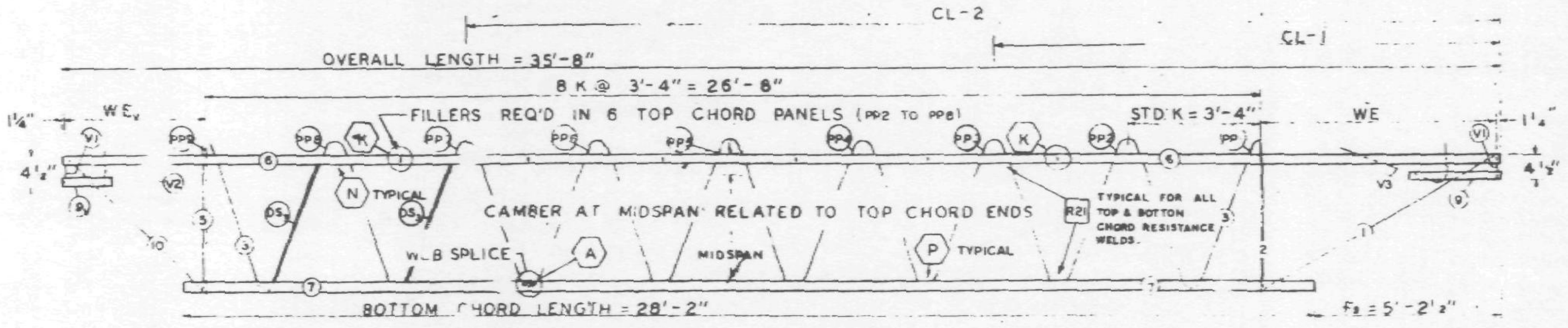

El END (CORE) TRUSS ELEVATION Es END (COLUMN)

ALL PANEL POINTS RESISTANCE WELDED (x).
ARC WELDS INDICATED AT SHADED AREAS AND AT BOTTOM CHORD WEB SPLICES.
ALL WELD DETAILS SHOWN ON SHEETS ST290 AND ST291.
SEE SHEET ST295 FOR V1, V2, & V3 DETAILS.
LETTERS IN HEXAGON INDICATE WELD DETAIL, ie., (A).
LETTERS AND NUMBERS IN SQUARES INDICATE RESISTANCE WELD STRENGTH IDENTIFIED IN THE QUALITY CONTROL PROGRAM, ie., R21.

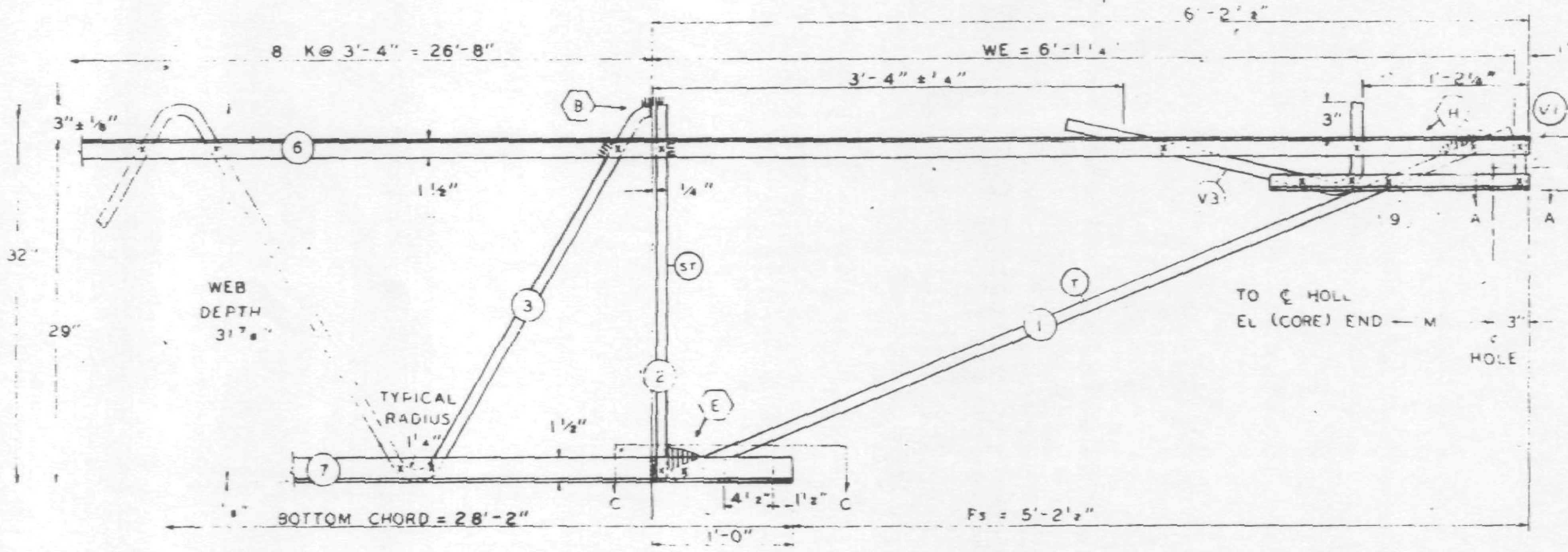

Es END (COLUMN)

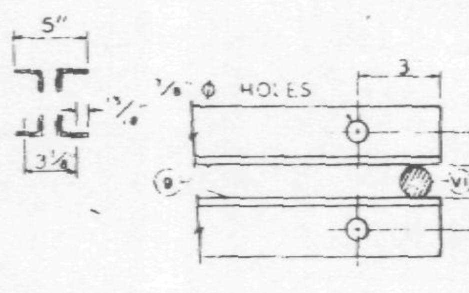

SECTION A-A

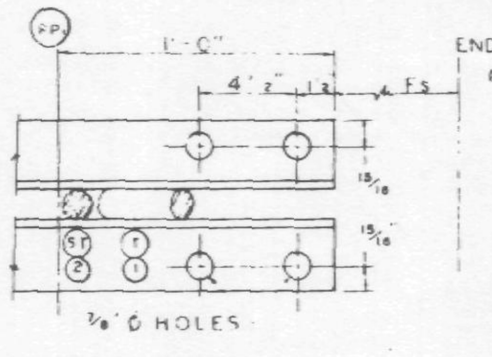

SECTION C-C

DAMPING UNIT CONNECTION PLATE ATTACHED TO BOTTOM CHORD (COL END) IN FIELD ASSEMBLY BY CONTRACT WTC 223.00.

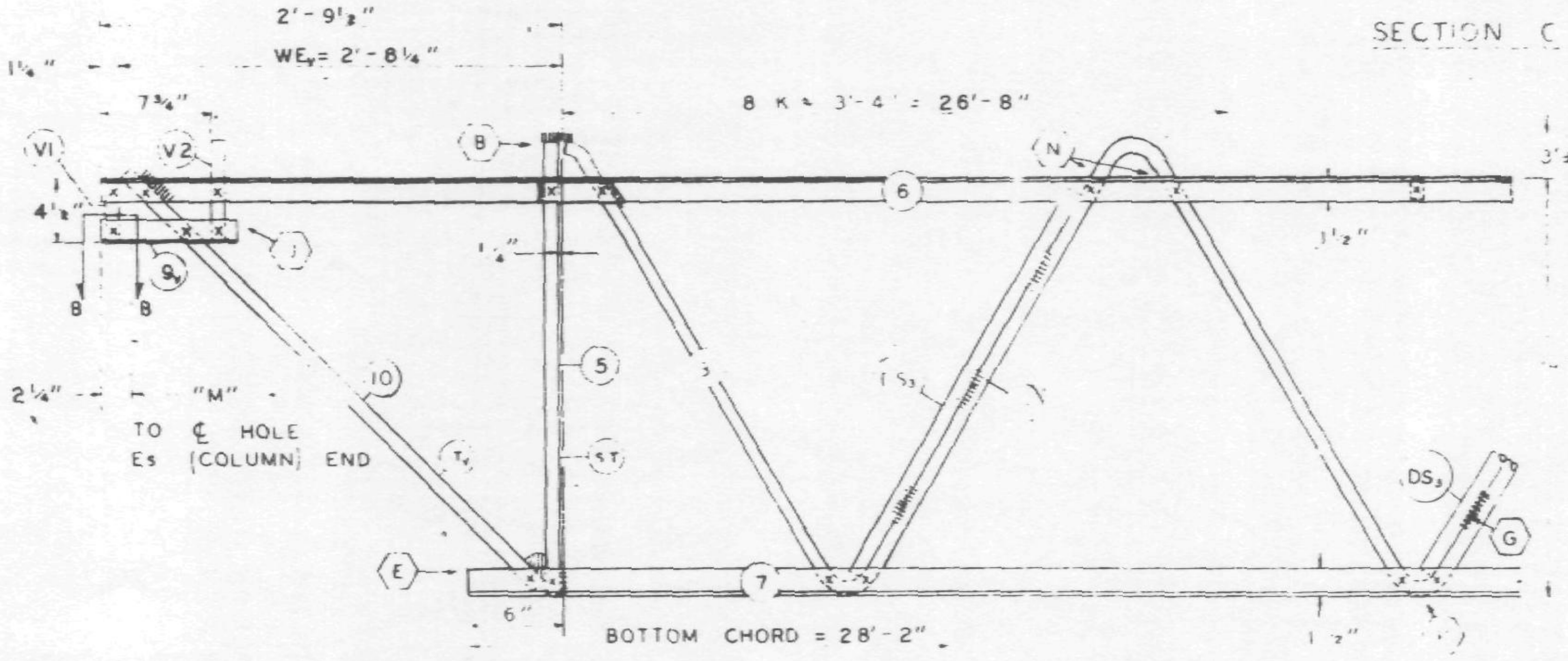

El END (CORE)

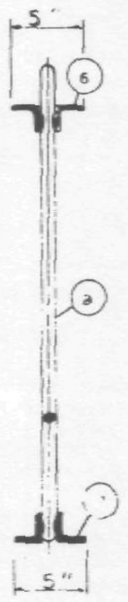

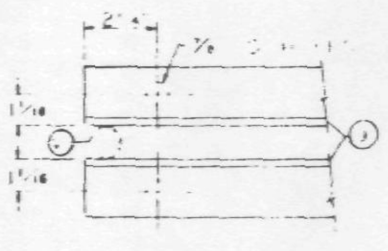

REF DRWGS

7-A81-12	4-1-68
7-A81-52	2-15-68
7-A84-50 & 50.2	10-20-67
7-A81-53	4-1-68
7-A84-50.5	10-20-67

PAINT
LACLEDE ELECTROCOAT
RED NO [illegible]

TRUSS DESIGNATION	TOP CHORD TWO ANGLES				BOTTOM CHORD TWO ANGLES				MAIN WEB "W"					FILLER		"M" ℄ HOLES	TRUSS	
	MK	TYPE STEEL	CHORD SIZE	LENGTH	MK	TYPE STEEL	CHORD SIZE	LENGTH	MK	TYPE STEEL	DIA	LENGTH	NO OF K	NO	DIA			
C32T13-358	6	A24.	2"x1½"x025	35'-8"	7	A242	2"x1½"x025	28'-2"	3	A242	098	49'-10"	8 @ 3'-4" = 26'-8"	6	058	35'-2¾"		

COLUMN END

Es END	TRUSS DESIGNATION	BEARING ANGLES				WE	DIAGONAL "T" STRUT				VERTICAL "ST" STRUT				END STIFFENER MK V1			MK V3		
		MK	TYPE STEEL	CHORD SIZE	LENGTH		MK	TYPE STEEL	DIA	LENGTH	MK	TYPE STEEL	DIA	LENGTH	TYPE STEEL	DIA	LENGTH	TYPE STEEL	DIA	LENGTH
	C32T13-358	9	A242	2"x1½"x025	[illegible]	6'-1¼"		A242	098	[illegible]	2	A242	098	2'-7⅜"	A242	098	4⅜		098	2'-9½"

DECK DIMENSIONS FOR TRUSS FAB LOCATION OF TRANS TRUSS				
[illegible]	[illegible]	[illegible]	4	Fs
12'-10½"	26'-2½"	—	—	5'-2½"

CORE END

El END	TRUSS DESIGNATION	BEARING ANGLES				WEv	DIAGONAL "Tv" STRUT				VERTICAL "ST" STRUT				END STIFFENER MK V1			MK V2			MK V4			WEB "DS10"					WEB "DS5"					DOUBLE STRUT DS3				
		MK	TYPE STEEL	CHORD SIZE	LENGTH		MK	TYPE STEEL	DIA	LENGTH	MK	TYPE STEEL	DIA	LENGTH	TYPE STEEL	DIA	LENGTH	TYPE STEEL	DIA	LENGTH	TYPE STEEL	DIA	LENGTH	MK	TYPE STEEL	PCS	DIA	LENGTH	MK	TYPE STEEL	PCS	DIA	LGT.	MK	PCS	TYPE STEEL	DIA	LENGTH
	C32T13-358	9v	A242	2"x1½"x025	10"	2'-8¼"	10	A242	098	3'-6¼"	5	A242	0.98	2'-7⅞"	A242	0.98	4⅜"	A242	098	7⅜"	—	—	—	—	—	—	—	—	—	—	—	—	—	DS3	2	A242	.75	2'-8½"

STEEL TRUSS DETAILS
FOR
WORLD TRADE CENTER - N Y C
FOR
THE PORT OF NEW YORK AUTHORITY

FLOOR TRUSS C32T13 35'-8" OVERALL
WORLD TRADE CENTER TOWERS A-B

FABRICATION BY LACLEDE STEEL COMPANY			
FABRICATED AT MADISON, ILLINOIS		DESIGN DRAWING NO 7-A81-12	PLATE
APPROVED FOR FABRICATION BY [illegible] FOR PONYA	DATE 4/26/68	DRAWN BY [illegible] DATE FEB 24, 1968	
APPROVED FOR FABRICATION BY FOR FABRICATOR	DATE	CHECKED BY J R PAUL DATE FEB 24, 1968	IN CHARGE OF PROD DEV
DETAILED BY A C WEBER		FABRICATION CONT NO WTC 221	SHEET NO ST213

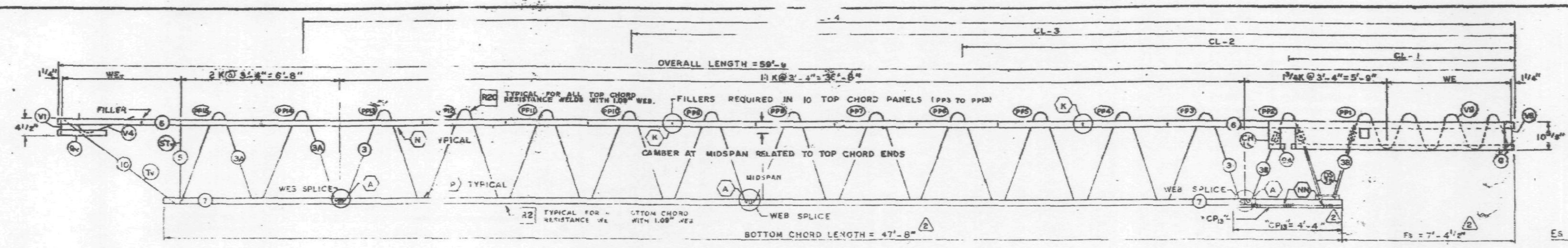

TRUSS ELEVATION

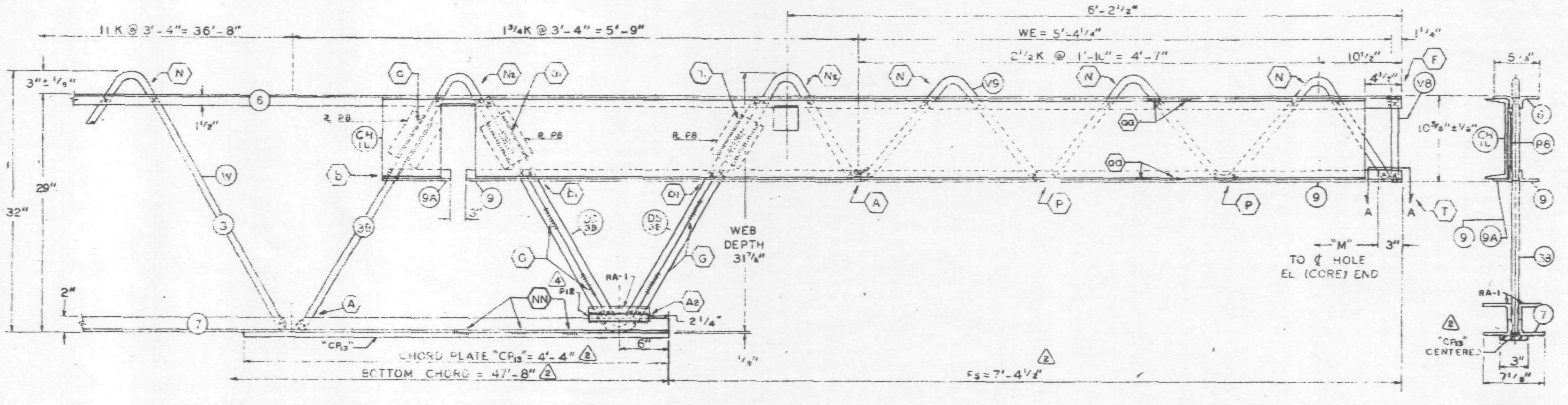

Es END (COLUMN)

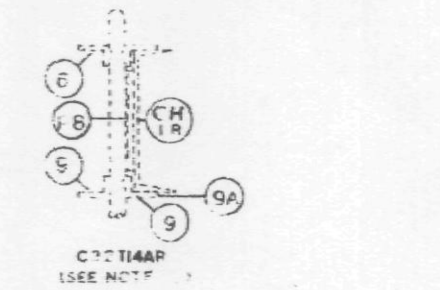

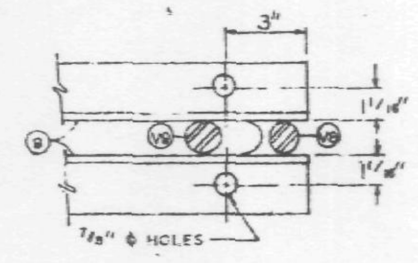

SECTION A-A

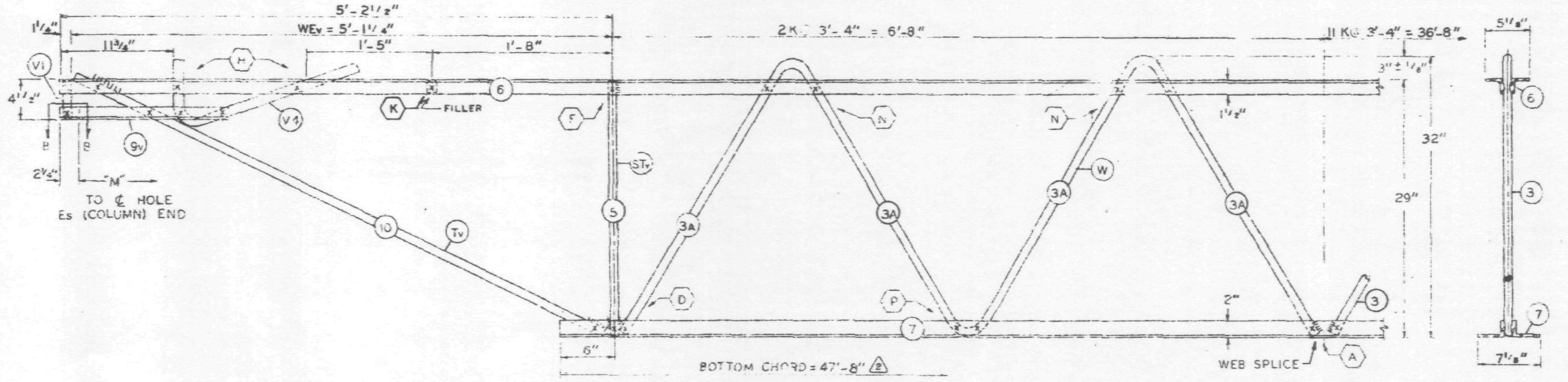

EL END (CORE)

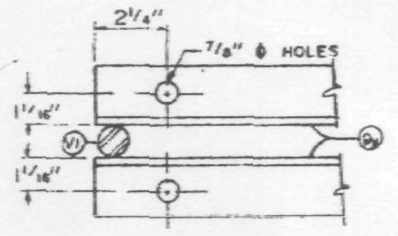

SECTION B-B

FABRICATION REQUIREMENTS	DESIGN	TOLERANCE
CAMBER AT MIDSPAN	2"	±3/8"
DESIGN DEPTH	29"	±1/4"
PANEL "K"	3'-4"	±1/4"
OVERALL LENGTH	59'-9"	±3/8"
WEB DEPTH	31 7/8"	4"

ALL PANEL POINTS RESISTANCE WELDED. (x).
ARC WELDS INDICATED AT SHADED AREAS AND AT BOTTOM CHORD WEB SPLICES.
LETTERS IN HEXAGON INDICATE WELD DETAIL, ie., (A).
LETTERS AND NUMBERS IN SQUARES INDICATE RESISTANCE WELD STRENGTH IDENTIFIED IN THE QUALITY CONTROL PROGRAM, ie., R1.
ALL WELD DETAILS SHOWN ON SHEETS ST290, ST291, ST293 AND ST283.
ALL CHANNEL DETAILS SHOWN ON SHEET ST407.
CHORD PLATE DETAILS SHOWN ON SHEET ST283.
SEE SHEET ST295 FOR V1 & V4 DETAILS.

NOTE #2

ALL DETAILS & ELEVATIONS SHOWN FOR C32T14AL TRUSSES ARE APPLICABLE TO C32T14AR TRUSSES WITH CHANNEL CH1R AND BEARING ANGLE 9A PLACED ON OPP. HAND AS SHOWN.

NO.	DATE	REVISION	BY
4	12-10-68	AS NOTED	JDC.
3	11-7-68	AS NOTED	G.D.C.
2	10-17-68	AS NOTED	LWH
1	10-3-68	GENERAL	G.D.C.

(4) REF. DRWG.

7-AB1-13	10-4-68
7-AB1-54	11-25-68
7-AB1-53	7-22-68
7-AB3-2	1-3-68
7-AB3-24	8-15-68
7-AB4-17,17.2	10-4-68
SA-124	10-11-68
7-AB1-55	10-15-68

PAINT
LACLEDE ELECTROCOAT
RED NO. 10001

TRUSS DESIGNATION	TOP CHORD TWO ANGLES				BOTTOM CHORD TWO ANGLES				MAIN WEB "W"					FILLER		"M" C/C HOLES	CHORD PLATE				TRUSS DATA	CHANNEL PLATES					REINFORCING ANGLES (4)				SPECIAL PLATES			
	MK.	TYPE STEEL	CHORD SIZE	LENGTH	MK.	TYPE STEEL	CHORD SIZE	LENGTH (2)	MK.	TYPE STEEL	DIA.	LENGTH	NO. OF K	NO.	DIA.		MK.	TYPE STEEL	SIZE	LENGTH		MK.	TYPE STEEL	PCS.	SIZE	LENGTH	MK.	TYPE STEEL	ANGLE SIZE	(2 REQ'D) LENGTH	MK.	TYPE STEEL	SIZE	(2 REQ'D) LENGTH
C32T14AL-599	6	A242	2"x1 1/2"x.25"	59'-9"	7	A36	3"x2"x.37"	47'-8"	3 3A 3B	A36 A242 A242	1.02 1.14 1.14	[illegible] [illegible] 10'-7 3/8"	11 K @ 3'-4" = 36'-8" 2 K @ 3'-4" = 6'-8" 1 3/4 K @ 3'-4" = 5'-9"	11	1.09	59'-3 3/4"	—	—	—	—		P6	A36	3	4 1/2"x.39"	5 1/2"	RA1	A36	3"x2"x.37"	7 1/2"	P12	A36	1"x3/8"	7 1/2"

COLUMN END

Es END TRUSS DESIGNATION	BEARING ANGLES					WE	DOUBLE STRUT				CHORD PLATE (2)				END STIFFENER MK. V8			MK. V9			MK. V10			CHANNEL (SEE NOTE 2)			
	MK.	TYPE STEEL	CHORD SIZE	PCS.	LENGTH		MK.	TYPE STEEL	DIA.	LENGTH (2 REQ'D)	MK.	TYPE STEEL	SIZE	LENGTH	TYPE STEEL	DIA.	LENGTH	TYPE STEEL	DIA.	LENGTH	TYPE STEEL	DIA.	LENGTH	MK.	TYPE STEEL	CHANNEL SIZE	LENGTH
C32T14AL-599	9 9A	A242 A242	2"x1 1/2"x.25" 2"x1 1/2"x.25"	—	8'-5" 8 1/2"	5'-4 1/4"	DS 3B	A242	1.14	2'-6 3/4"	CP13	A36	3"x.25	4'-4"	A242	1.14	10 1/2"	A242	1.14	8'-3 1/8"	—	—	—	CH1L CH1R	A36 A36	10 [30 10 [30	10'-0" 10'-0"

CORE END

EL END TRUSS DESIGNATION	BEARING ANGLES				WEv	DIAGONAL "Tv" STRUT				VERTICAL "STv" STRUT				STIFFENER MK. V1			MK. V2			MK. V4			DOUBLE STRUT				DOUBLE STRUT			
	MK.	TYPE STEEL	CHORD SIZE	LENGTH		MK.	TYPE STEEL	DIA.	LENGTH	MK.	TYPE STEEL	DIA.	LENGTH	TYPE STEEL	DIA.	LENGTH	TYPE STEEL	DIA.	LENGTH	TYPE STEEL	DIA.	LENGTH	MK.	TYPE STEEL	DIA.	LENGTH	MK.	TYPE STEEL	DIA.	LENGTH
C32T14AL-599	9v	A242	2"x1 1/2"x.25"	1'-7"	5'-1 1/4"	10	A242	1.14	5'-6 1/2"	5	A242	1.14	2'-4 7/8" (3)	A242	1.14	4 3/8"	—	—	—	A242	1.14	2'-2 1/2"	—	—	—	—	—	—	—	—

CHECK DIMENSION FOR TRUSS FAB.

LOCATION OF TRANS. TRUSS				
CL-1	CL-2	CL-3	CL-4	Fs
9'-6 1/2"	22'-10 1/2"	36'-2 1/2"	49'-6 1/2"	7'-4 1/2"

FLOOR TRUSS DETAILS
FOR
WORLD TRADE CENTER - N.Y.C.
FOR
THE PORT OF NEW YORK AUTHORITY

FLOOR TRUSS C32T14AL x 59'-9" LONG (SEE NOTE #2)
WORLD TRADE CENTER TOWERS A & B

FABRICATION BY LACLEDE STEEL COMPANY

FABRICATED AT MADISON, ILLINOIS		DESIGN, DRAWING NO. 7-AB1-13	PLATE
APPROVED FOR FABRICATION BY James White FOR P.O.N.Y.A.	DATE 12/16/68	DRAWN BY: gdc DATE SEPT. 9, 1968	
APPROVED FOR FABRICATION BY FOR FABRICATOR	DATE	CHECKED BY: T.M.CHURA DATE SEPT. 9, 1968	IN CHARGE OF PROD. DEV.
DETAILED LACLEDE STEEL CO.		FABRICATION CONT. NO. W.T.C. 221	SHEET NO. ST 214AL

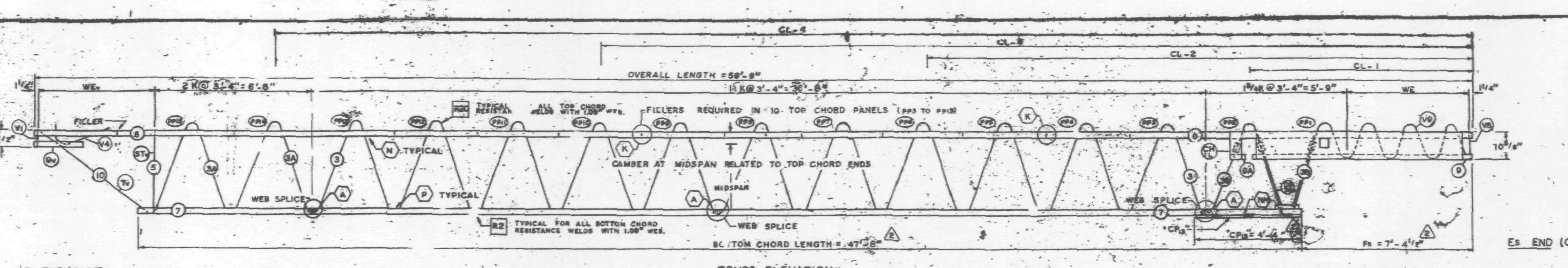

EL END (CORE) — TRUSS ELEVATION — Es END (COLUMN)

FABRICATION REQUIREMENTS	DESIGN	TOLERANCE
CAMBER AT MIDSPAN	2"	±3/8"
DESIGN DEPTH	29"	±1/4"
PANEL "K"	3'-4"	±1/4"
OVERALL LENGTH	59'-9"	±3/8"
WEB DEPTH	31 7/8"	±1/4"

ALL PANEL POINTS RESISTANCE WELDED. (X).
ARC WELDS INDICATED AT SHADED AREAS AND AT BOTTOM CHORD WEB SPLICES.
LETTERS IN HEXAGON INDICATE WELD DETAIL, ie., (A).
LETTERS AND NUMBERS IN SQUARES INDICATE RESISTANCE WELD STRENGTH IDENTIFIED IN THE QUALITY CONTROL PROGRAM, ie., [RI].
ALL WELD DETAILS SHOWN ON SHEETS ST290, ST291, ST 293 AND ST 283.
ALL CHANNEL DETAILS SHOWN ON SHEET ST 407.
CHORD-PLATE DETAILS SHOWN ON SHEET ST 283.
SEE SHEET ST 295 FOR V1 & V4 DETAILS.

NOTE #2

ALL DETAILS & ELEVATIONS SHOWN FOR C32T14AL TRUSSES ARE APPLICABLE TO C32T14AR. TRUSSES WITH CHANNEL CH1R AND BEARING ANGLE 9A PLACED ON OPP. HAND AS SHOWN.

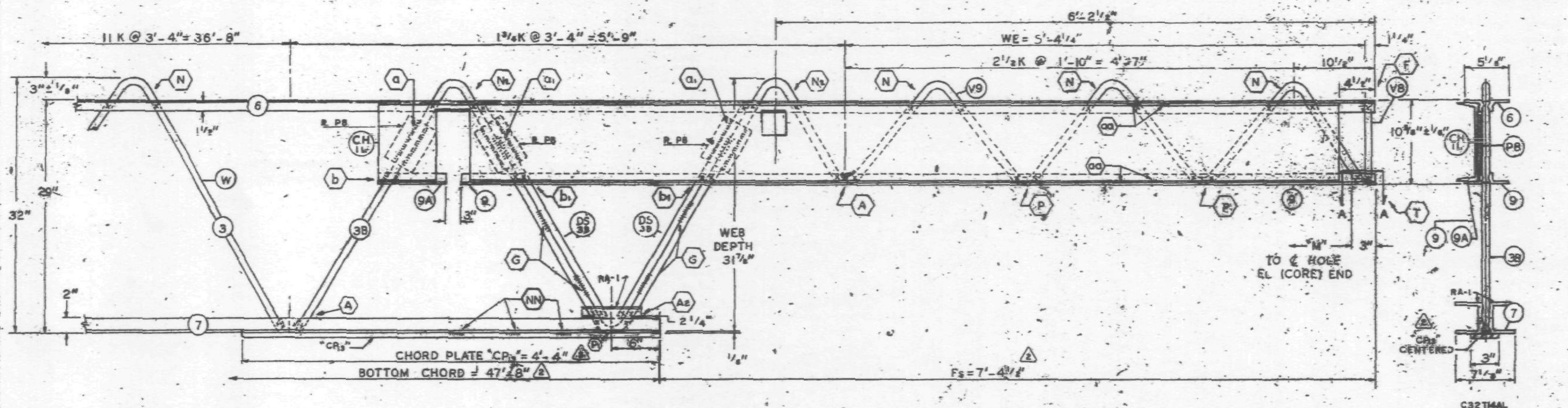

Es END (COLUMN)

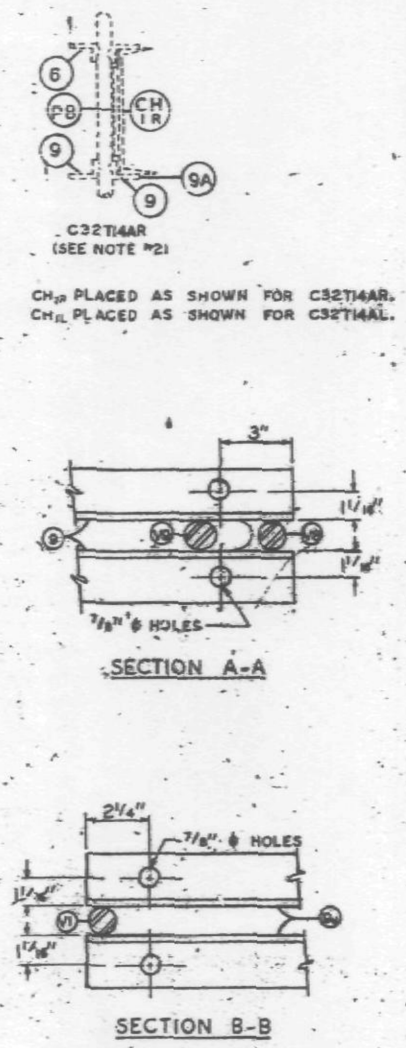

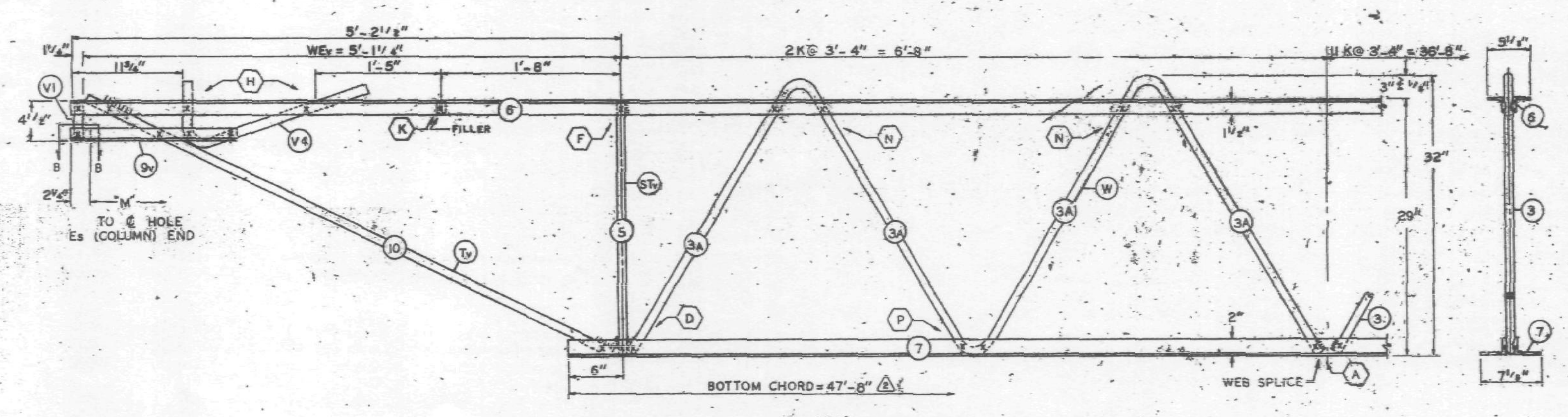

EL END (CORE)

NO.	DATE	REVISION	BY
2	10-17-68	AS NOTED	LWH
1	10-1-68	GENERAL	S.D.C.

REF. DRWG.	
7-A81-13	8-15-68
7-A81-54	8-15-68
7-A81-53,55	7-22-68
7-A83-2	1-3-68
7-A83-24	8-15-68
7-A84-17,17.2	8-15-68
SA-124	8-1-68

TRUSS DESIGNATION	TOP CHORD TWO ANGLES MK.	TYPE STEEL	CHORD SIZE	LENGTH	BOTTOM CHORD TWO ANGLES MK.	TYPE STEEL	CHORD SIZE	LENGTH	MAIN WEB "W" MK.	TYPE STEEL	DIA.	LENGTH	NO. OF K	FILLER NO.	DIA.	"M" C/C HOLES	CHORD PLATE MK.	TYPE STEEL	SIZE	LENGTH	TRUSS DATA		CHANNEL PLATES MK	TYPE STEEL	PCS.	SIZE	LENGTH	REINFORCING ANGLES (2 REQ'D) MK	TYPE STEEL	SIZE	LENGTH
C32T14AL-599	6	A242	2"x 1 1/2"x .25"	59'-9"	7	A36	3"x 2"x .37"	47'-8"	4 3A 3B	A36 A242 A242	1.09 1.14 1.14	88'-6 1/4" [illegible] 10'-7 7/8"	11 K @ 3'-4" = 36'-8" 2 K @ 3'-4" = 6'-8" 1 3/4 K @ 3'-4" = 5'-9"	11	1.09	59'-3 3/4"	—	—	—	—			P8	A36	3	[illegible]	5 1/4"	[illegible]	A36	[illegible]	7 1/2"

COLUMN END

Es END TRUSS DESIGNATION	BEARING ANGLES MK.	TYPE STEEL	CHORD SIZE	PCS.	LENGTH	WE	DOUBLE STRUT MK.	TYPE STEEL	DIA.	LENGTH (2 REQ'D)	CHORD PLATE MK.	TYPE STEEL	SIZE	LENGTH	END STIFFENER MK. V8 TYPE STEEL	DIA.	LENGTH	MK. V9 TYPE STEEL	DIA.	LENGTH	MK. V10 TYPE STEEL	DIA.	LENGTH	CHANNEL (SEE NOTE #2) MK.	TYPE STEEL	CHANNEL SIZE	LENGTH
C32T14AL-599	9 9A	A242 A242	2"x 1 1/2"x .25" 2"x 1 1/2"x .25"	2 1	[illegible] 8 1/2"	5'-4 1/4"	DS	A242	1.14	2'-6 3/4"	CP3	A36	3"x .25	4'-4"	A242	1.14	10 1/2"	A242	1.14	8'-3 7/8"	—	—	—	CH1L CH1R	A36 A36	10 C 30 10 C 30	[illegible] [illegible]

CHECK DIMENSION FOR TRUSS FAB.

LOCATION OF TRANS. TRUSS				
CL-1	CL-2	CL-3	CL-4	Fs
9'-8 1/2"	22'-10 1/2"	36'-2 1/2"	49'-6 1/2"	7'-4 1/8"

CORE END

EL END TRUSS DESIGNATION	BEARING ANGLES MK.	TYPE STEEL	CHORD SIZE	LENGTH	WEv	DIAGONAL "Tv" STRUT MK.	TYPE STEEL	DIA.	LENGTH	VERTICAL "STv" STRUT MK.	TYPE STEEL	DIA.	LENGTH	END STIFFENER MK. V1 TYPE STEEL	DIA.	LENGTH	MK. V2 TYPE STEEL	DIA.	LENGTH	MK. V4 TYPE STEEL	DIA.	LENGTH	DOUBLE STRUT MK.	TYPE STEEL	DIA.	LENGTH	DOUBLE STRUT MK.	TYPE STEEL	DIA.	LENGTH
C32T14AL-599	9v	A242	2"x 1 1/2"x .25"	1'-7"	5'-1 1/2"	10	A242	1.14	5'-6 3/4"	5	A242	1.14	2'-4 3/4"	A242	1.14	4 3/8	—	—	—	A242	1.14	2'-2 3/4"	—	—	—	—	—	—	—	—

PAINT
LACLEDE ELECTROCOAT
RED NO. 10001

FLOOR TRUSS DETAILS
FOR
WORLD TRADE CENTER - N.Y.C.
FOR
THE PORT OF NEW YORK AUTHORITY

FLOOR TRUSS C32T14AL x 59'-9" LONG (SEE NOTE #2)
WORLD TRADE CENTER TOWERS A & B

FABRICATION BY: LACLEDE STEEL COMPANY
FABRICATED AT: MADISON, ILLINOIS
DESIGN DRAWING NO. 7-A81-13
PLATE
APPROVED FOR FABRICATION FOR P.O.N.Y.A. BY: James White — DATE 10/23/68
DRAWN BY: gdc — DATE SEPT. 9, 1968
APPROVED FOR FABRICATION BY: FOR FABRICATOR — DATE
CHECKED BY: T.M. CHURA — DATE SEPT. 9, 1968
IN CHARGE OF PROD. DEV.
DETAILED BY: A CARL WEBER
FABRICATION CONT. NO W.T.C. 221
SHEET NO. ST 214AL

[redacted]

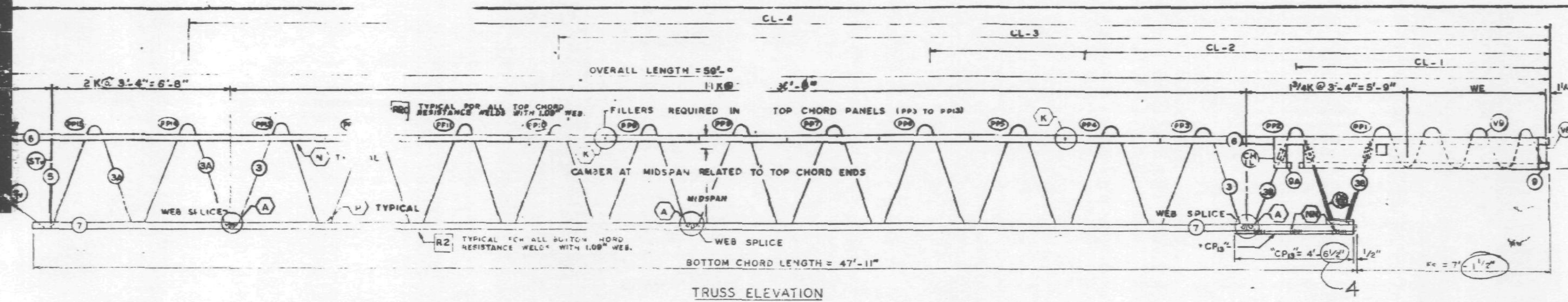

EL END (CORE)

TRUSS ELEVATION

Es END (COLUMN)

FABRICATION REQUIREMENTS	DESIGN	TOLERANCE
CAMBER AT MIDSPAN	2"	± 3/8"
DESIGN DEPTH	29"	± 1/4"
PANEL "K"	3'-4"	± 1/4"
OVERALL LENGTH	59'-9"	± 3/8"
WEB DEPTH	31 7/8"	± 1/4"

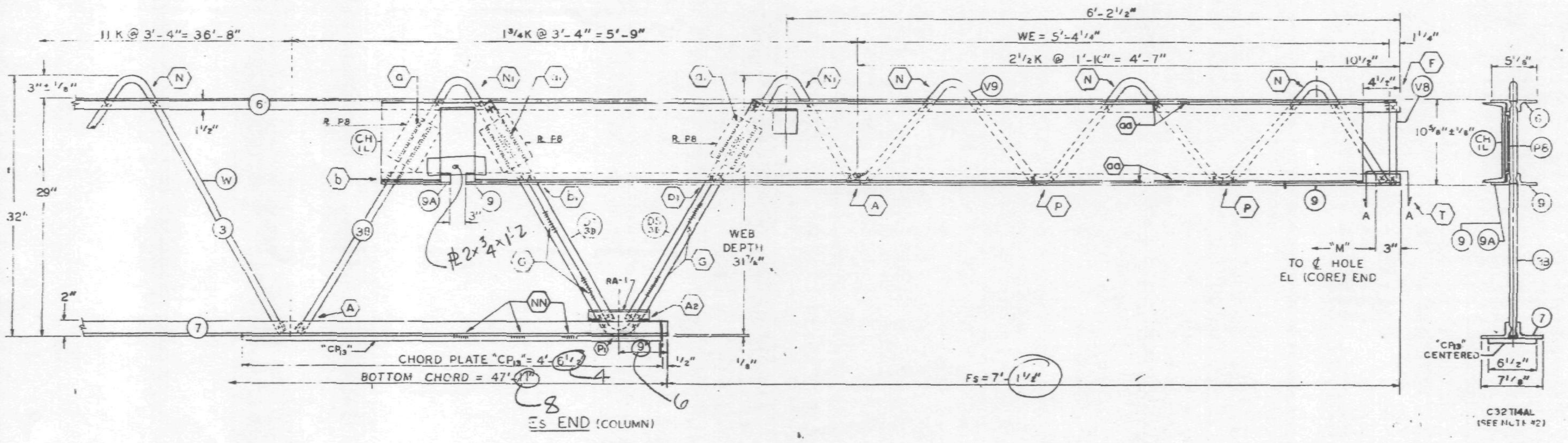

Es END (COLUMN)

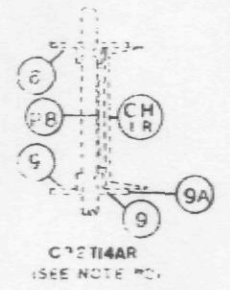

CH15 PLACED AS SHOWN FOR C32T14AR.
CH16 PLACED AS SHOWN FOR C32T14AL.

C32T14AL (SEE NOTE #2)

ALL PANEL POINTS RESISTANCE WELDED ... ARC WELDS INDICATED AT SHADED AREAS AND AT BOTTOM CHORD WEB SPLICES. LETTERS IN HEXAGON INDICATE WELD DETAIL, ie., (A). LETTERS AND NUMBERS IN SQUARES INDICATE RESISTANCE WELD STRENGTH IDENTIFIED IN THE QUALITY CONTROL PROGRAM, ie., [RI]. ALL WELD DETAILS ... SHEETS ST290, ST291, ST 293 AND ST 283. ALL CHANNEL ... SHOWN ON SHEET ST 407. ... SHOWN ON SHEET ST 283. SEE SHEET ST 295 FOR V1 & V4 DETAILS.

NOTE #2

ALL DETAILS & ELEVATIONS SHOWN FOR C32T14AL TRUSSES ARE APPLICABLE TO C32T14AR TRUSSES WITH CHANNEL CH18 AND BEARING ANGLE 9A PLACED ON OPP. SIDE AS SHOWN.

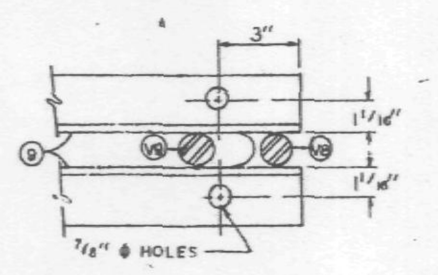

SECTION A-A

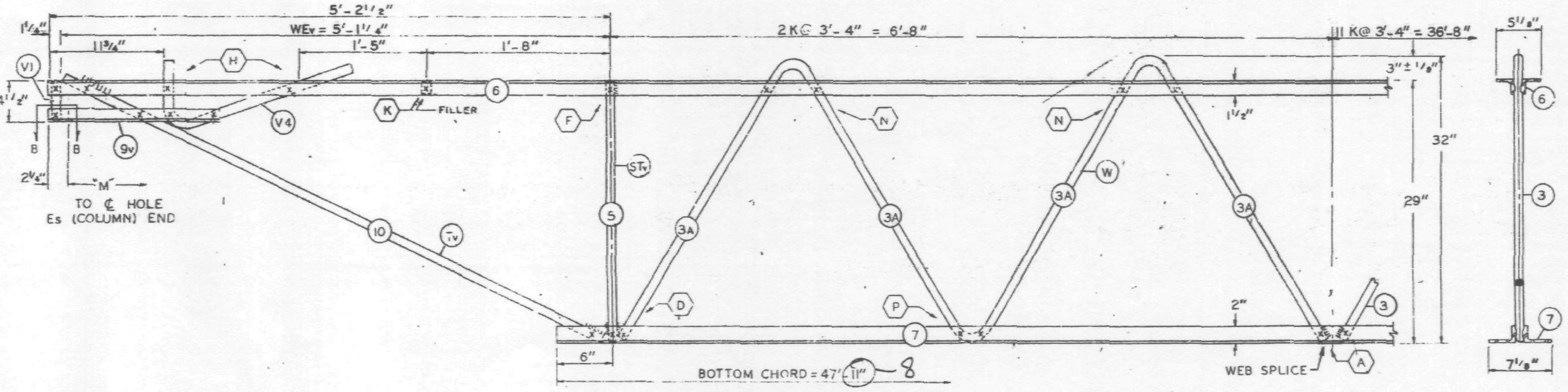

EL END (CORE)

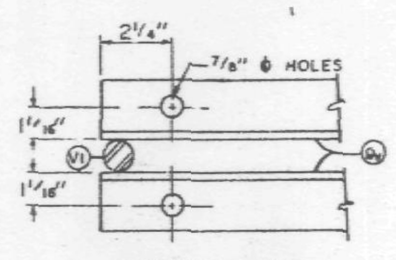

SECTION B-B

NO.	DATE	REVISION	BY
1	10-3-67	GENERAL	G.D.C.

REF. DRWG.	
7-A81-13	8-15-68
7-A81-54	8-15-68
7-A81-53,55	7-22-68
7-A83-2	1-3-68
7-A83-24	8-15-68
7-A84-17,17.2	8-15-68
SA-124	8-1-68

10/15/68 SK

PAINT

LACLEDE ELECTROCOAT
RED NO. 10001

TRUSS DESIGNATION	TOP CHORD TWO ANGLES MK	TYPE STEEL	CHORD SIZE	LENGTH	BOTTOM CHORD TWO ANGLES MK	TYPE STEEL	CHORD SIZE	LENGTH	MAIN WEB "W" MK	TYPE STEEL	DIA.	LENGTH	NO OF K	FILLER NO.	DIA.	"M" C/C HOLES	CHORD PLATE MK	TYPE STEEL	SIZE	LENGTH	TRUSS DATA		CHANNEL PLATES MK	TYPE STEEL	PCS.	SIZE	LENGTH	REINFORCING ANGLES (2 REQ'D) MK	TYPE STEEL	SIZE	LENGTH
C32T14AL-599	6	A242	2"x 1 1/2"x .25"	59'-9"	7	A36	3"x 2"x .37"	47'-11" (8)	3 / 3A / 3B	A36 / A242 / A242	.09 / 1.14 / 1.14	88'-6 1/4" / 12'-5 1/2" / 10'-7 7/8"	11 K@ 3'-4" = 36'-8" / 2K@ 3'-4" = 6'-8" / 1 3/4K@ 3'-4" = 5'-9"	11	1.09	59'-3 3/4"	—	—	—	—			P8	A36	3	4 1/2" .39"	5 1/2"	RA-1	A242	2"x 1 1/2"x .25 (3 x 2 x .37)	7 1/2"

COLUMN END Es END TRUSS DESIGNATION	BEARING ANGLES MK.	TYPE STEEL	CHORD SIZE	PCS.	LENGTH	WE	DOUBLE STRUT MK.	TYPE STEEL	DIA.	LENGTH (2 REQ'D)	CHORD PLATE MK.	TYPE STEEL	SIZE	LENGTH	END STIFFENER MK. V8 TYPE STEEL	DIA.	LENGTH	MK. V9 TYPE STEEL	DIA.	LENGTH	MK. V10 TYPE STEEL	DIA.	LENGTH	CHANNEL (SEE NOTE #2) MK.	TYPE STEEL	CHANNEL SIZE	LENGTH
C32T14AL-599	9 / 9A	A242 / A242	2"x 1 1/2"x .25" / 2"x 1 1/2"x .25"	2 / 1	9'-5" / 8 1/2"	5'-4 1/4"	DS13	A242	1.14	2'-6 3/4"	CP13	A36	6 1/2"x 3/4" (3x.25)	4'-6 1/2" (4)	A242	1.14	10 1/2"	A242	1.14	8'-3 1/8"	—	—	—	CH15 / CH16	A36 / A36	10 [30 / 10 [30	10'-0" / 10'-0"

CORE END Ec END TRUSS DESIGNATION	BEARING ANGLES MK.	TYPE STEEL	CHORD SIZE	LENGTH	WEv	DIAGONAL "Tv" STRUT MK.	TYPE STEEL	DIA.	LENGTH	VERTICAL "STv" STRUT MK.	TYPE STEEL	DIA.	LENGTH	END STIFFENER MK. V1 TYPE STEEL	DIA.	LENGTH	TYPE STEEL	DIA.	LENGTH	MK. V4 TYPE STEEL	DIA.	LENGTH	DOUBLE STRUT MK.	TYPE STEEL	DIA.	LENGTH	DOUBLE STRUT MK.	TYPE STEEL	DIA.	LENGTH
C32T14AL-599	9v	A242	2"x 1 1/2"x .25"	1'-7"	5'-1 1/4"	10	A242	1.14	5'-6 1/2"	5	A242	1.14	2'-4 3/4"	A242	1.14	4 3/8"	—	—	—	A242	1.14	2'-2 1/2"	—	—	—	—	—	—	—	—

CHECK DIMENSION FOR TRUSS FAB.

LOCATION OF TRANS. TRUSS				
CL-1	CL-2	CL-3	CL-4	Fs
9'-6 1/2"	22'-10 1/2"	36'-2 1/2"	49'-6 1/2"	7'-4 1/2"

FLOOR TRUSS DETAILS
FOR
WORLD TRADE CENTER - N.Y.C.
FOR
THE PORT OF NEW YORK AUTHORITY

FLOOR TRUSS C32T14AL x 59'-9" LONG (SEE NOTE #2)
WORLD TRADE CENTER TOWERS A & B

FABRICATION BY LACLEDE STEEL COMPANY

FABRICATED AT MADISON, ILLINOIS		DESIGN DRAWING NO. 7-A81-13	PLATE
APPROVED FOR FABRICATION BY ____ FOR P.O.N.Y.A.	DATE	DRAWN BY gdc DATE SEPT. 9, 1968	
APPROVED FOR FABRICATION BY ____ FOR FABRICATOR	DATE	CHECKED BY T.M.CHURA DATE SEPT. 9, 1968	IN CHARGE OF PROD. DEV.
DETAILED BY A. CARL WEBER		FABRICATION CONT. NO. W.T.C. 221	SHEET NO. ST 214AL

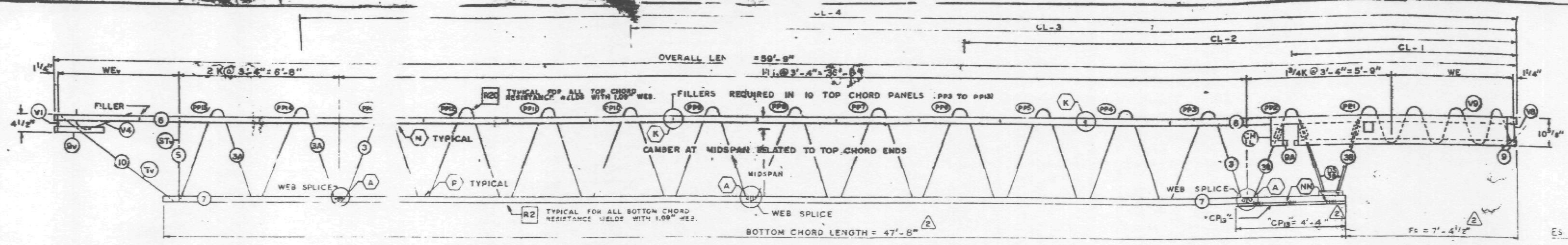

EL END (CORE)

TRUSS ELEVATION

Es END (COLUMN)

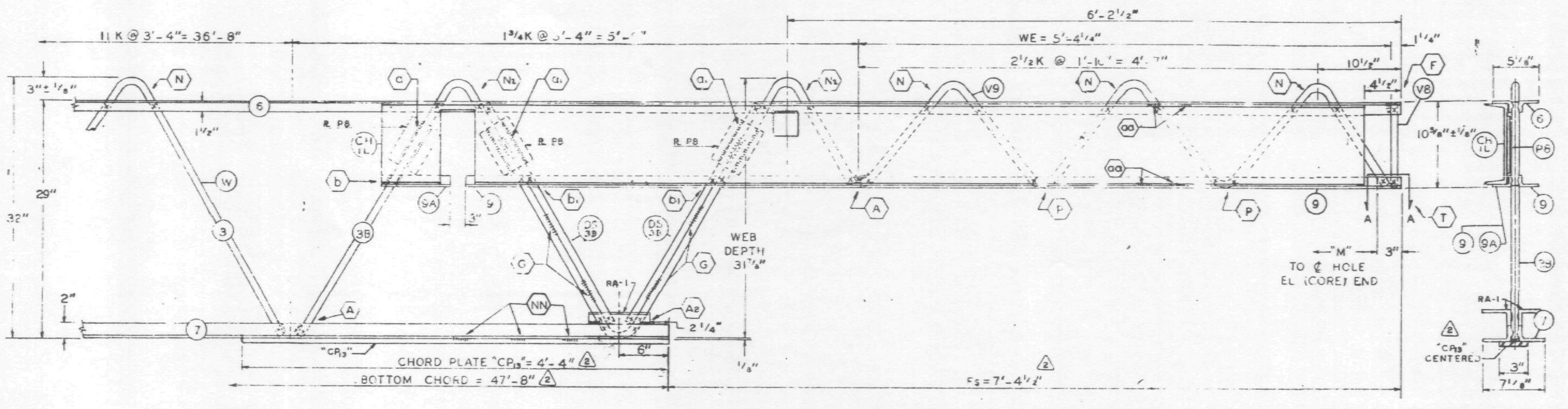

Es END (COLUMN)

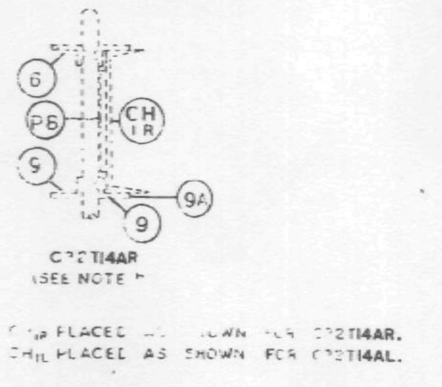

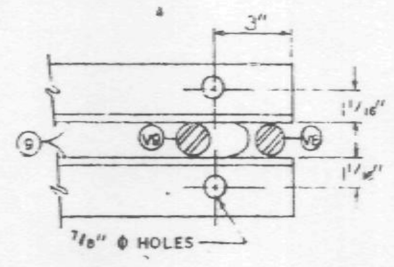

SECTION A-A

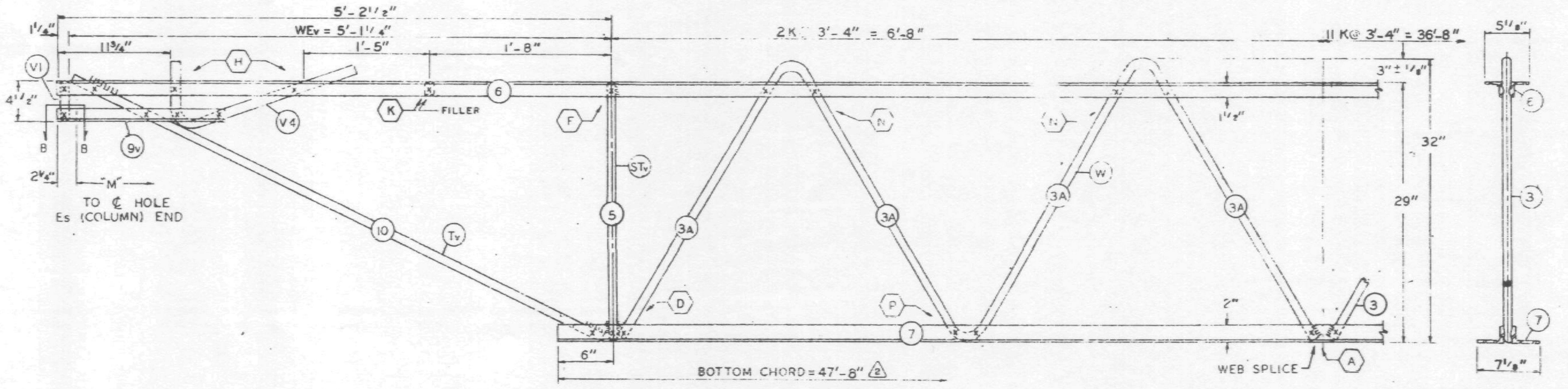

EL END (CORE)

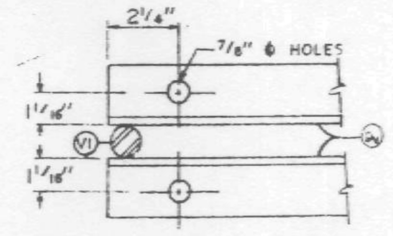

SECTION B-B

FABRICATION REQUIREMENTS	DESIGN	TOLERANCE
CAMBER AT MIDSPAN	2"	± 3/8"
DESIGN DEPTH	29"	± 1/4"
PANEL "K"	3'-4"	± 1/4"
OVERALL LENGTH	59'-9"	± 3/8"
WEB DEPTH	31 [illegible]"	± 1/4"

ALL PANEL POINTS RESISTANCE WELDED. (x).
ARC WELDS INDICATED AT SHADED AREAS AND AT BOTTOM CHORD WEB SPLICES.
LETTERS IN HEXAGON INDICATE WELD DETAIL, ie., (A).
LETTERS AND NUMBERS IN SQUARES INDICATE RESISTANCE WELD STRENGTH IDENTIFIED IN THE QUALITY CONTROL PROGRAM ie., [R1].
ALL WELD DETAILS SHOWN ON SHEETS ST290, ST291, ST 293 AND ST 283.
ALL CHANNEL DETAILS SHOWN ON SHEET ST 407.
CHORD PLATE DETAILS SHOWN ON SHEET ST 283.
SEE SHEET ST 295 FOR V1 & V4 DETAILS.

NOTE #2

ALL DETAILS & ELEVATIONS SHOWN FOR C32T14AL TRUSSES ARE APPLICABLE TO C32T14AR TRUSSES WITH CHANNEL CH1R AND BEARING ANGLE 9A PLACED ON OPP. HAND AS SHOWN.

NO.	DATE	REVISION	BY
3	11-7-68	AS NOTED	G.D.C.
2	10-17-68	AS NOTED	LWH
1	10-3-68	GENERAL	G.D.C.

3 REF. DRWG.

7-AB1-13	10-4-68
7-AB1-54	10-4-68
7-AB1-53	7-22-68
7-AB3-2	1-3-68
7-AB3-24	8-15-68
7-AB4-17, 17.2	10-4-68
SA-124	10-11-68
7-AB1-55	10-15-68

PAINT
LACLEDE ELECTROCOAT
RED NO. 10001

TRUSS DESIGNATION	TOP CHORD TWO ANGLES				BOTTOM CHORD TWO ANGLES				MAIN WEB "W"					FILLER		"M" C/C HOLES	CHORD PLATE				TRUSS DATA	CHANNEL PLATES					REINFORCING ANGLES (2 REQ'D)			
	MK.	TYPE STEEL	CHORD SIZE	LENGTH	MK.	TYPE STEEL	CHORD SIZE	LENGTH (2)	MK.	TYPE STEEL	DIA.	LENGTH	NO. OF K	NO.	DIA.		MK.	TYPE STEEL	SIZE	LENGTH		MK.	TYPE STEEL	PCS.	SIZE	LENGTH	MK.	TYPE STEEL	SIZE (2)	LENGTH
C32T14AL-599	6	A242	2"x1½"x.25"	59'-9"	7	A36	3"x2"x.37"	47'-8"	3 3A 3B	A36 A242 A242	1.09 1.14 1.14	88'-6¼" 12'-5⅜" 10'-7⅜"	11K @ 3'-4" = 36'-8" 2K @ 3'-4" = 6'-8" 1¾K @ 3'-4" = 5'-9"	11	1.09	59'-3¾"	—	—	—	—		P8	A36	3	4½"x.39"	5½"	RA-1	A36	3"x2"x.37"	7½"

COLUMN END

Es END	TRUSS DESIGNATION	BEARING ANGLES					WE	DOUBLE STRUT				CHORD PLATE (2)				END STIFFENER MK. V8			END STIFFENER MK. V9			END STIFFENER MK. V10			CHANNEL (SEE NOTE #2)			
		MK.	TYPE STEEL	CHORD SIZE	PCS.	LENGTH		MK.	TYPE STEEL	DIA	LENGTH (2 REQ'D)	MK.	TYPE STEEL	SIZE	LENGTH	TYPE STEEL	DIA.	LENGTH	TYPE STEEL	DIA.	LENGTH	TYPE STEEL	DIA.	LENGTH	MK.	TYPE STEEL	CHANNEL SIZE	LENGTH
	C32T14AL-599	9 9A	A242 A242	2"x1½"x.25" 2"x1½"x.25"	- 1	9'-5" 8½"	5'-4¼"	3B	A242	1.14	2'-6¾"	CP13	A36	3"x.25	4'-4"	A242	1.14	10½"	A242	1.14	8'-3⅞"	—	—	—	CH1L CH1R	A36 A36	10 [30 10 [30	10'-0" 10'-0"

CHECK DIMENSION FOR TRUSS FAB.

LOCATION OF TRANS. TRUSS				
CL-1	CL-2	CL-3	CL-4	Fs
9'-6½"	22'-10½"	36'-2½"	49'-6½"	7'-4½"

CORE END

EL END	TRUSS DESIGNATION	BEARING ANGLES				WEv	DIAGONAL "Tv" STRUT				VERTICAL "STv" STRUT				END STIFFENER MK. V1			END STIFFENER MK. V2			END STIFFENER MK. V4			DOUBLE STRUT				DOUBLE STRUT			
		MK.	TYPE STEEL	CHORD SIZE	LENGTH		MK.	TYPE STEEL	DIA.	LENGTH	MK.	TYPE STEEL	DIA.	LENGTH	TYPE STEEL	DIA.	LENGTH	TYPE STEEL	DIA	LENGTH	TYPE STEEL	DIA.	LENGTH	MK.	TYPE STEEL	DIA.	LENGTH	MK.	TYPE STEEL	DIA.	LENGTH
	C32T14AL-599	9v	A242	2"x1½"x.25"	1'-7"	5'-1¼"	10	A242	1.14	5'-6½"	5	A242	1.14	2'-4⅞"	A242	1.14	[illegible]⅜"	—	—	—	A242	1.14	2'-2½"	-	—	—	—	-	—	—	—

(3)

FLOOR TRUSS DETAILS
FOR
WORLD TRADE CENTER - N.Y.C.
FOR
THE PORT OF NEW YORK AUTHORITY

FLOOR TRUSS C32T14AL x 59'-9" LONG (SEE NOTE #2)
WORLD TRADE CENTER TOWERS A & B

FABRICATION BY LACLEDE STEEL COMPANY

FABRICATED AT MADISON, ILLINOIS		DESIGN DRAWING NO 7-AB1-13	PLATE
APPROVED FOR FABRICATION BY ___ FOR P.O.N.Y.A.	DATE 11/18/68	DRAWN BY gdc DATE SEPT. 9, 1968	
APPROVED FOR FABRICATION BY ___ FOR FABRICATOR	DATE	CHECKED BY T.M.CHURA DATE SEPT. 9, 1968	IN CHARGE OF PROD. DEV.
DETAILED BY A. CARL WEBER		FABRICATION CONT. NO W.T.C. 221	SHEET NO. ST 214AL

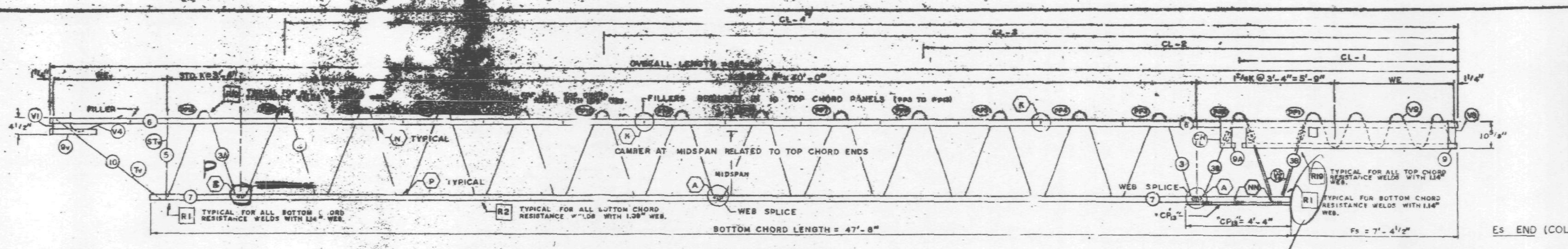

EL END (CORE)

TRUSS ELEVATION

Es END (COLUMN)

(Double Bars – Different R-Values?
(Full strength of both web bars to be Developed)

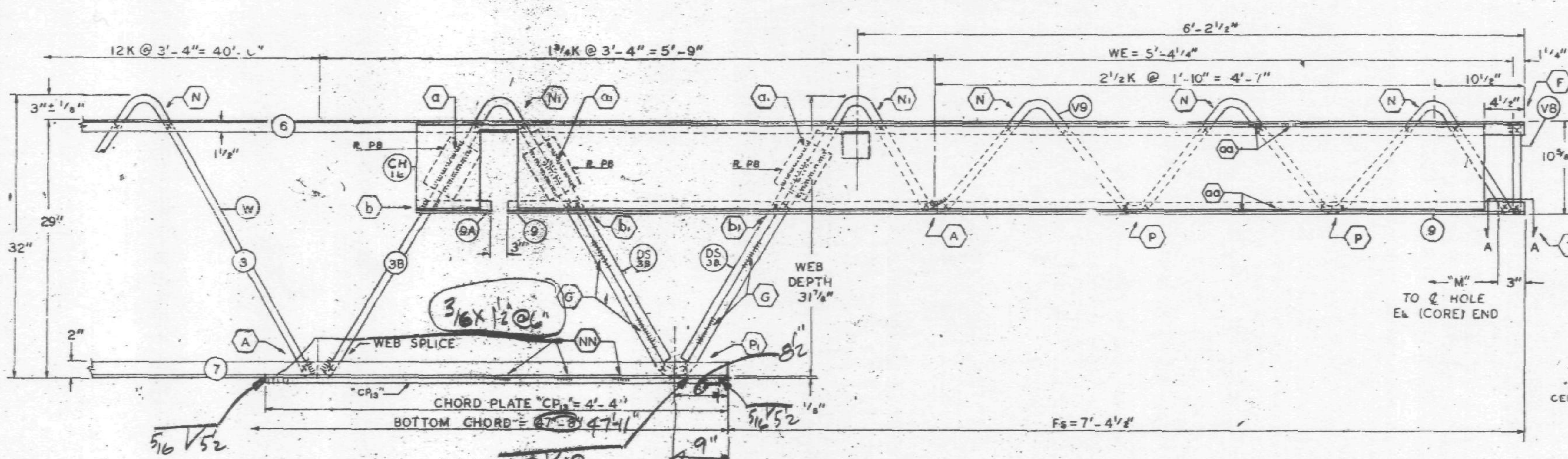

Es END (COLUMN)

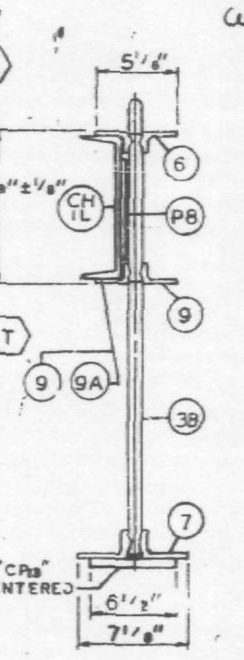

C32T14AL (SEE NOTE #2)

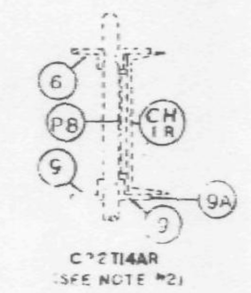

CH1L PLACED AS SHOWN FOR C32T14AR.
CH1R PLACED AS SHOWN FOR C32T14AL.

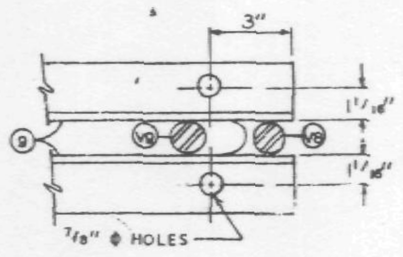

SECTION A-A

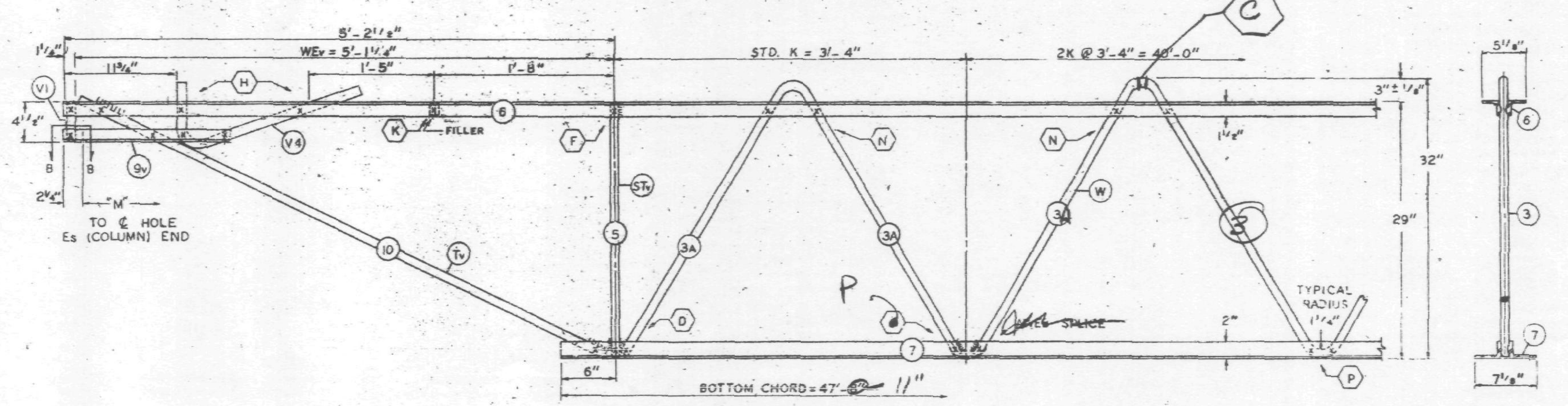

EL END (CORE)

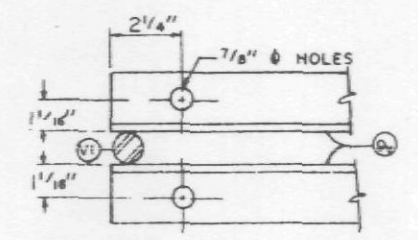

SECTION B-B

FABRICATION REQUIREMENTS

	DESIGN	TOLERANCE
CAMBER AT MIDSPAN	2"	± 3/8"
DESIGN DEPTH	32"	±1/4"
PANEL "K"	4"	±1/4"
OVERALL LENGTH	59'-9"	±3/[illegible]
WEB DEPTH	31 7/8"	±1/[illegible]

ALL PANEL POINTS RESISTANCE WELDED (X).
ARC WELDS INDICATED AT SHADED AREAS AND AT BOTTOM CHORD WEB SPLICES.
LETTERS IN HEXAGON INDICATE WELD DETAIL, ie., (A).
LETTERS AND NUMBERS IN SQUARES INDICATE RESISTANCE WELD STRENGTH IDENTIFIED IN THE QUALITY CONTROL PROGRAM, ie., [R1].
ALL WELD DETAILS SHOWN ON SHEETS ST290, ST291, ST 293 AND ST 283.
ALL CHANNEL DETAILS SHOWN ON SHEET ST 40[illegible].
CHORD PLATE DETAILS SHOWN ON SHEET ST 283.
SEE SHEET ST 295 FOR V1 & V4 DETAILS.
SEE SHEET ST 294 FOR V8 & V9 DETAILS.

NOTE #2

ALL DETAILS & ELEVATIONS SHOWN FOR C32T14AL TRUSSES ARE APPLICABLE TO C32T14AR TRUSSES WITH CHANNEL CH1R AND BEARING ANGLE 9A PLACED ON OPP. HAND AS SHOWN.

REF. DRWG.

7-AB1-13	8-15-68
7-AB1-54	8-15-68
7-AB1-53,55	7-22-68
7-AB3-2	1-3-68
7-AB3-24	8-15-68
7-AB4-17,17.2	8-15-68
SA-124	8-1-68

PAINT

LACLEDE ELECTROCOAT
RED NO. 10001

TRUSS DESIGNATION	TOP CHORD TWO ANGLES				BOTTOM CHORD TWO ANGLES				MAIN WEB "W"					FILLER		"M" C/C HOLES	CHORD PLATE				TRUSS DATA	CHANNEL PLATES				
	MK.	TYPE STEEL	CHORD SIZE	LENGTH	MK.	TYPE STEEL	CHORD SIZE	LENGTH	MK.	TYPE STEEL	DIA.	LENGTH	NO. OF K	NO.	DIA.		MK.	TYPE STEEL	SIZE	LENGTH		MK	TYPE STEEL	PCS.	SIZE	LENGTH
C32T14AL-599	6	A242	2"x 1 1/2"x .25"	59'-9"	7	A36	3"x 2"x .37"	47'-8" 11"	3 3A 3B	A36 A242 A242	1.09 1.14 1.14	74'-8" [illegible] 10'-7 3/8"	12K@3'-4" = 40'-0" [illegible]@3'-4" = 3'-4" 1 3/4K@3'-4" = 5'-9"	11	1.09	59'-3 3/4"	—	—	—	—		Pb	A36	3	4"x1/4" (4 1/2 x .39)	6" (5 1/2")

COLUMN END

Es END	TRUSS DESIGNATION	BEARING ANGLES					WE	DOUBLE STRUT				CHORD PLATE				END STIFFENER									CHANNEL (SEE NOTE #2)			
																MK. V8			MK. V9			MK. V10						
		MK.	TYPE STEEL	CHORD SIZE	PCS.	LENGTH		MK.	TYPE STEEL	DIA	LENGTH (2 REQD)	MK.	TYPE STEEL	SIZE	LENGTH	TYPE STEEL	DIA.	LENGTH	TYPE STEEL	DIA.	LENGTH	TYPE STEEL	DIA.	LENGTH	MK.	TYPE STEEL	CHANNEL SIZE	LENGTH
	C32T14AL-599	9 9A	A242 A242	2"x1 1/2"x.25" 2"x1 1/2"x.25"	2 1	[illegible] [illegible]	5'-4 1/4"	DS	A242	1.14	2'-6 3/4"	CP	A36	6 1/2"x3/4"	4'-4"	A242	1.14	10 1/2"		1.14	8'-3 7/8"	—	—	—	CH1L CH1R	A36 A36	10 C 30 10 C 30	10'-0" 10'-0"

CHECK DIMENSION FOR TRUSS FAB.

LOCATION OF TRANS. TRUSS				
CL-1	CL-2	CL-3	CL-4	Fs
9'-6 1/2"	22'-10 1/2"	36'-2 1/2"	49'-6 1/2"	7'-4 1/2"

CORE END

EL END	TRUSS DESIGNATION	BEARING ANGLES				WEv	DIAGONAL "Tv" STRUT				VERTICAL "STv" STRUT				END STIFFENER									DOUBLE STRUT				DOUBLE STRUT			
															MK. V1			MK. V2			MK. V4										
	-	MK.	TYPE STEEL	CHORD SIZE	LENGTH		MK.	TYPE STEEL	DIA.	LENGTH	MK.	TYPE STEEL	DIA.	LENGTH	TYPE STEEL	DIA	LENGTH	TYPE STEEL	DIA.	LENGTH	TYPE STEEL	DIA.	LENGTH	MK.	TYPE STEEL	DIA.	LENGTH	MK.	TYPE STEEL	DIA.	LENGTH
	C32T14AL-599	9v	A242	2"x 1 1/2"x.25"	1'-7"	5'-1 1/4"	10	A242	1.14	5'-6 1/2"	5	A242	1.14	2'-4 3/4"	A242	1.14	4 3/8"	—	—	—	A242	1.14	2'-2 1/2"	—	—	—	—	—	—	—	—

FLOOR TRUSS DETAILS
FOR
WORLD TRADE CENTER – N.Y.
FOR
THE PORT OF NEW YORK AUTHORITY

FLOOR TRUSS C32T14AL x 59'-9" LONG (SEE NOTE #2)
WORLD TRADE CENTER TOWERS A & B

FABRICATION BY LACLEDE STEEL COMPANY			
FABRICATED AT MADISON, ILLINOIS		DESIGN DRAWING NO. 7-AB1-13	DATE
APPROVED FOR FABRICATION BY ______ FOR P.O.N.Y.A	DATE	DRAWN BY gdc DATE SEPT. 9, 1968	
APPROVED FOR FABRICATION BY ______ FOR FABRICATOR	DATE	CHECKED BY T.M.CHURA DATE SEPT. 9, 1968	IN CHARGE OF PROD. DEV.
DETAILED BY CARL WEBER		FABRICATION CONT. NO. W.T.C. 221	SHEET NO. ST 214AL

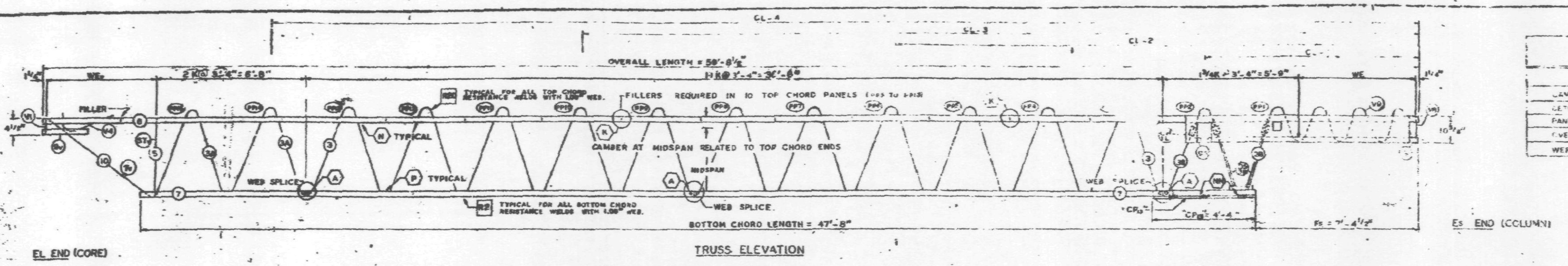

TRUSS ELEVATION

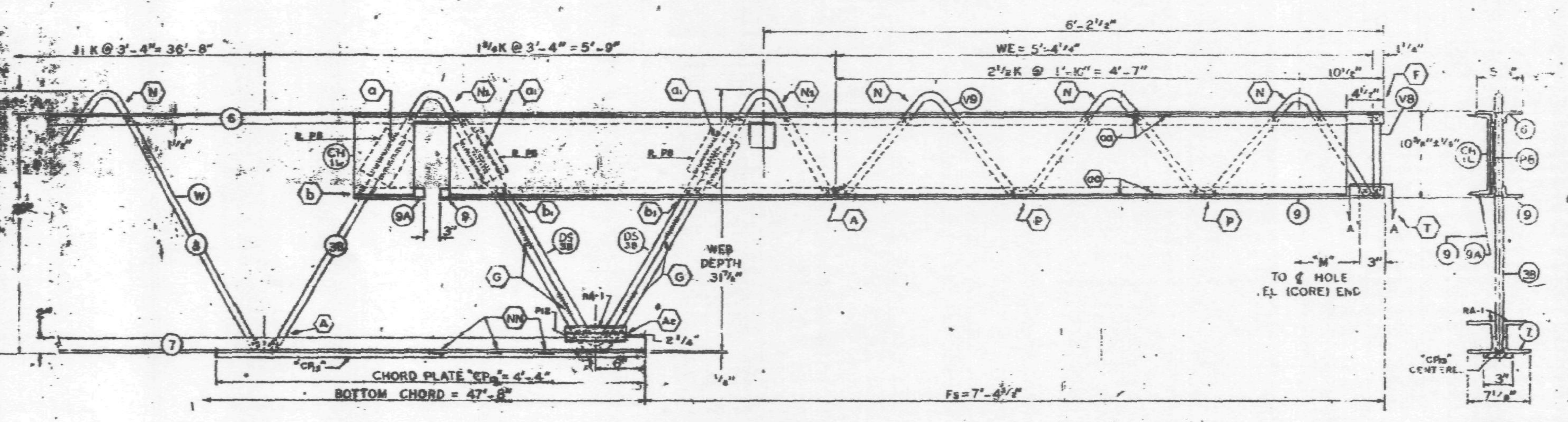

Es END (COLUMN)

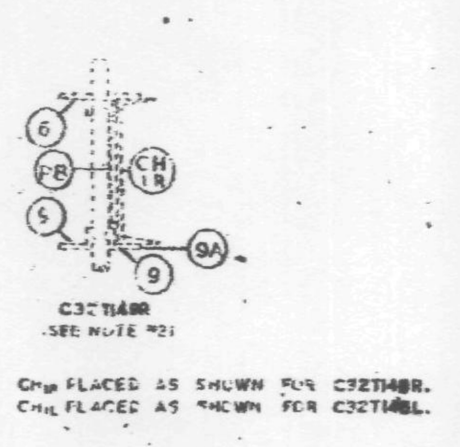

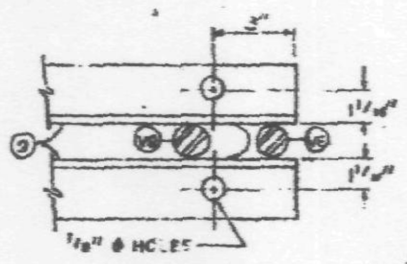

SECTION A-A

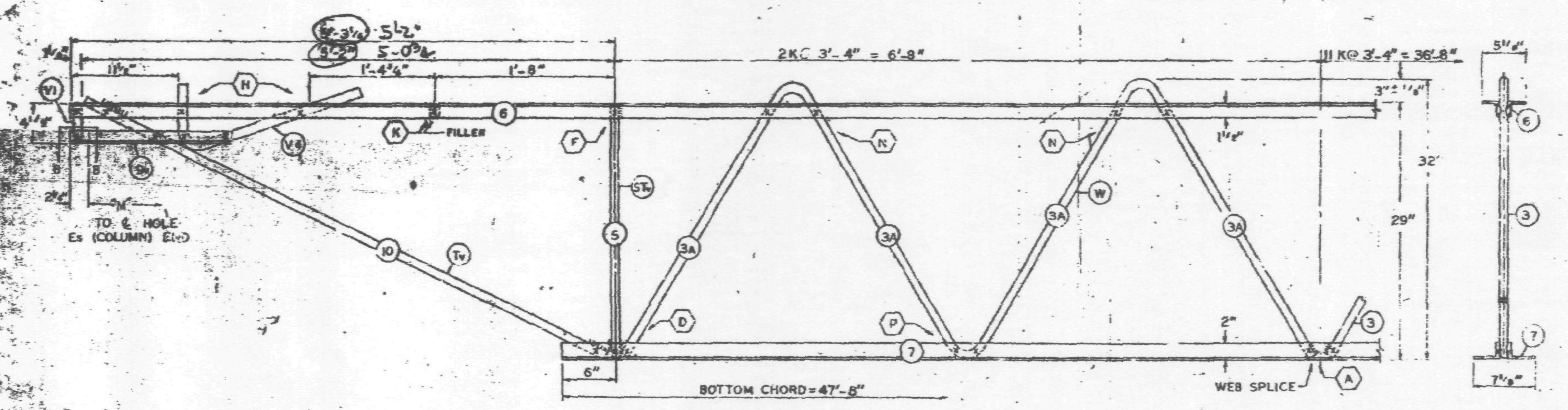

EL END (CORE)

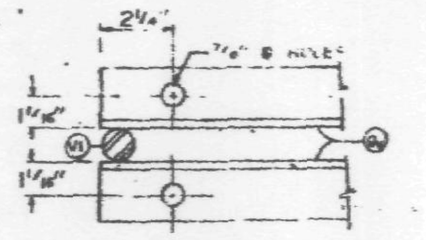

SECTION B-B

FABRICATION REQUIREMENTS

	DESIGN	TOLERANCE
CAMBER AT MIDSPAN	2"	±3/8"
DESIGN DEPTH	29"	±1/4"
PANEL "K"	3'-4"	±1/4"
OVERALL LENGTH	59'-8 1/2"	±3/8"
WEB DEPTH	31 7/8"	±1/4"

ALL PANEL POINTS RESISTANCE WELDED. (X).
ARC WELDS INDICATED AT SHADED AREAS AND AT BOTTOM CHORD WEB SPLICES.
LETTERS IN HEXAGON INDICATE WELD DETAIL.
LETTERS AND NUMBERS IN SQUARES INDICATE RESISTANCE WELD STRENGTH IDENTIFIED IN THE QUALITY CONTROL PROGRAM, ie., R1.
ALL WELD DETAILS SHOWN ON SHEETS ST290, ST291, ST293 AND ST283.
ALL CHANNEL DETAILS SHOWN ON SHEET ST 407.
CHORD PLATE DETAILS SHOWN ON SHEET ST 283.
SEE SHEET ST 295 FOR V1 & V4 DETAILS.

NOTE #2

ALL DETAILS & ELEVATIONS SHOWN FOR C32T14BL TRUSSES ARE APPLICABLE TO C32T14BR TRUSSES WITH CHANNEL CH1R AND BEARING ANGLE 9A PLACED ON OPP. HAND AT THE END.

NO.	DATE	REVISION	BY

REF. DRWG.

7-AB1-13	[illegible]
7-AB1-54	1-6-69
7-AB3-53	7-22-68
7-AB3-2	1-3-69
7-AB3-24	8-15-68
7-AB4-17	10-4-68
SA-124	1-6-69
7-AB1-56	10-15-68
7-AB4-17.2	12-20-68

SKILLING - HELLE CHRISTIANSEN - ROBERTSON Structural & Civil Engineers
☐ APPROVED
☒ APPROVED AS NOTED
☐ RESUBMIT
☐ REJECTED
Date 4/29/69 By SK

PAINT
LACLEDE ELECTROCOAT
RED NO. 10001

TRUSS DESIGNATION	TOP CHORD TWO ANGLES				BOTTOM CHORD TWO ANGLES				MAIN WEB "W"					FILLER		"M" C/C HOLES	CHORD PLATE				TRUSS DATA	CHANNEL PLATES					REINFORCING ANGLES				SPECIAL PLATES			
	MK.	TYPE STEEL	CHORD SIZE	LENGTH	MK.	TYPE STEEL	CHORD SIZE	LENGTH	MK.	TYPE STEEL	DIA.	LENGTH	NO. OF K	NO.	DIA.		MK.	TYPE STEEL	SIZE	LENGTH		MK.	TYPE STEEL	PCS.	SIZE	LENGTH	MK.	TYPE STEEL	ANGLE SIZE	(2 REQ'D) LENGTH	MK.	TYPE STEEL	SIZE	(2 REQ'D) LENGTH
C32T14BL-5985	6	A2	2"x 1 1/2"x .25"	59'-8 1/2"	7	A36	3"x 2"x .37"	47'-8"	3 / 3A / 3B	A36 / A242 / A242	1.09 / 1.14 / 1.14	[illegible] / [illegible] / 10'-7 7/8"	11 K @ 3'-4" = 36'-8" / 2K @ 3'-4" = 6'-8" / 1 3/4 K @ 3'-4" = 5'-9"	11	1.09	59'-3 1/4"	—	—	—	—		P6	A36	3	[illegible]	5 1/2"	[illegible]	A36	[illegible]	7 1/2"	[illegible]	A36	1"x 3/4"	7 1/2"

COLUMN END

Es / EL	DESIGNATION	BEARING ANGLES					WE	DOUBLE STRUT				CHORD PLATE				END STIFFENER MK. V8			END STIFFENER MK. V9			END STIFFENER MK. V10			CHANNEL (SEE NOTE #2)			
		MK.	TYPE STEEL	CHORD SIZE	PCS.	LENGTH		MK.	TYPE STEEL	DIA.	LENGTH (2 REQ'D)	MK.	TYPE STEEL	SIZE	LENGTH	TYPE STEEL	DIA.	LENGTH	TYPE STEEL	DIA.	LENGTH	TYPE STEEL	DIA.	LENGTH	MK.	TYPE STEEL	CHANNEL SIZE	LENGTH
	C32T14BL-5985	[illegible]	A242	[illegible]	2 / 1	[illegible]	5'-4 1/4"	DS	A242	1.14	2'-8 1/4"	CP8	A36	3"x.25	4'-4"	A242	1.14	10 1/2"	A242	1.14	8'-3 7/8"	—	—	—	CH1L / CH1R	A36 / A36	10 C 30 / 10 C 30	[illegible]

TRUSS DESIGNATION	BEARING ANGLES				WEv	DIAGONAL "Tv" STRUT				VERTICAL "ST" STRUT				END STIFFENER MK. V1			END STIFFENER MK. V2			END STIFFENER MK. V4			DOUBLE STRUT				DOUBLE STRUT			
	MK.	TYPE STEEL	CHORD SIZE	LENGTH		MK.	TYPE STEEL	DIA.	LENGTH	MK.	TYPE STEEL	DIA.	LENGTH	TYPE STEEL	DIA.	LENGTH	TYPE STEEL	DIA.	LENGTH	TYPE STEEL	DIA.	LENGTH	MK.	TYPE STEEL	DIA.	LENGTH	MK.	TYPE STEEL		LENGTH
	[illegible]	[illegible]	[illegible] x .25"	1'-6"	5'-[illegible]	10	A242	1.14	5'-6 1/4"	5	A242	1.14	2'-4 1/8"	A242	1.14	4 3/8"	—	—	—	A242	1.14	2'-2 1/8"	—	—	—	—	—	—		—

CHECK DIMENSION FOR TRUSS FAB.

LOCATION OF TRANS. TRUSS

CL-1	CL-2	CL-3	CL-4	Fs
9'-6 1/2"	22'-10 1/2"	36'-2 1/2"	49'-6 1/2"	7'-4 1/2"

FLOOR TRUSS DETAILS
FOR
WORLD TRADE CENTER - N.Y.C.
FOR
THE PORT OF NEW YORK AUTHORITY

FLOOR TRUSS C32T14BL x 59'-8 1/2" LONG (SEE NOTE #2)
WORLD TRADE CENTER TOWERS A & B

FABRICATION BY LACLEDE STEEL COMPANY
FABRICATED AT [illegible] ILLINOIS
DESIGN DRAWING NO. 7-AB1-13
DRAWN BY [illegible] DATE APRIL 11, 1969
CHECKED BY [illegible] DATE APRIL 11, 1969
DATE
IN CHARGE OF PROD. DEV.
LACLEDE STEEL CO.
DETAILED BY A. CARL WEBER
FABRICATION CONT. NO. 221
SHEET NO. ST 214BL

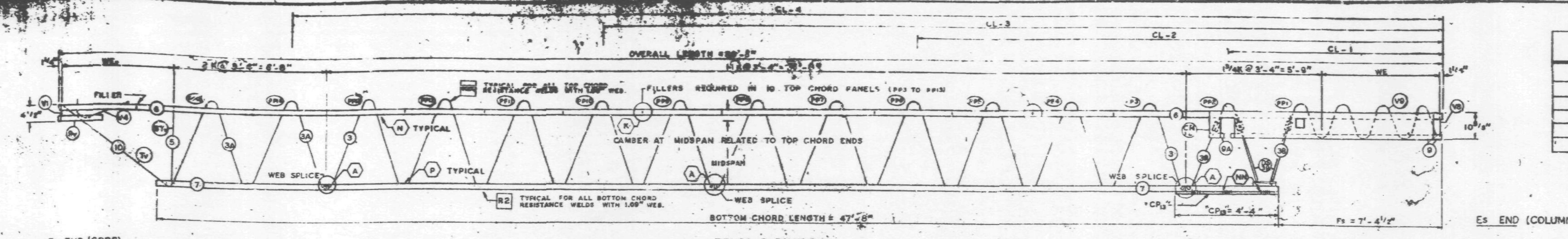

TRUSS ELEVATION

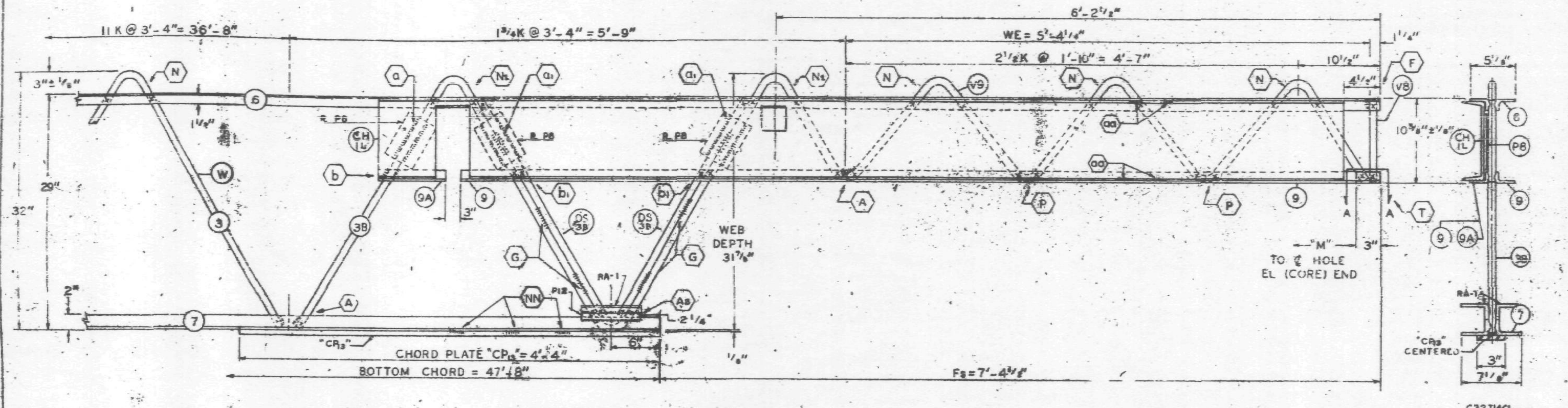

Es END (COLUMN)

FABRICATION REQUIREMENTS	DESIGN	TOLERANCE
CAMBER AT MIDSPAN	2"	±3/8"
DESIGN DEPTH	29"	±1/4"
PANEL "K"	3'-4"	±1/4"
OVERALL LENGTH	59'-6"	±3/8"
WEB DEPTH	31 7/8"	±1/4"

ALL PANEL POINTS RESISTANCE WELDED. (x).
ARC WELDS INDICATED AT SHADED AREAS AND AT BOTTOM CHORD WEB SPLICES.
LETTERS IN HEXAGON INDICATE WELD DETAIL, ie., (A).
LETTERS AND NUMBERS IN SQUARES INDICATE RESISTANCE WELD STRENGTH IDENTIFIED IN THE QUALITY CONTROL PROGRAM, ie., RI.
ALL WELD DETAILS SHOWN ON SHEETS ST290, ST291, ST293 AND ST283.
ALL CHANNEL DETAILS SHOWN ON SHEET ST 407.
CHORD PLATE DETAILS SHOWN ON SHEET ST 283.
SEE SHEET ST 295 FOR V1 & V4 DETAILS.

NOTE #2

ALL DETAILS & ELEVATIONS SHOWN FOR C32T14CL TRUSSES ARE APPLICABLE TO C32T14CR TRUSSES WITH CHANNEL CH1R AND BEARING ANGLE 9A PLACED ON OPP. HAND AS SHOWN.

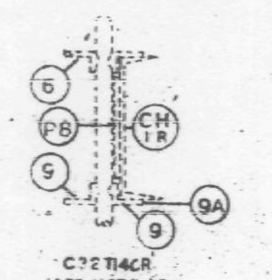

C32T14CR (SEE NOTE #2)

CH_{1R} PLACED AS SHOWN FOR C32T14CR.
CH_{1L} PLACED AS SHOWN FOR C32T14CL.

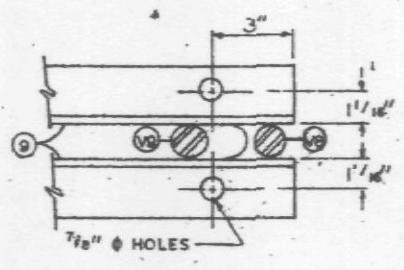

SECTION A-A

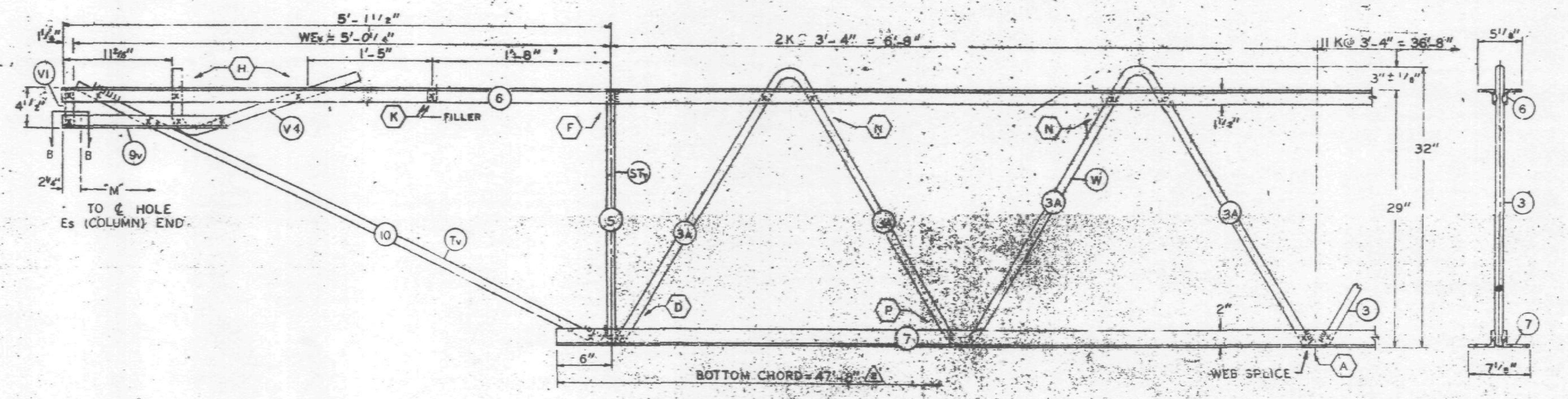

EL END (CORE)

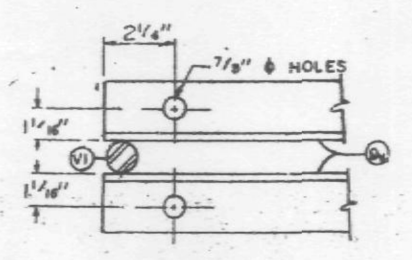

SECTION B-B

NO.	DATE	REVISION	BY

REF. DRWG.	
7-AB1-13	10-4-68
7-AB1-34	11-25-68
7-AB1-53	7-22-68
7-AB3-2	1-3-68
7-AB3-24	8-15-68
7-AB4-17,17.2	10-4-68
SA-124	10-11-68
7-AB1-55	10-15-68

PAINT
LACLEDE ELECTROCOAT
RED NO. 10001

TRUSS DESIGNATION	TOP CHORD TWO ANGLES MK.	TYPE STEEL	CHORD SIZE	LENGTH	BOTTOM CHORD TWO ANGLES MK.	TYPE STEEL	CHORD SIZE	LENGTH	MAIN WEB "W" MK.	TYPE STEEL	DIA.	LENGTH	NO. OF K	FILLER NO.	DIA.	"M" ℄ HOLES	CHORD PLATE MK.	TYPE STEEL	SIZE	LENGTH	TRUSS DATA	CHANNEL PLATES MK.	TYPE STEEL	PCS.	SIZE	LENGTH	REINFORCING ANGLES MK.	TYPE STEEL	ANGLE SIZE	(2 REQ'D) LENGTH	SPECIAL PLATES MK.	TYPE STEEL	SIZE	(2 REQ'D) LENGTH
C32T14CL-[illegible]	6	A242	2"x 1½"x .25"	59'-8"	7	A36	3"x 2"x .37"	47'-6"	3 / 3A / 3B	A36 / A242 / A242	1.09 / 1.12 / 1.14	[illegible] / 12'-5⅞" / 10'-7⅞"	11K@3'-4"=36'-8" / 2K@3'-4"=6'-8" / 1¾K@3'-4"=5'-9"	11	1.09	59'-[illegible]	—	—	—	—		P6	A36	3	4"x.39"	5½"	RA1	[illegible]	3"x2"x.37"	7½"	P12	A36	1"x⅜"	7½"

Es END TRUSS DESIGNATION	BEARING ANGLES MK.	TYPE STEEL	CHORD SIZE	PCS.	LENGTH	WE	DOUBLE STRUT MK.	TYPE STEEL	DIA	LENGTH (2 REQ'D)	CHORD PLATE MK.	TYPE STEEL	SIZE	LENGTH	END STIFFENER MK. V8 TYPE STEEL	DIA.	LENGTH	MK. V9 TYPE STEEL	DIA.	LENGTH	MK. V10 TYPE STEEL	DIA.	LENGTH	CHANNEL (SEE NOTE #2) MK.	TYPE STEEL	CHANNEL SIZE	LENGTH
C32T14CL-598	9 / 9A	A242 / A242	2"x 1½"x .25" / 2"x 1½"x .25"	2 / 1	8'-5" / 8½"	5'-4¼"	DS	A242	1.14	2'-6¾"	CP	A36	3"x.25	4'-4"	A242	1.14	10½"	A242	1.14	8'-3¾"	—	—	—	CH1L / CH1R	A36 / A36	10 C 30 / 10 C 30	10'-0" / 10'-0"

CHECK DIMENSION FOR TRUSS FAB. LOCATION OF TRANS. TRUSS				
CL-1	CL-2	CL-3	CL-4	Fs
9'-6½"	22'-10½"	36'-2½"	49'-6½"	7'-4½"

EL END TRUSS DESIGNATION	BEARING ANGLES MK.	TYPE STEEL	CHORD SIZE	LENGTH	WEv	DIAGONAL "Tv" STRUT MK.	TYPE STEEL	DIA.	LENGTH	VERTICAL "STv" STRUT MK.	TYPE STEEL	DIA.	LENGTH	END STIFFENER MK. V1 TYPE STEEL	DIA.	LENGTH	MK. V2 TYPE STEEL	DIA.	LENGTH	MK. [illegible] TYPE STEEL	DIA.	LENGTH	DOUBLE STRUT MK.	TYPE STEEL	DIA.	LENGTH	DOUBLE STRUT MK.	TYPE STEEL	DIA.	LENGTH
C32T14CL-598	9v	A242	2"x 1½"x .25"	1'-6"	5'-0¼"	10	A242	1.14	5'-5⅛"	5	A242	1.14	2'-4⅞"	A242	1.14	4⅞"	—	—	—	A242	1.14	2'-2⅞"	—	—	—	—	—	—	—	—

FLOOR TRUSS DETAILS
FOR
WORLD TRADE CENTER – N.Y.C.
FOR
THE PORT OF NEW YORK AUTHORITY

FLOOR TRUSS C32T14CL x 59'-8" LONG (SEE NOTE #2)
WORLD TRADE CENTER TOWERS A & B

FABRICATION BY LACLEDE STEEL COMPANY

FABRICATED AT MADISON, ILLINOIS		DESIGN DRAWING NO. 7-AB1-13	PLATE
APPROVED FOR FABRICATION FOR P.O.N.Y.A. James White	DATE 4/7/69	DRAWN BY G.G.C. DATE MAR 28, 1969	
APPROVED FOR FABRICATION BY FOR FABRICATOR	DATE	CHECKED BY T. MACHURA DATE MAR 28, 1969	IN CHARGE OF PROD. DEV.
DETAILED BY LACLEDE STEEL CO.		FABRICATION CONT. NO WTC 221	SHEET NO. ST 214CL

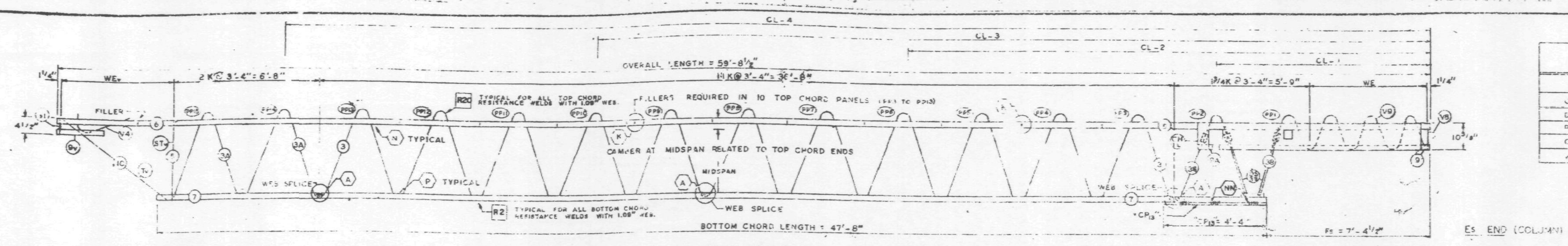

EL END (CORE)

TRUSS ELEVATION

ES END (COLUMN)

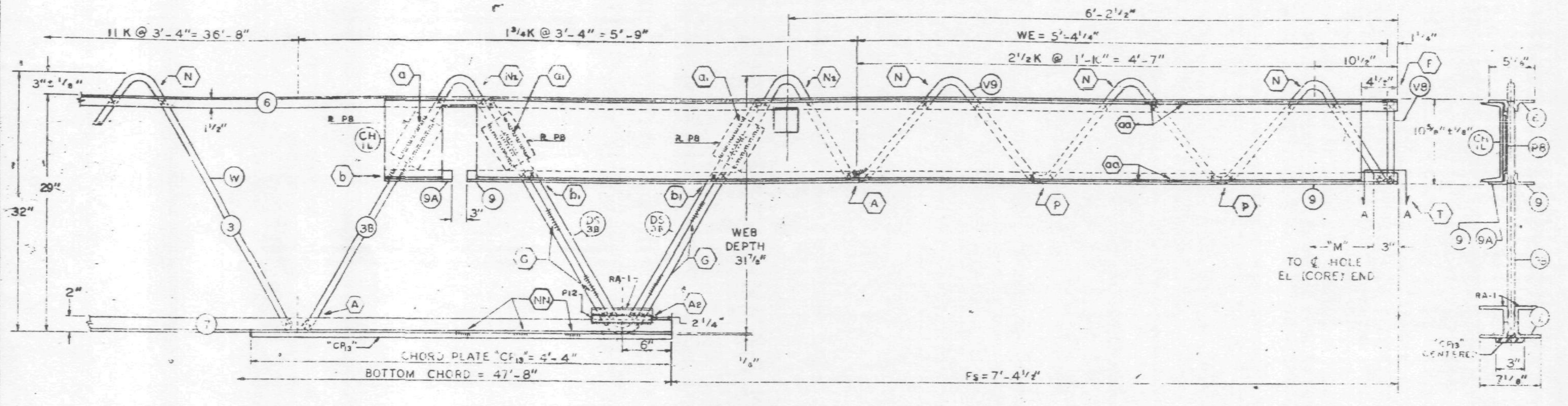

ES END (COLUMN)

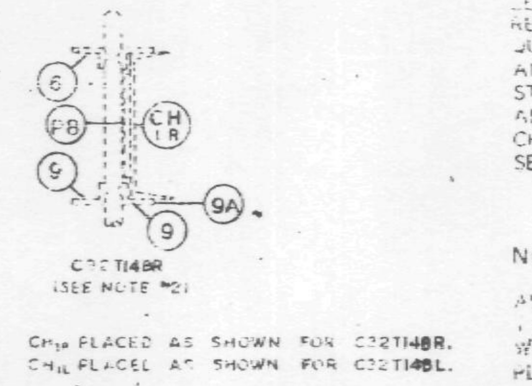

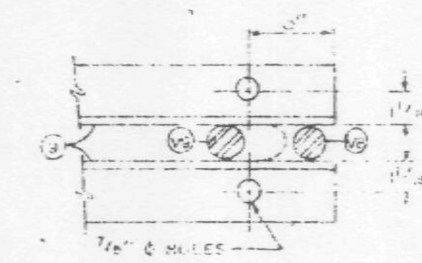

SECTION A-A

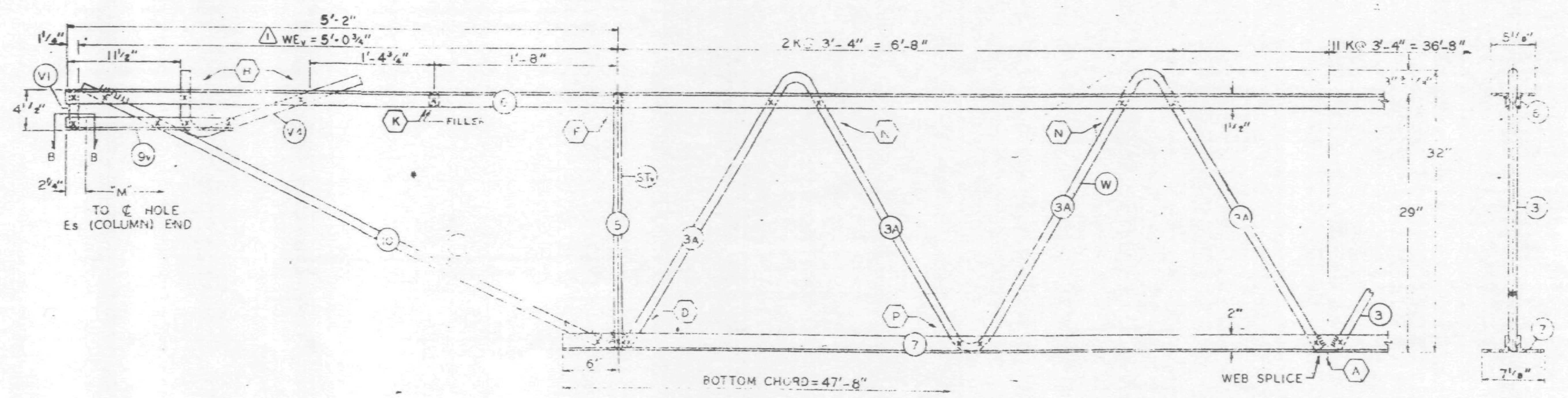

EL END (CORE)

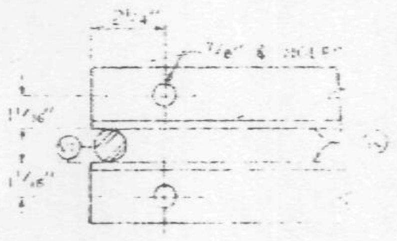

SECTION B-B

FABRICATION REQUIREMENTS	DESIGN	TOLERANCE
CAMBER AT MIDSPAN	2"	± 3/8"
DESIGN DEPTH	29"	± 1/4"
PANEL "K"	3'-4"	± 1/4"
OVERALL LENGTH	59'-8½"	± 3/8"
WEB DEPTH	31 7/8"	± 1/4"

ALL PANEL POINTS RESISTANCE WELDED (X). ARC WELDS INDICATED AT SHADED AREAS AND AT BOTTOM CHORD WEB SPLICES. LETTERS IN HEXAGON INDICATE WELD DETAIL, i.e., (A). LETTERS AND NUMBERS IN SQUARES INDICATE RESISTANCE WELD STRENGTH IDENTIFIED IN THE QUALITY CONTROL PROGRAM, i.e., [R1]. ALL WELD DETAILS SHOWN ON SHEETS ST290, ST291, ST293 AND ST283. ALL CHANNEL DETAILS SHOWN ON SHEET ST407. CHORD PLATE DETAILS SHOWN ON SHEET ST283. SEE SHEET ST 295 FOR V1 & V4 DETAILS.

NOTE #2

ALL DETAILS & ELEVATIONS SHOWN FOR C32T14BL TRUSSES ARE APPLICABLE TO C32T14BR TRUSSES WITH CHANNEL CH & BEARING ANGLE 9A PLACED ON OPP. HAND AS SHOWN.

NO	DATE	REVISION	BY
1	6-16-69	AS NOTED	G.D.C.

REF. DRWG.

7-AB1-13	10-4-68
7-AB1-54	1-6-69
7-AB1-53	7-22-68
7-AB3-2	1-3-68
7-AB3-24	8-15-68
7-AB4-17	10-4-68
SA-124	1-6-69
7-AB1-55	10-15-68
7-AB4-172	12-20-68

PAINT
LACLEDE ELECTROCOAT
RED NO. 10001

TRUSS DESIGNATION	TOP CHORD TWO ANGLES: TYPE STEEL	CHORD SIZE	LENGTH	BOTTOM CHORD TWO ANGLES: MK	TYPE STEEL	CHORD SIZE	LENGTH	MAIN WEB "W": MK	TYPE STEEL	DIA.	LENGTH	NO. OF K	FILLER: NO.	DIA.	"M" C/C HOLES	CHORD PLATE: MK	TYPE STEEL	SIZE	LENGTH	TRUSS DATA	CHANNEL PLATES: MK	TYPE STEEL	PCS.	SIZE	LENGTH	REINFORCING ANGLES: MK	TYPE STEEL	ANGLE SIZE	(2 REQ'D) LENGTH	SPECIAL PLATES: MK	TYPE STEEL	SIZE	(2 REQ'D) LENGTH
32T14BL-5985	A242	2"x1½"x.25"	59'-8½"		A36	3"x2"x.37"	47'-8"	3 3A 3B	A36 A242 A242	1.09 1.14 1.14	66'-0¼" 12'-5½" 10'-7⅞"	11K@3'-4"=36'-8" 2K@3'-4"=6'-8" 1¾K@3'-4"=5'-9"	11	1.09	59'-3¼"	—	—	—	—		PL	A36	3	4½"x.39"	5½"	1	A36	3½"x2"x.37"	7½"	12	A36	1"x⅝"	7½"

ES COLUMN END	TRUSS DESIGNATION	BEARING ANGLES: MK	TYPE STEEL	CHORD SIZE	PCS.	LENGTH	WE	DOUBLE STRUT: MK	TYPE STEEL	DIA	LENGTH (2 REQ'D)	CHORD PLATE: MK	TYPE STEEL	SIZE	LENGTH	END STIFFENER MK. V8: TYPE STEEL	DIA.	LENGTH	MK. V9: TYPE STEEL	DIA.	LENGTH	MK. V10: TYPE STEEL	DIA.	LENGTH	CHANNEL (SEE NOTE #2): MK	TYPE STEEL	CHANNEL SIZE	LENGTH
	C32T[illegible]-5985	9 9A	A242 A242	[illegible]		8½"	5'-4¼"	[illegible]	A242	1.14	2'-6¾"	CP13	A36	3"x.25	4'-4"	A242	1.14	10½"	A242	1.14	8'-3⅞"	—	—	—	CH_R CH_L	A36 A36	10 C 30 10 C 30	10'-0" 10'-0"

CHECK DIMENSION FOR TRUSS FAB.

LOCATION OF TRANS. TRUSS				
CL-1	CL-2	CL-3	CL-4	
9'-6½"	[illegible]-10½"	36'-2½"	49'-6½"	7'-4½"

CORE END EL END	TRUSS DESIGNATION	BEARING ANGLES: MK	TYPE STEEL	CHORD SIZE	LENGTH	WE_V (1)	DIAGONAL "TV" STRUT: MK	TYPE STEEL	DIA.	LENGTH	VERTICAL "STV" STRUT: MK	TYPE STEEL	DIA	LENGTH	END STIFFENER MK. V1: TYPE STEEL	DIA.	LENGTH	MK. V2: TYPE STEEL	DIA.	LENGTH	MK. V4: TYPE STEEL	DIA.	LENGTH	DOUBLE STRUT: MK	TYPE STEEL	DIA.	LENGTH	DOUBLE STRUT: MK	TYPE STEEL	DIA.	LENGTH
	C32T14BL-5985	9V	A242	2"x1½"x.25"	1'-6"	5'-0¾"	10	A242	1.14	5'-6⅛"	5	A242	1.14	2'-4⅝"	A242	1.14	4⅜"	—	—	—	A242	1.14	2'-2¼"	—	—	—	—	—	—	—	—

FLOOR TRUSS DETAILS

WORLD TRADE CENTER N.Y.C.

THE PORT OF NEW YORK AUTHORITY

FLOOR TRUSS C32T14BL x 59'-8½" LONG (SEE NOTE #2)

WORLD TRADE CENTER TOWERS A & B

FABRICATION BY LACLEDE STEEL COMPANY

FABRICATE AT MADISON, ILLINOIS	DESIGN DRAWING NO. 7-AB1-13	PLATE
APPROVED FOR FABRICATION BY [illegible] FOR P.C.N.Y.A. DATE 7/28/69	DRAWN BY gdc DATE APRIL 11, 1969	
APPROVED FOR FABRICATION BY FOR FABRICATOR DATE	CHECKED BY T.M.CHURA DATE APRIL 11, 1969	IN CHARGE OF PROD. DEV.
LACLEDE STEEL CO. DETAILED BY A CARL WEBER	FABRICATION CONT. NO. W.T.C. 221	SHEET NO. ST 2148

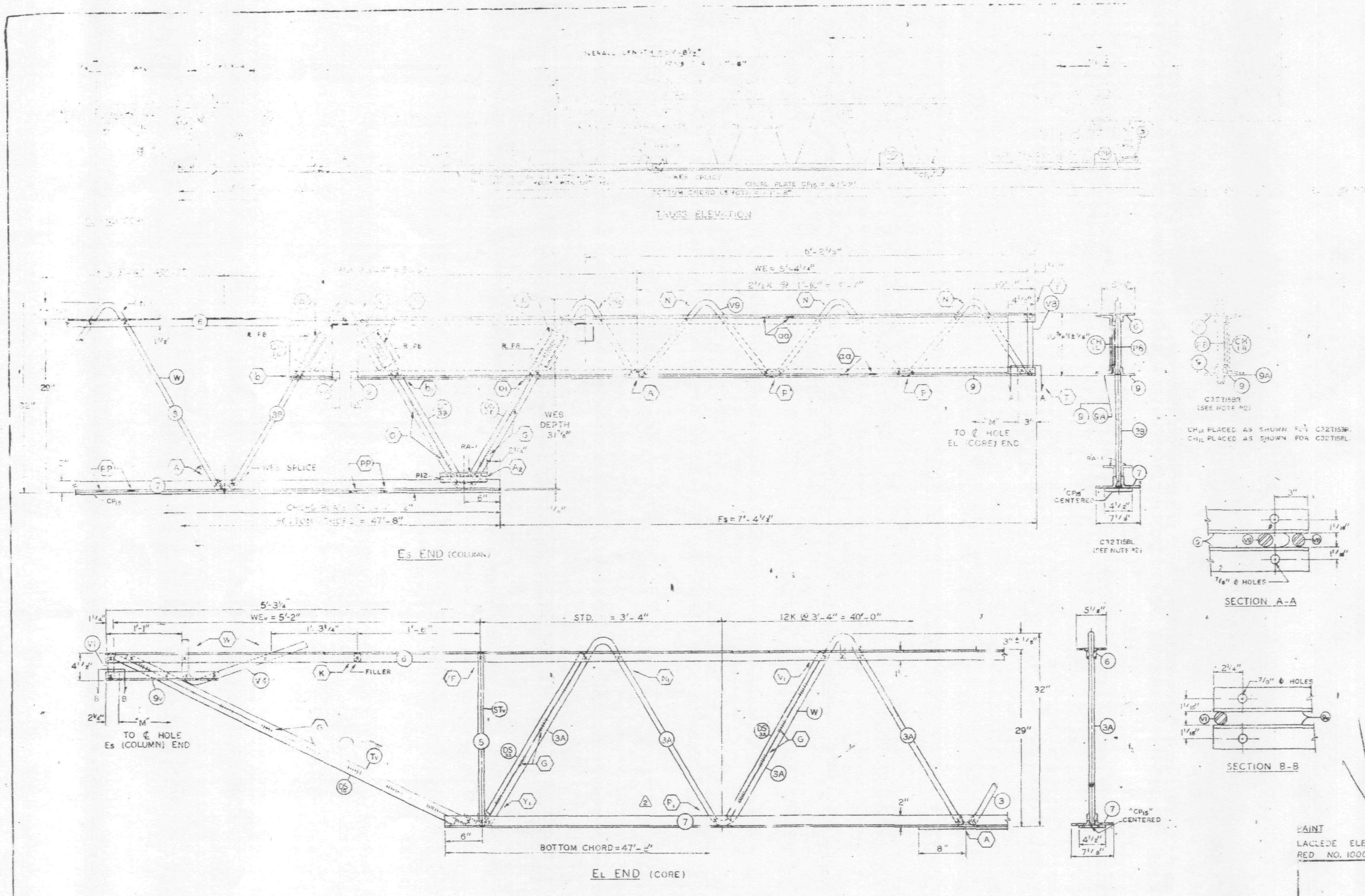

ALL PANEL POINTS RESISTANCE WELDED. I.E.
ARC WELDS INDICATED AT SHADED AREAS
AND AT BOTTOM CHORD WEB SPLICES.
LETTERS IN HEXAGON INDICATE WELD DETAIL, ie. (A).
LETTERS AND NUMBERS IN SQUARES INDICATE
RESISTANCE WELD STRENGTH IDENTIFIED IN THE
QUALITY CONTROL PROGRAM, ie. [RI].
ALL WELD DETAILS SHOWN ON SHEETS ST290, ST291,
ST292 & ST293.
ALL CHANNEL DETAILS SHOWN ON SHEET ST 407.
CHORD PLATE DETAILS SHOWN ON SHEET ST 293.
SEE SHEET ST 295 FOR V1 & V4 DETAILS.

NOTE 2

ALL DETAILS & ELEVATIONS SHOWN FOR C32T15BL TRUSSES ARE APPLICABLE TO C32T15BR TRUSSES WITH CHANNEL CH1R AND BEARING ANGLE 9A PLACED ON OPP. HAND AS SHOWN.

TRUSS DESIGNATION	TOP CHORD TWO ANGLES				BOTTOM CHORD TWO ANGLES				MAIN WEB "W"					FILLER		"M" C/C HOLES	CHORD PLATE				CONNECTION FILLER			CHANNEL PLATES					REINFORCING ANGLES				SPECIAL PLATES			
	MK.	TYPE STEEL	CHORD SIZE	LENGTH	MK.	TYPE STEEL	CHORD SIZE	LENGTH	MK.	TYPE STEEL	DIA.	LENGTH	NO. OF K	NO.	DIA.		MK.	TYPE STEEL	SIZE	LENGTH	NO.	DIA.	LENGTH	MK.	TYPE STEEL	PCS.	SIZE	LENGTH	MK.	TYPE STEEL	ANGLE SIZE	(2 REQ'D) LENGTH	MK.	TYPE STEEL	SIZE	(2 REQ'D) LENGTH
C32T15BL-59[illegible]	6	A242	2"x1 1/2"x.37"	59'-8 1/2"	7	A36	3"x2"x.37"	47'-8"	3 3A 3B	A242 A242 A242	1.14" 1.14" 1.14"	48'-8 1/4" 12'-5 1/2" 10'-7 5/8"	11K @ 3'-4" = 36'-8" 2K @ 3'-4" = 6'-8" 1 3/4K @ 3'-4" = 5'-9"	12	1.	59'-3 1/4"	CP_{15}	A36	4 1/2"x.39"	41'-2"	4	1.14	3"	P8	A36	3	4 1/2"x.39"	5'	[illegible]	A36	3"x2"x.37"	7 1/2"	P12	A36	1"x[illegible]"	7 1/2"

COLUMN END	TRUSS DESIGNATION	BEARING ANGLES					WE	DOUBLE STRUT				CHORD PLATE				END STIFFENER MK. V8			END STIFFENER MK. V9			END STIFFENER MK. V10			CHANNEL (SEE NOTE #2)			
		MK.	TYPE STEEL	CHORD SIZE	PCS.	LENGTH		MK.	TYPE STEEL	DIA.	LENGTH (2 REQ'D)	MK.	TYPE STEEL	SIZE	LENGTH	TYPE STEEL	DIA.	LENGTH	TYPE STEEL	DIA.	LENGTH	TYPE STEEL	DIA.	LENGTH	MK.	TYPE STEEL	CHANNEL SIZE	LENGTH
	C32T15BL-5985	9 9A	A242 A242	2"x1 1/2"x.25" 2"x1 1/2"x.25"	2 1	9'-5" 8 1/2"	5'-4 1/4"	DS	A242	1.14	2'-6 3/4"	–	—	—	—	A242	1.14	10 1/2"	A242	1.14	8'-3 7/8"	—	—	—	CH1L CH1R	A36 A36	10 [30 10 [30	10'-0" 10'-0"

CHECK DIMENSION FOR TRUSS FAB.

LOCATION OF TRANS. TRUSS			
CL-1	CL-2	CL-3	CL-4
9'-6"	22'-10 1/2"	36'-2 1/2"	4[illegible]-6 1/2"

CORE END	EL END	TRUSS DESIGNATION	BEARING ANGLES				WEv	DIAGONAL "Tv" STRUT				VERTICAL "STv" STRUT				END STIFFENER MK. V1			END STIFFENER MK. V2			END STIFFENER MK. V4			DOUBLE STRUT				DOUBLE STRUT				DOUBLE STRUT			
			MK.	TYPE STEEL	CHORD SIZE	LENGTH		MK.	TYPE STEEL	DIA.	LENGTH	MK.	TYPE STEEL	DIA.	LENGTH	TYPE STEEL	DIA.	LENGTH	TYPE STEEL	DIA.	LENGTH	TYPE STEEL	DIA.	LENGTH	MK.	TYPE STEEL	DIA.	LENGTH	MK.	TYPE STEEL	DIA.	LENGTH (2 REQ'D)	MK.	TYPE STEEL	DIA.	LENGTH
		C32T15BL-5985	9	A242	2"x1 1/2"x.25"	1'-6"	5'-2"	10	A242	1.14	5'-3 3/4	5	A242	1.14	2'-4 7/8"	A242	1.14	4 3/8"	—	—	—	A242	1.14	2'-2 1/2"	DS	A242	.75	5'-3 3/4		A242	.75	2'-6 3/4"	—	—	—	—

NO.	DATE	REVISION	BY

VOID

REF. DRWG.

7-AB1-14	10-4-68
7-AB1-54	1-6-69
7-AB1-53	7-22-68
7-AB3-2	1-3-68
7-AB3-24	8-15-68
7-AB4-17	10-4-68
5A-124	1-6-69
7-AB1-55	10-15-68
7-AB4-17.2	12-20-68

PAINT
LACLEDE ELECTROCOAT
RED NO. 10001

FLOOR TRUSS DETAILS
FOR
WORLD TRADE CENTER - N.Y.C.
FOR
THE PORT OF NEW YORK AUTHORITY

FLOOR TRUSS C32T15BL x 59'-8 1/2" LONG (SEE NOTE #2)
WORLD TRADE CENTER TOWERS A & B

FABRICATION BY LACLEDE STEEL COMPANY

FABRICATED AT MADISON, ILLINOIS		DESIGN DRAWING NO. 7-AB1-14	PLATE
APPROVED FOR FABRICATION BY: ______ FOR P.O.N.Y.A.	DATE	DRAWN BY: gdc DATE APRIL 11, 1969	
APPROVED FOR FABRICATION BY: ______ FOR FABRICATOR	DATE	CHECKED BY: T.M. CHURA DATE APRIL 11, 1969	IN CHARGE OF PROD. DEV.
DETAILED BY: A. CARL WEBER LACLEDE STEEL CO.		FABRICATION CONT. NO. W.T.C. 221	SHEET NO. ST 215BL

1

FABRICATION REQUIREMENTS

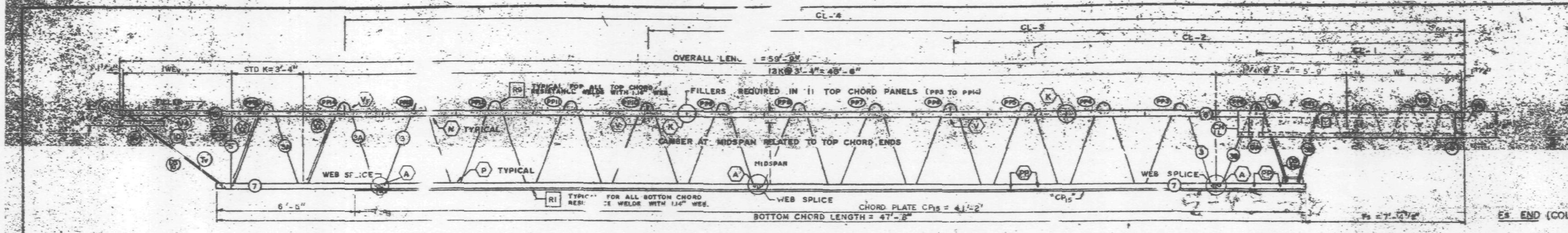

TRUSS ELEVATION

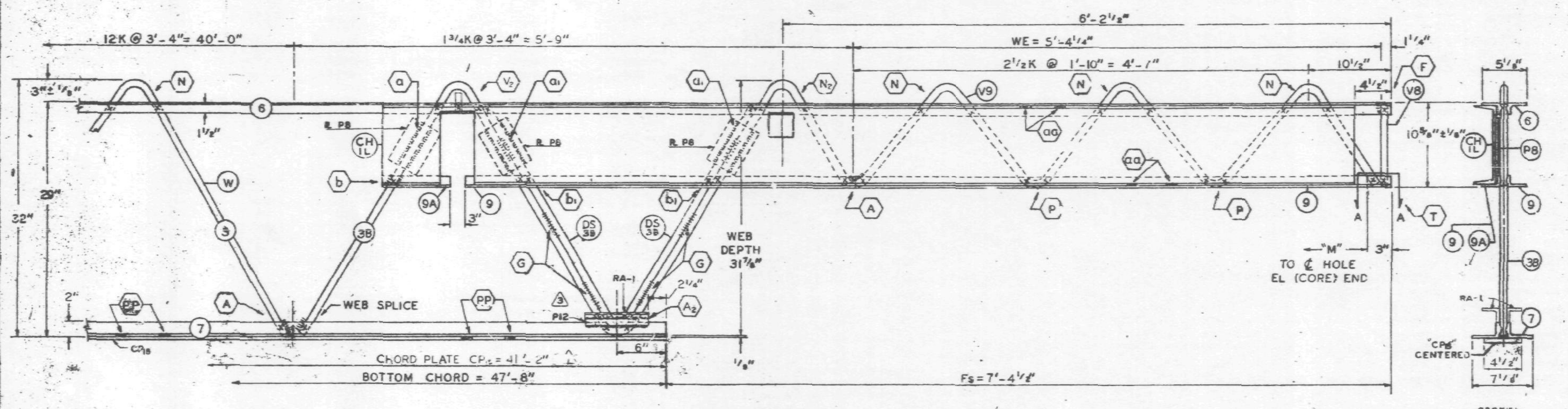

Es END (COLUMN)

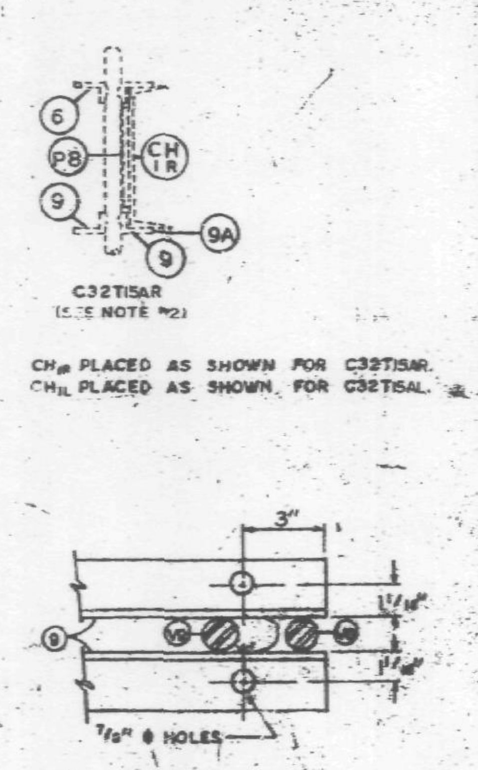

SECTION A-A

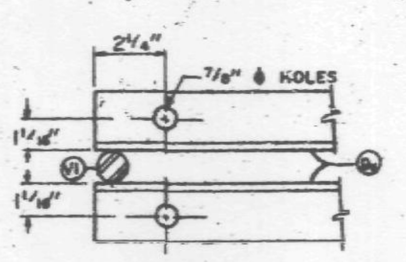

SECTION B-B

ALL PANEL POINTS RESISTANCE WELDED. (x).
ARC WELDS INDICATED AT SHADED AREAS AND AT BOTTOM CHORD WEB SPLICES.
LETTERS IN HEXAGON INDICATE WELD DETAIL, ie., (A).
LETTERS AND NUMBERS IN SQUARES INDICATE RESISTANCE WELD STRENGTH IDENTIFIED IN THE QUALITY CONTROL PROGRAM, ie., [R1].
ALL WELD DETAILS SHOWN ON SHEETS ST290, ST291, ST292 & ST293.
ALL CHANNEL DETAILS SHOWN ON SHEET ST 407.
CHORD PLATE DETAILS SHOWN ON SHEET ST 283.
SEE SHEET ST 295 FOR V1 & V4 DETAILS.

NOTE 2

ALL DETAILS & ELEVATIONS SHOWN FOR C32T15AL TRUSSES ARE APPLICABLE TO C32T15AR TRUSSES WITH CHANNEL CHIR AND BEARING ANGLE 9A PLACED ON OPP. HAND AS SHOWN.

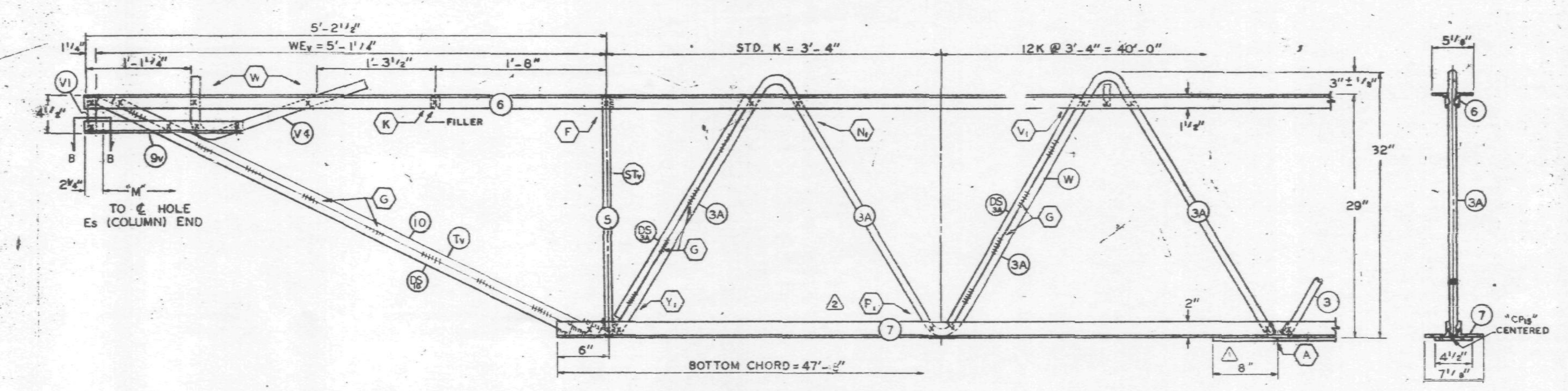

EL END (CORE)

NO.	DATE	REVISION	BY
3	12-10-68	AS NOTED	G.D.C.
2	11-7-68	AS NOTED	G.D.C.
1	10-31-68	CP_{15}	LWH

3 REF. DRWG.

7-AB1-18	10-4-68
7-AB1-54	11-25-68
7-AB1-53	7-22-68
7-AB3-2	1-3-68
7-AB3-24	8-15-68
7-AB4-17 & 17.2	10-4-68
SA-124	10-11-68
7-AB1-55	10-15-68

PAINT

LACLEDE ELECTROCOAT
RED NO. 10001

TRUSS DESIGNATION	TOP CHORD TWO ANGLES				BOTTOM CHORD TWO ANGLES				MAIN WEB "W"					FILLER		"M" C/C HOLES	CHORD PLATE 1				CONNECTION FILLER			CHANNEL PLATES					REINFORCING ANGLES 3				SPECIAL PLATES			
3	MK.	TYPE STEEL	CHORD SIZE	LENGTH	MK.	TYPE STEEL	CHORD SIZE	LENGTH	MK.	TYPE STEEL	DIA.	LENGTH	NO. OF K	NO.	DIA.		MK.	TYPE STEEL	SIZE	LENGTH	NO.	DIA.	LENGTH	MK	TYPE STEEL	PCS.	SIZE	LENGTH	MK.	TYPE STEEL	ANGLE SIZE	(2 REQ'D) LENGTH	MK.	TYPE STEEL	SIZE	(2 REQ'D) LENGTH
C32T15AL-599	6	A242	2"x1 1/2"x.37"	59'-9"	7	A36	3"x2"x.37"	47'-8"	3 3A 3B	A242 A242 A242	1.14" 1.14" 1.14"	68'-8 1/4" 12'-5 1/2" 10'-7 5/8"	11K @ 3'-4" = 36'-8" 2K @ 3'-4" = 6'-8" 1 3/4K @ 3'-4" = 5'-9"	12	1.14	59'-3 3/4"	CP_{15}	A36	4 1/2x.39	41'-2"	4	1.14	3"	P8	A36	3	4 1/2x.39	5 1/2"	[illegible]	A36	3"x2"x.37"	7 1/2"	12	A36	1"x 3/8"	7 1/2"

COLUMN END

Es END	TRUSS DESIGNATION	BEARING ANGLES					WE	DOUBLE STRUT				CHORD PLATE				END STIFFENER MK. V8			END STIFFENER MK. V9			END STIFFENER MK. V10			CHANNEL (SEE NOTE #2)			
	3	MK.	TYPE STEEL	CHORD SIZE	PCS.	LENGTH		MK.	TYPE STEEL	DIA.	LENGTH (2 REQ'D)	MK.	TYPE STEEL	SIZE	LENGTH	TYPE STEEL	DIA.	LENGTH	TYPE STEEL	DIA.	LENGTH	TYPE STEEL	DIA.	LENGTH	MK.	TYPE STEEL	CHANNEL SIZE	LENGTH
	C32T15AL-599	9 9A	A242 A242	2"x1 1/2"x.25" 2"x1 1/2"x.25"	2 1	9'-5" 8 1/2"	5'-4 1/4"	DS 3B	A242	1.14	2'-6 3/4"	-	—	—	—	A242	1.14	10 1/2"	A242	1.14	8'-3 7/8"	—	—	—	CHIL CHIR	A36 A36	10[30 10[30	10'-0" 10'-0"

CHECK DIMENSION FOR TRUSS FAB.

LOCATION OF TRANS. TRUSS				
CL-1	CL-2	CL-3	CL-4	Fs
9'-6 1/2"	22'-10 1/2"	36'-2 1/2"	49'-6 1/2"	7'-4 1/2"

CORE END

EL END	TRUSS DESIGNATION	BEARING ANGLES				WE_v	DIAGONAL "T_v" STRUT				VERTICAL "ST_v" STRUT				END STIFFENER MK. V1			END STIFFENER MK. V2			END STIFFENER MK. V4			DOUBLE STRUT				DOUBLE STRUT				DOUBLE STRUT			
	3	MK.	TYPE STEEL	CHORD SIZE	LENGTH		MK.	TYPE STEEL	DIA.	LENGTH	MK.	TYPE STEEL	DIA.	LENGTH	TYPE STEEL	DIA.	LENGTH	TYPE STEEL	DIA.	LENGTH	TYPE STEEL	DIA.	LENGTH	MK.	TYPE STEEL	DIA.	LENGTH	MK.	TYPE STEEL	DIA.	LENGTH (2 REQ'D)	MK.	TYPE STEEL	DIA.	LENGTH
	C32T15AL-599	9v	A242	2"x1 1/2"x.25"	1'-7"	5'-1 1/4"	10	A242	1.14	5'-4 7/8"	5	A242	1.14	2'-4 7/8"	A242	1.14	[illegible] 3/8"	—	—	—	A242	1.14	2'-2 1/2"	DS 10	A242	.75	5'-4 7/8"	DS 3A	A242	.75	2'-6 3/4"	—	—	—	—

2

FLOOR TRUSS DETAILS
FOR
WORLD TRADE CENTER - N.Y.C.
FOR
THE PORT OF NEW YORK AUTHORITY

FLOOR TRUSS C32T15AL x 59'-9" LONG (SEE NOTE #2)

WORLD TRADE CENTER TOWERS A & B

FABRICATION BY: LACLEDE STEEL COMPANY

FABRICATED AT MADISON, ILLINOIS	DESIGN DRAWING NO. 7-AB1-14	PLATE
APPROVED FOR FABRICATION BY: James White FOR P.O.N.Y.A. DATE 12/16/68	DRAWN BY: gdc DATE OCT. 1, 1968	
APPROVED FOR FABRICATION BY: FOR FABRICATOR DATE	CHECKED BY: T.M. CHURA DATE OCT. 1, 1968	IN CHARGE OF PROD. DEV.
LACLEDE STEEL CO. DETAILED BY: A. CARL WEBER	FABRICATION CONT. NO. W.T.C. 221	SHEET NO. ST 215AL

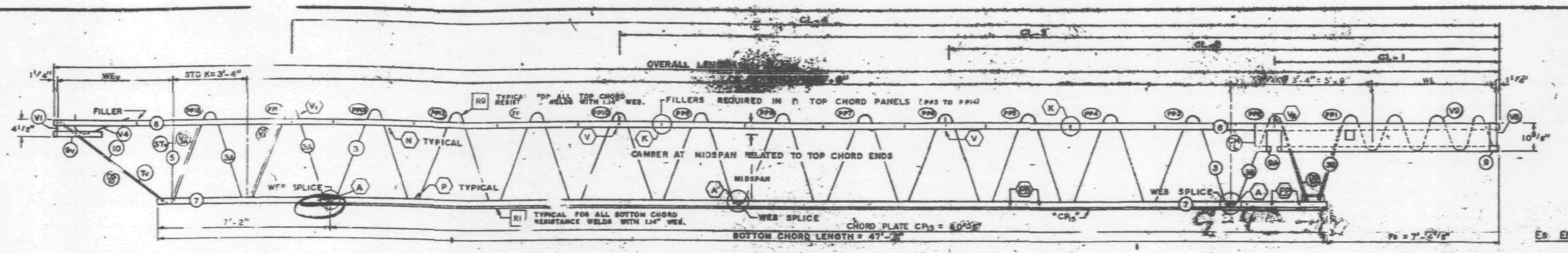

EL END (CORE)

TRUSS ELEVATION

Es END (COLUMN)

FABRICATION REQUIREMENTS	DESIGN	TOLERANCE
CAMBER AT MIDSPAN	2 1/16"	± 3/8"
DESIGN DEPTH	29"	± 1/4"
PANEL "K"	3'-4"	± 1/4"
OVERALL LENGTH	59'-9"	± 3/8"
WEB DEPTH	31 7/8"	± 1/4"

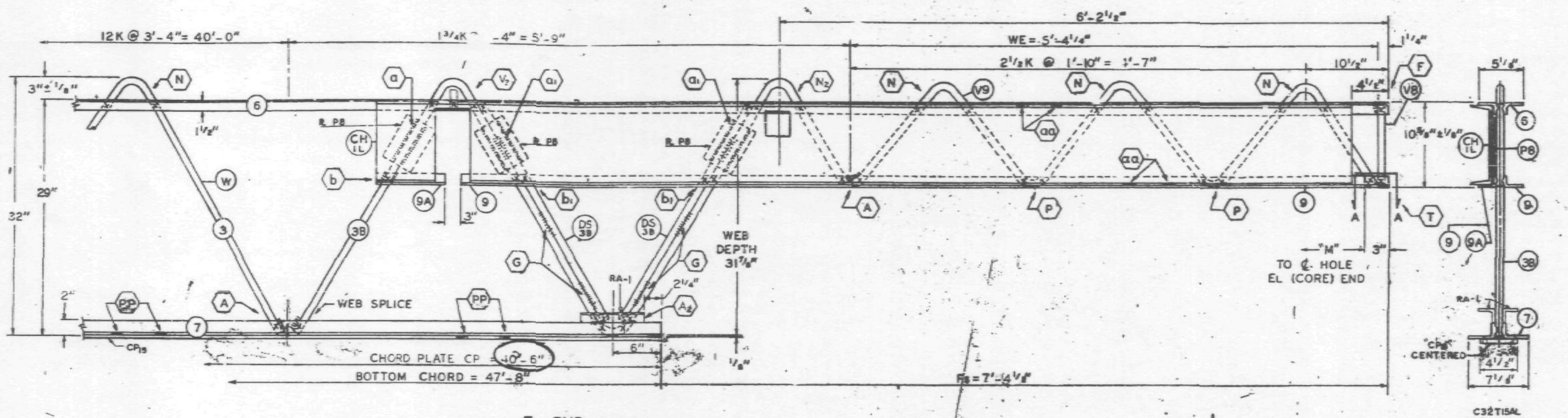

Es END (COLUMN)

ALL PANEL POINTS RESISTANCE WELDED. (x).
ARC WELDS INDICATED AT SHADED AREAS AND AT BOTTOM CHORD WEB SPLICES.
LETTERS IN HEXAGON INDICATE WELD DETAIL, ie., (A).
LETTERS AND NUMBERS IN SQUARES INDICATE RESISTANCE WELD STRENGTH IDENTIFIED IN THE QUALITY CONTROL PROGRAM, ie., [R1].
ALL WELD DETAILS SHOWN ON SHEETS ST290, ST291, ST292 & ST293.
ALL CHANNEL DETAILS SHOWN ON SHEET ST 407.
CHORD PLATE DETAILS SHOWN ON SHEET ST 283.
SEE SHEET ST 295 FOR V1 & V4 DETAILS.

NOTE 2

ALL DETAILS & ELEVATIONS SHOWN FOR C32T15AL TRUSSES ARE APPLICABLE TO C32T15AR TRUSSES WITH CHANNEL CHIR AND BEARING ANGLE 9A PLACED ON OPP. HAND AS SHOWN.

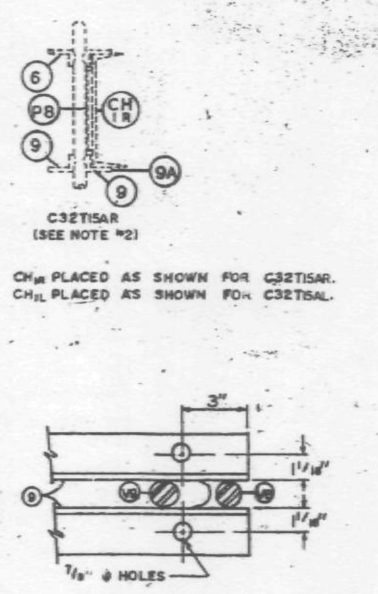

SECTION A-A

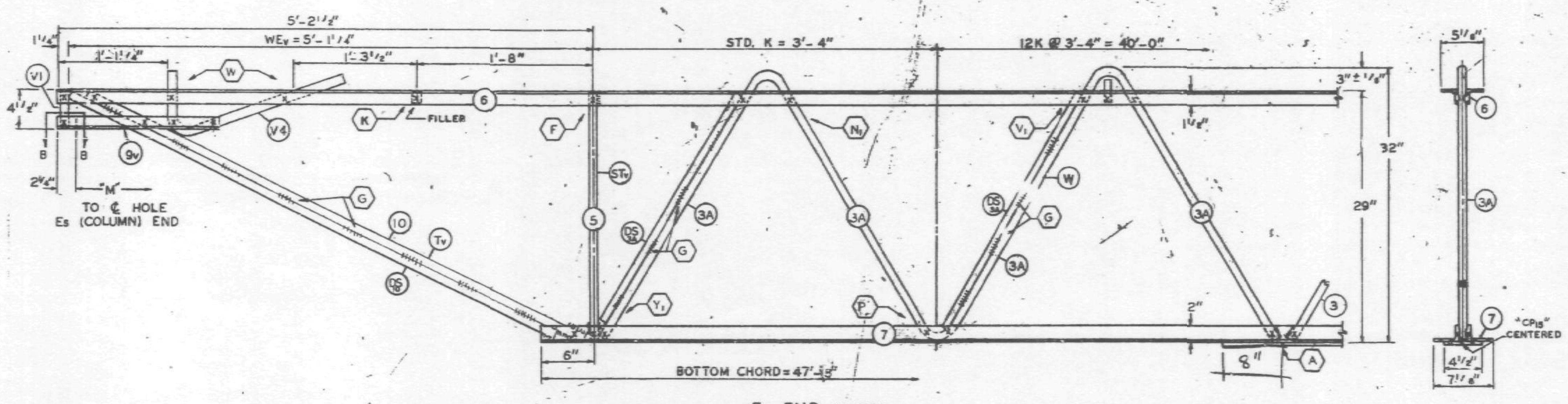

EL END (CORE)

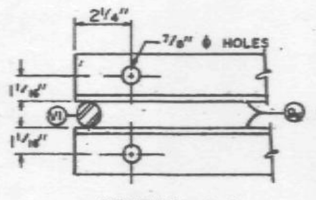

SECTION B-B

NO.	DATE	REVISION	BY

REF. DRWG.

7-AB1-15	8-15-68
7-AB1-54	8-15-68
7-AB1-53 & 55	7-22-68
7-AB3-2	1-3-68
7-AB3-24	8-15-68
7-AB4-17 & 17.2	8-15-68
SA-124	8-1-68

SKILLING-HELLE CHRISTIANSEN-ROBERTSON Structural & Civil Engineers
10/29/68 SK

PAINT
LACLEDE ELECTROCOAT
RED NO. 10001

TRUSS DESIGNATION	TOP CHORD TWO ANGLES MK.	TYPE STEEL	CHORD SIZE	LENGTH	BOTTOM CHORD TWO ANGLES MK.	TYPE STEEL	CHORD SIZE	LENGTH	MAIN WEB "W" MK.	TYPE STEEL	DIA.	LENGTH	NO. OF K
24T15AL-599	6	A242	2"x1 1/2"x.37"	59'-_"	7	A36	3"x2"x.37"	47'-8"	3	A242	1.14"	[illegible]	11K @ 3'-4" = 36'-8"
									3A	A242	1.14"	[illegible]	2K @ 3'-4" = 6'-8"
									3B	A242	1.14"	10'-7 5/8"	1 3/4K @ 3'-4" = 5'-9"

TRUSS DESIGNATION	FILLER NO.	DIA.	"M" C/C HOLES	CHORD PLATE MK.	TYPE STEEL	SIZE	LENGTH	CONNECTION FILLER NO.	DIA.	LENGTH	CHANNEL PLATES MK	TYPE STEEL	PCS.	SIZE	LENGTH	REINFORCING ANGLES MK.	TYPE STEEL	PCS.	SIZE	LENGTH
24T15AL-599	12	1.14	59'-3 3/4"	CP18	A36	[illegible]	40'-6"	4	1.14	3"	P8	A36	3	[illegible]	5 1/2"	RA1	A36	2	3"x2"x.37"	7 1/2"

COLUMN END

Es END TRUSS DESIGNATION	BEARING ANGLES MK.	TYPE STEEL	CHORD SIZE	PCS.	LENGTH	WE	DOUBLE STRUT MK.	TYPE STEEL	DIA.	LENGTH (2 REQ'D)	CHORD PLATE MK.	TYPE STEEL	SIZE	LENGTH
24T15AL-599	9	A242	2"x1 1/2"x.25"	2	9'-5"	5'-4 1/4"	DS	A242	1.14	2'-6 3/4"	—	—	—	—
	9A	A242	2"x1 1/2"x.25"	1	8 1/2"									

Es END TRUSS DESIGNATION	END STIFFENER MK. V8 TYPE STEEL	DIA.	LENGTH	MK. V9 TYPE STEEL	DIA.	LENGTH	MK. V10 TYPE STEEL	DIA.	LENGTH	CHANNEL (SEE NOTE #2) MK.	TYPE STEEL	CHANNEL SIZE	LENGTH
24T15AL-599	A242	1.14	10 1/2"	A242	1.14	8'-3 7/8"	—	—	—	CHIL	A36	10 ⊏ 30	10'-0"
										CHIR	A36	10 ⊏ 30	10'-0"

CORE END

EL END TRUSS DESIGNATION	BEARING ANGLES MK.	TYPE STEEL	CHORD SIZE	LENGTH	WEv	DIAGONAL "Tv" STRUT MK.	TYPE STEEL	DIA.	LENGTH	VERTICAL "STv" STRUT MK.	TYPE STEEL	DIA.	LENGTH
24T15AL-599	9v	A242	2"x1 1/2"x.25"	1'-7"	5'-1 1/4"	10	A242	1.14	5'-4 7/8"	5	A242	1.14	2'-4 3/4"

EL END TRUSS DESIGNATION	END STIFFENER MK. V1 TYPE STEEL	DIA.	LENGTH	MK. V2 TYPE STEEL	DIA.	LENGTH	MK. V4 TYPE STEEL	DIA.	LENGTH	DOUBLE STRUT MK.	TYPE STEEL	DIA.	LENGTH	DOUBLE STRUT MK.	TYPE STEEL	DIA.	LENGTH (2 REQ'D)	DOUBLE STRUT MK.	TYPE STEEL	DIA.	LENGTH
24T15AL-599	A242	1.14	4 3/8"	—	—	—	A242	1.14	2'-2 1/2"	DS10	A242	.75	5'-4 7/8"	DS3A	A242	.75	2'-6 3/4"	—	—	—	—

CHECK DIMENSION FOR TRUSS FAB.

LOCATION OF TRANS. TRUSS				
CL-1	CL-2	CL-3	CL-4	Fs
9'-6 1/2"	22'-10 1/2"	36'-2 1/2"	49'-6 1/2"	7'-4 1/4"

FLOOR TRUSS DETAILS
FOR
WORLD TRADE CENTER - N.Y.C.
FOR
THE PORT OF NEW YORK AUTHORITY

FLOOR TRUSS C32T15AL x 59'-9" LONG (SEE NOTE #2)
WORLD TRADE CENTER TOWERS A & B

FABRICATION BY: LACLEDE STEEL COMPANY

FABRICATED AT MADISON, ILLINOIS		DESIGN DRAWING NO. 7-AB1-16	PLATE ____
APPROVED FOR FABRICATION BY: ____ FOR P.O.N.Y.A.	DATE	DRAWN BY: gdc DATE OCT. 1, 1968	
APPROVED FOR FABRICATION BY: ____ FOR FABRICATOR	DATE	CHECKED BY: T.M.CHURA DATE OCT. 1, 1968	IN CHARGE OF PROD. DEV.
DETAILED BY: A. CARL WEBER		FABRICATION CONT. NO. W.T.C. 221	SHEET NO. ST 215AL

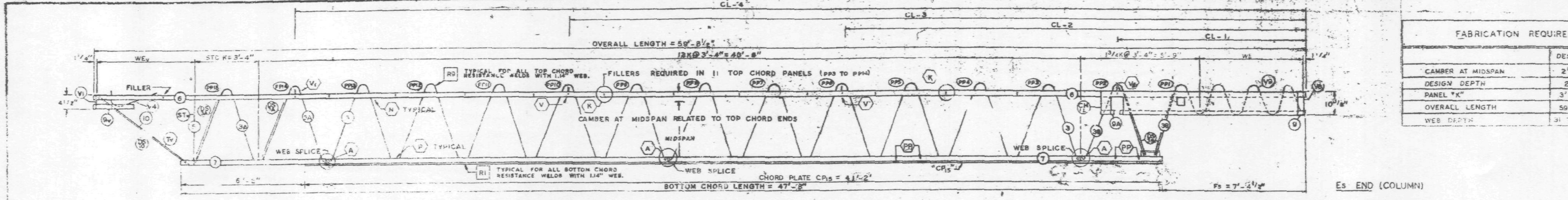

EL END (CORE)

TRUSS ELEVATION

Es END (COLUMN)

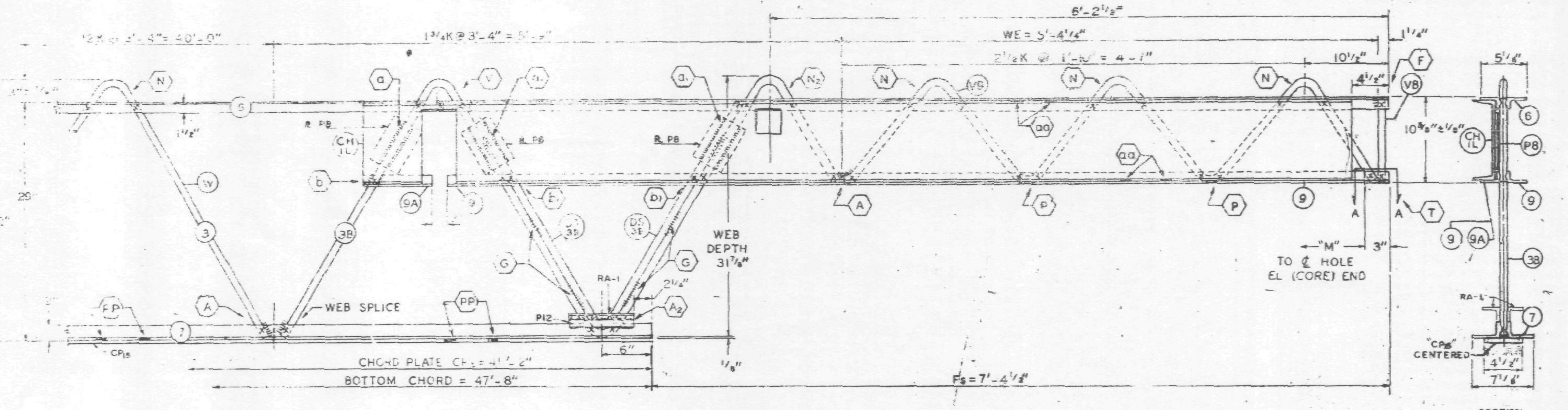

Es END (COLUMN)

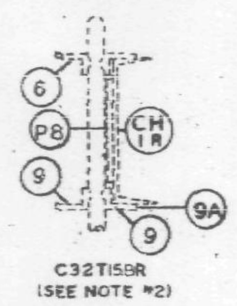

ALL PANEL POINTS RESISTANCE WELDED. [illegible] ARC WELDS INDICATED AT SHADED AREAS AND AT BOTTOM CHORD WEB SPLICES. [illegible] LETTERS IN HEXAGON INDICATE WELD DETAIL [illegible] (A). LETTERS AND NUMBERS IN SQUARES INDICATE RESISTANCE WELD STRENGTH [illegible] IN THE QUALITY CONTROL PROGRAM [illegible]. ALL WELD DETAILS SHOWN ON SHEETS ST290, ST291, ST292 & ST293. ALL CHANNEL DETAILS SHOWN ON SHEET ST407. CHORD PLATE DETAILS SHOWN ON SHEET ST283. SEE SHEET ST295 FOR V1 & V4 DETAILS.

NOTE 2

ALL DETAILS & ELEVATIONS SHOWN FOR C32T15BL TRUSSES ARE APPLICABLE TO C32T15BR TRUSSES WITH CHANNEL CH1R AND BEARING ANGLE 9A PLACED ON OPP. HAND [illegible].

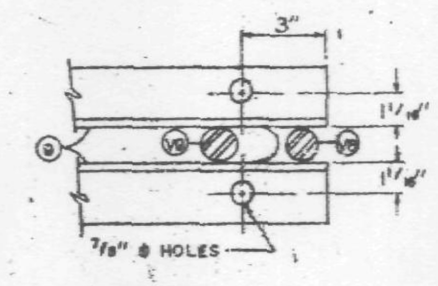

SECTION A-A

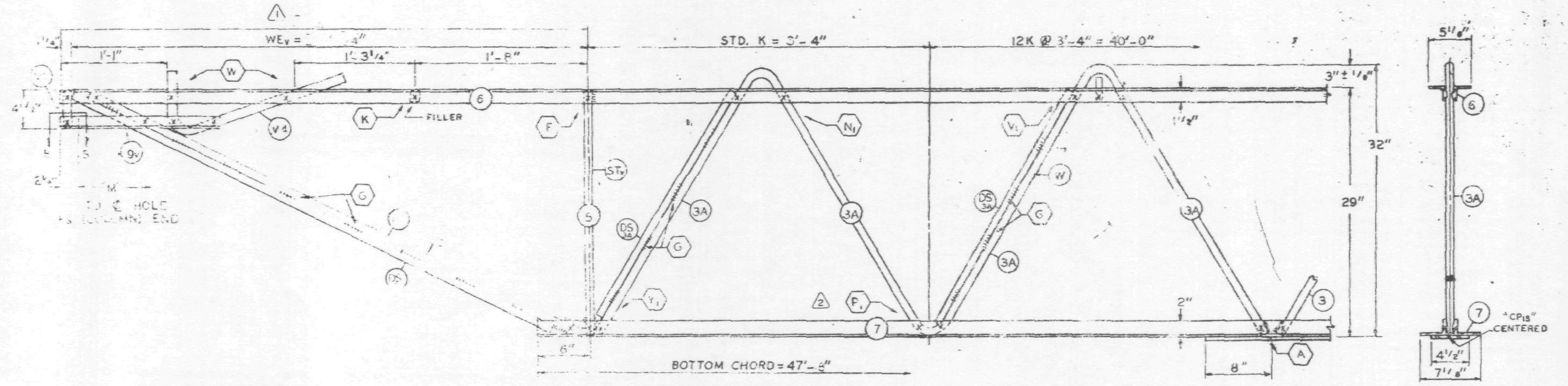

EL END (CORE)

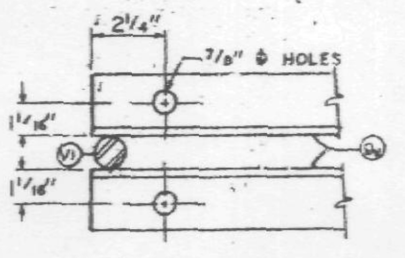

SECTION B-B

FABRICATION REQUIREMENTS

	DESIGN	TOLERANCE
CAMBER AT MIDSPAN	2¹/₁₆"	± 3/8"
DESIGN DEPTH	29"	± 1/4"
PANEL "K"	3'-4"	± 1/4"
OVERALL LENGTH	59'-8½"	± 3/8"
WEB DEPTH	31 7/8"	± 1/4"

NO	DATE	REVISION	BY
[illegible]	8-5-69	AS NOTED	G.D.C.
[illegible]	[illegible]	NOTED	

REF. DRWG.

[illegible]	10-4-68
[illegible]	1-6-69
[illegible]	7-20-68
[illegible]	1-13-69
[illegible]	4-15-68
[illegible]	10-4-68
[illegible]	1-6-69
[illegible]	10-15-68
7-A84-17.2	12-20-68

PAINT

LACLEDE ELECTROCOAT
RED NO. 10001

TRUSS DESIGNATION	TOP CHORD TWO ANGLES MK.	TYPE STEEL	CHORD SIZE	LENGTH	BOTTOM CHORD TWO ANGLES MK.	TYPE STEEL	CHORD SIZE	LENGTH	MAIN WEB "W" MK.	TYPE STEEL	DIA.	LENGTH	NO. OF K	FILLER NO.	DIA.	"M" C/C HOLES	CHORD PLATE MK.	TYPE STEEL	SIZE	LENGTH	CONNECTION FILLER NO.	DIA.	LENGTH	CHANNEL PLATES MK.	TYPE STEEL	PCS.	SIZE	LENGTH	REINFORCING ANGLES MK.	TYPE STEEL	ANGLE SIZE	(2 REQ'D) LENGTH	SPECIAL PLATES MK.	TYPE STEEL	SIZE	(2 REQ'D) LENGTH
C32T15BL-5985	6	A242	2"x1½"x.37"	59'-8½"	7	A36	3"x2"x.37"	47'-8"	3 / 3A / 3B	A242 / A242 / A242	1.14" / 1.14" / 1.14"	68'-6¼" / 12'-5½" / 10'-7⅝"	11K @ 3'-4" = 36'-8" / 2K @ 3'-4" = 6'-8" / 1¾K @ 3'-4" = 5'-9"	12	1.14	59'-3¼"	CP15	A36	4½x.39	41'-2"	4	1.14	3"	P8	A36	3	4½x.39	5½	[illegible]	A36	3"x2"x.37"	7'-½"	[illegible]	A36	[illegible]	7½"

Es END TRUSS DESIGNATION	BEARING ANGLES MK.	TYPE STEEL	CHORD SIZE	PCS.	LENGTH	WE	DOUBLE STRUT MK.	TYPE STEEL	DIA.	LENGTH (2 REQ'D)	CHORD PLATE MK.	TYPE STEEL	SIZE	LENGTH	END STIFFENER MK. V8 TYPE STEEL	DIA.	LENGTH	MK. V9 TYPE STEEL	DIA.	LENGTH	MK. V10 TYPE STEEL	DIA.	LENGTH	CHANNEL (SEE NOTE #2) MK.	TYPE STEEL	CHANNEL SIZE	LENGTH
C32T15BL-5985	9 / 9A	A242 / A242	2"x1½"x.25" / 2"x1½"x.25"	2 / 1	6'-5" / 8½"	5'-4¼"	DS	A242	1.14	2'-6¾"	-	—	—	—	A242	1.14	10½"	A242	1.14	9⅞"	—	—	—	CH1L / CH1R	A36 / A36	10x30 / 10x30	[illegible] / [illegible]

CHECK DIMENSION FOR TRUSS FAB

LOCATION OF TRANS. TRUSS				
CL-1	CL-2	CL-3	CL-4	S
9'-6½"	22'-10½"	36'-2½"	49'-6½"	7'-[illegible]"

CORE END TRUSS DESIGNATION	BEARING ANGLES MK.	TYPE STEEL	CHORD SIZE	LENGTH	WEv	DIAGONAL "Tv" STRUT MK.	TYPE STEEL	DIA.	LENGTH	VERTICAL "STv" STRUT MK.	TYPE STEEL	DIA.	LENGTH	END STIFFENER MK. V1 TYPE STEEL	DIA.	LENGTH	MK. V2 TYPE STEEL	DIA.	LENGTH	MK. V4 TYPE STEEL	DIA.	LENGTH	DOUBLE STRUT MK.	TYPE STEEL	DIA.	LENGTH	DOUBLE STRUT MK.	TYPE STEEL	DIA.	LENGTH (2 REQ'D)	DOUBLE STRUT MK.	TYPE STEEL	DIA.	LENGTH
C32T15BL-5985	9v	A242	2"x1½"x.25"	1'-6"	[illegible]	10	A242	1.14	5'-4⅜"	5	A242	1.14	2'-4⅞"	A242	1.14	4⅜"	—	—	—	A242	1.14	2'-2½"	DS	A242	.79	5'-4⅜"	[illegible]	A242	.35	2'-6¾"	—	—	—	—

FLOOR TRUSS DETAILS
FOR
WORLD TRADE CENTER [illegible]
FOR
THE PORT OF NEW YORK AUTHORITY

FLOOR TRUSS C32T15BL x [illegible]-8½" [illegible] (SEE NOTE #2)
WORLD TRADE CENTER TOWERS A & B

FABRICATION BY LACLEDE STEEL COMPANY

FABRICATED AT MADISON, ILLINOIS.		DESIGN DRAWING NO. 7-AB1-14	PLATE
APPROVED FOR FABRICATION FOR P.O.N.Y.A.	DATE 8/11/69	DRAWN BY: gdc DATE APRIL 11, 1969	
APPROVED FOR FABRICATION BY: FOR FABRICATOR LACLEDE STEEL CO.	DATE	CHECKED BY: T.M. CHURA DATE APRIL 11, 1969	IN CHARGE OF PROD. DEV.
DETAILED BY: A. CARL WEBER		FABRICATION CONT. NO. W.T.C. 221-	SHEET NO. ST 215BL

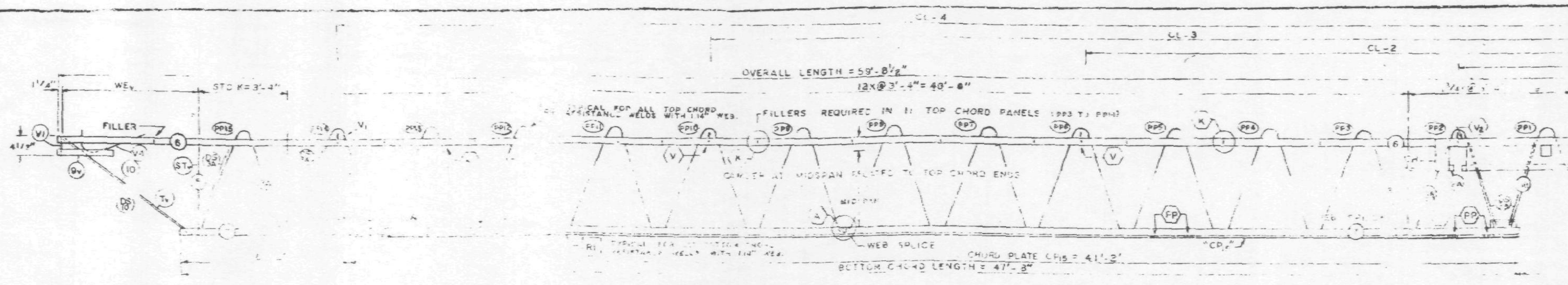

FABRICATION REQUIREMENTS		
	DESIGN	TOLERANCE
CAMBER AT MIDSPAN	2¹/₁₆"	± 3/8"
DESIGN DEPTH	29"	± 1/4"
PANEL "K"	3'-4"	± 1/4"
OVERALL LENGTH	59'-8½	± 3/8"
WEB DEPTH	31 3/8"	± 1/4"

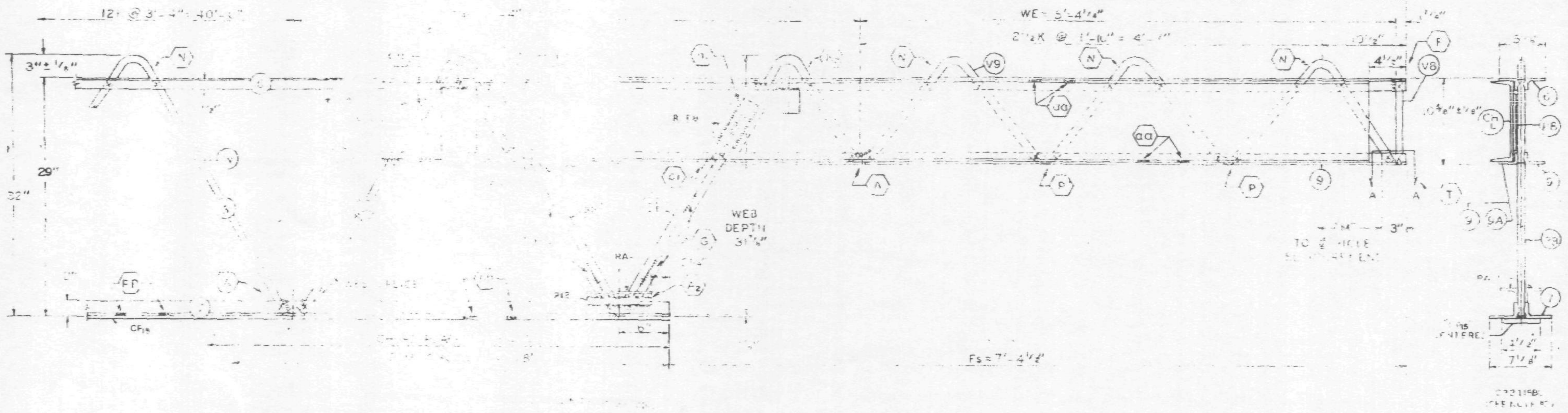

ALL PANEL POINTS RESISTANCE WELDED. (X).
ARC WELDS INDICATED AT SHADED AREAS
AND AT BOTTOM CHORD WEB SPLICES.
LETTERS IN HEXAGON INDICATE WELD DETAIL ie., (A).
LETTERS AND NUMBERS IN SQUARES INDICATE
RESISTANCE WELD STRENGTH IDENTIFIED IN THE
QUALITY CONTROL PROGRAM, ie., [RI].
ALL WELD DETAILS SHOWN ON SHEETS ST290, ST291,
ST292 & ST293.
ALL CHANNEL DETAILS SHOWN ON SHEET ST40A.
CHORD PLATE DETAILS SHOWN ON SHEET ST283.
SEE SHEET ST295 FOR V1 & V4 DETAILS.

NOTE 2

[illegible] SHOWN FOR C32T15BL
TRUSSES ARE APPLICABLE TO C32T15BR TRUSSES
WITH CHANNEL CHR AND BEARING ANGLE 9R
[illegible]

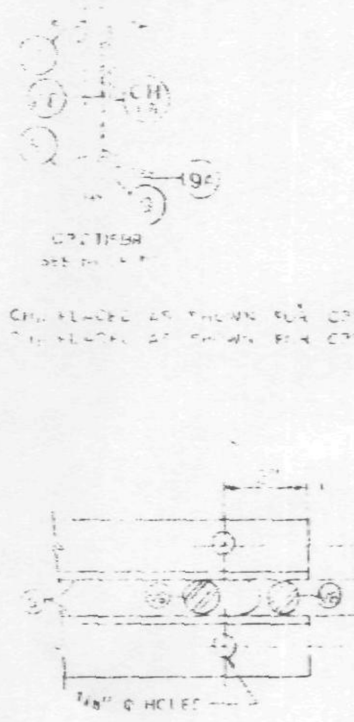

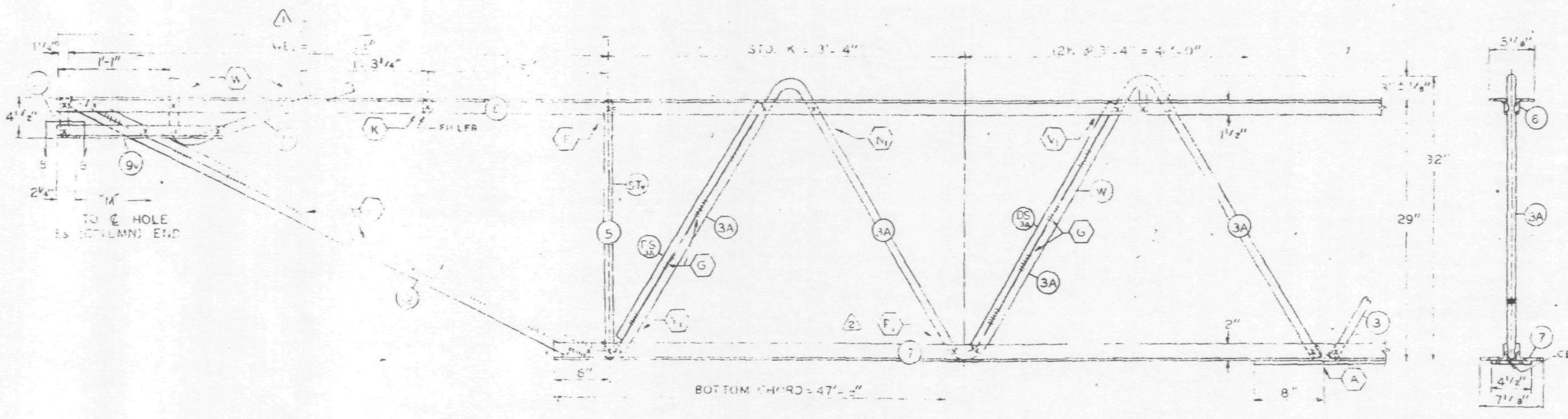

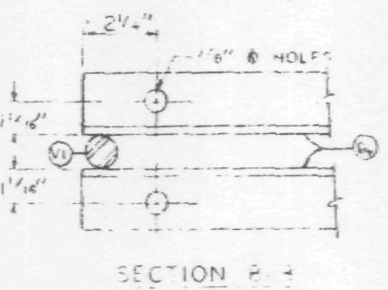

NO.	DATE	REVISION	BY

REF. DRWG.	
7-AB1-14	10-4-68
7-AB1-54	1-8-69
7-AB1-53	7-22-68
7-AB3-2	1-3-68
7-AB3-24	8-15-68
7-AB4-17	10-4-68
SA-124	1-6-69
7-AB1-55	10-15-68
7-AB4-17.2	12-20-68

PAINT
[illegible] ELECTROCOAT
FED NO. 10001

TRUSS DESIGNATION		TOP CHORD ANGLE			[illegible]			MAIN WEB "W"				FILLER		"M" HOLES	CHORD PLATE				CONNECTION FILLER			CHANNEL PLATES					REINFORCING ANGLES				SPECIAL PLATES			
		MK	TYPE STEEL	SIZE				MK	TYPE STEEL	DIA	LENGTH	NO. OF K	NO.	DIA.		MK	TYPE STEEL	SIZE	LENGTH	NO.	DIA.	LENGTH	MK	TYPE STEEL	F.C.S.	SIZE	[illegible]	MK	TYPE STEEL	ANGLE SIZE	(2 REQ'D) LENGTH	MK	TYPE STEEL	SIZE	(2 REQ'D) LENGTH
C32T15BL	59.85	[illegible]	A242	[illegible]"x[illegible]"x.37"	8½"	[illegible]	3"x2"x.37"	[illegible]	A242 / A242 / A242	1.14" / 1.14" / 1.14"	[illegible] / 2'-5½" / 10'-7⁵/₈"	11K @ 3'-4" = 37'-2" / 2K @ 3'-4" = 6'-8" / 1¾K @ 3'-4" = 5'-[illegible]	12	[illegible]	59'-3¼"	CP_{15}	A36	4½x.36"	41'-2"	4	1.14	3"	P6	A36	3	4½x.36"	5½"	RA1	A36	3"x2"x.37"	7½"	P12	A36	[illegible]	[illegible]

COLUMN END

ES	TRUSS DESIGNATION	[illegible]			[illegible]				CHORD PLATE				END STIFFENER MK. V8			MK. V9			MK. V1			CHANNEL (SEE NOTE #2)			
		MK	[illegible]	SIZE	[illegible]	[illegible]	[illegible]	LENGTH	MK	TYPE STEEL	SIZE	LENGTH	TYPE STEEL	DIA.	LENGTH	TYPE STEEL	DIA	LENGTH	TYPE STEEL	DIA	LENGTH	MK	TYPE STEEL	CHANNEL SIZE	LENGTH
	C32T15BL-59.85	[illegible]	[illegible]	[illegible]	[illegible]	A242	1.14	[illegible]¾"	—	—	—	—	A242	1.14	10½"	A242	1.14	8'-3⁷/₈"	—	—	—	CHU / CHR	A36 / A36	10 C 30 / 10 C 30	10'-0" / 10'-0"

CHECK DIMENSION FOR TRUSS FAB LOCATION OF CHANNEL			
CL-1	CL-2	[illegible]	[illegible]
[illegible]½"	22'-10[illegible]"	36'-2[illegible]"	[illegible]

CORE END

EL	TRUSS DESIGNATION	BEARING ANGLE			[illegible]				VERTICAL STRUT				END STIFFENER MK. V1			MK. V2			MK. V4			DOUBLE STRUT				DOUBLE STRUT				DOUBLE STRUT			
		MK	TYPE STEEL	SIZE	[illegible]	MK	TYPE STEEL	DIA	LENGTH	MK	TYPE STEEL	DIA	LENGTH	TYPE STEEL	DIA.	LENGTH	TYPE STEEL	DIA.	LENGTH	TYPE STEEL	DIA	LENGTH	MK	TYPE STEEL	DIA.	LENGTH	MK	TYPE STEEL	DIA.	LENGTH (2 REQ'D)	MK	TYPE STEEL	DIA.	LENGTH
EN	C32T15BL-59.85	9L	A36	2½"x[illegible]"x[illegible]"	1'-6"	10	A242	1.14	[illegible]-3¾	5	A242	1.14	2'-4⁷/₈"	A242	1.14	4³/₈"	—	—	—	A242	1.14	2'-2½"	DS 1B	A242	.75	[illegible] 5'	DS 3A	A242	.75	2'-6¾"	—	—	—	—

FLOOR TRUSS DETAILS
[illegible]
THE PORT OF NEW YORK AUTHORITY

FLOOR TRUSS C32T15BL x [illegible] 8½" [illegible] (SEE NOTE #2)

WORLD TRADE CENTER TOWERS A & B

[illegible] STEEL COMPANY

APPROVED FOR FABRICATION 6/4/69	[illegible] 7-AB1-14	PLATE
[illegible] FOR FABRICATION DATE	DRAWN BY gdc DATE APRIL 11, 1969	
FOR FABRICATOR	CHECKED BY [illegible] CHURA DATE APRIL 11, 1969	IN CHARGE OF PROD. DEV.
CHECKED BY CARL WEBER	FABRICATION CONT. NO. W-[illegible] 221	SHEET NO. ST 215BL

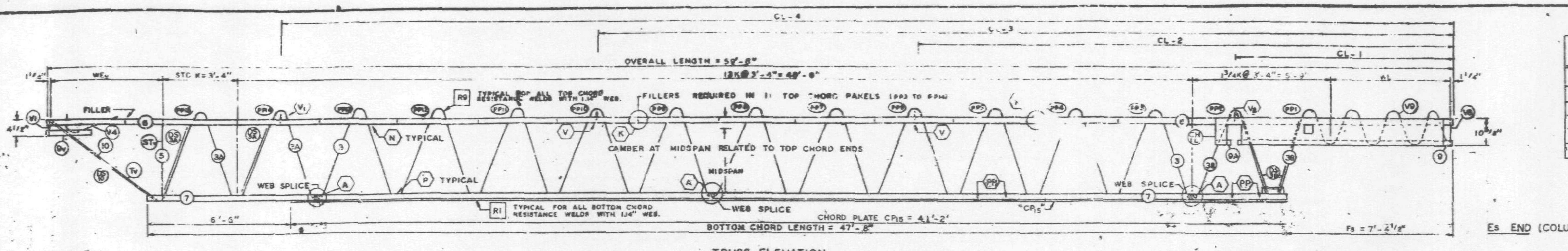

TRUSS ELEVATION

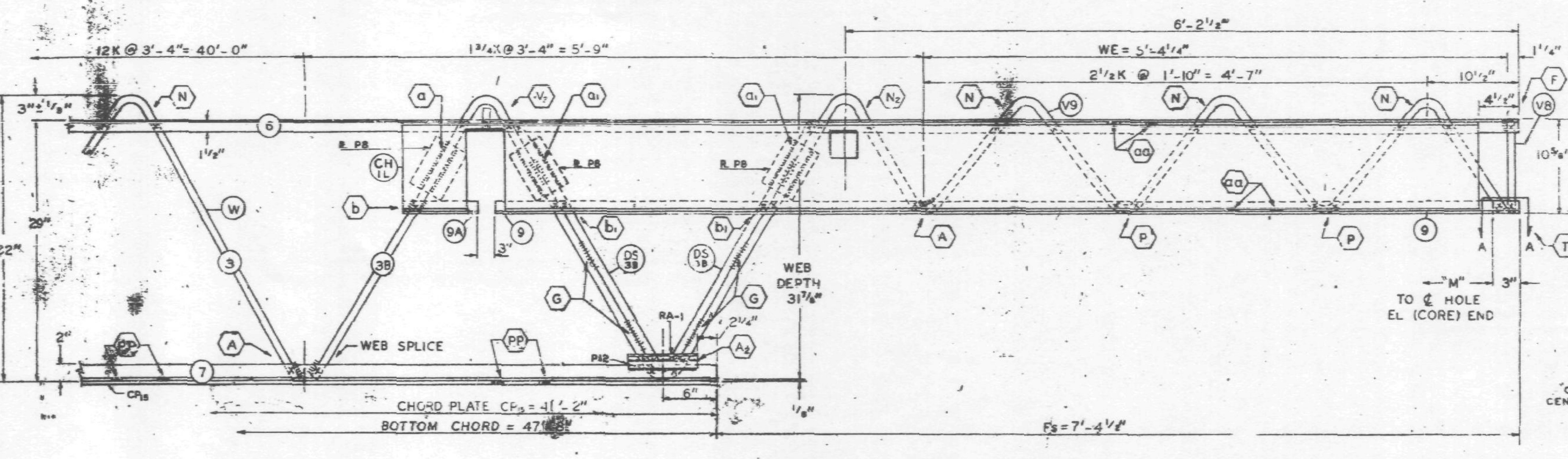

Es END (COLUMN)

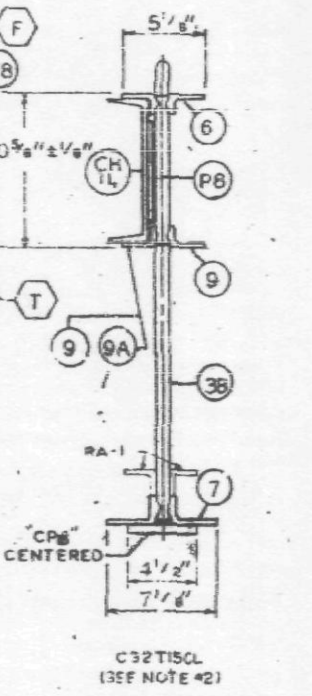

ALL PANEL POINTS RESISTANCE WELDED. (X).
ARC WELDS INDICATED AT SHADED AREAS AND AT BOTTOM CHORD WEB SPLICES.
LETTERS IN HEXAGON INDICATE WELD DETAIL. ie., (A).
LETTERS AND NUMBERS IN SQUARES INDICATE RESISTANCE WELD STRENGTH IDENTIFIED IN THE QUALITY CONTROL PROGRAM. ie., [RI].
ALL WELD DETAILS SHOWN ON SHEETS ST290, ST291, ST292 & ST293.
ALL CHANNEL DETAILS SHOWN ON SHEET ST407.
CHORD PLATE DETAILS SHOWN ON SHEET ST283.
SEE SHEET ST295 FOR VI & V4 DETAILS.

NOTE 2

ALL DETAILS & ELEVATIONS SHOWN FOR C32T15CL TRUSSES ARE APPLICABLE TO C32T15CR TRUSSES WITH CHANNEL CH1R AND BEARING ANGLE 9A PLACED ON OPP. HAND AS SHOWN.

FABRICATION REQUIREMENTS	DESIGN	TOLERANCE
CAMBER AT MIDSPAN	2 1/16"	± 3/8"
DESIGN DEPTH	29"	± 1/4"
PANEL "K"	3'-4"	± 1/4"
OVERALL LENGTH	59'-8"	± 3/8"
WEB DEPTH	31 7/8"	± 1/4"

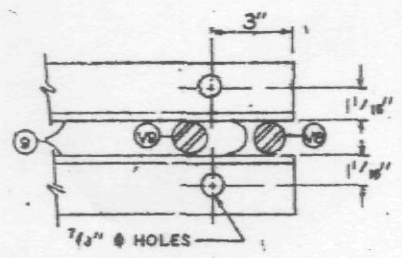

SECTION A-A

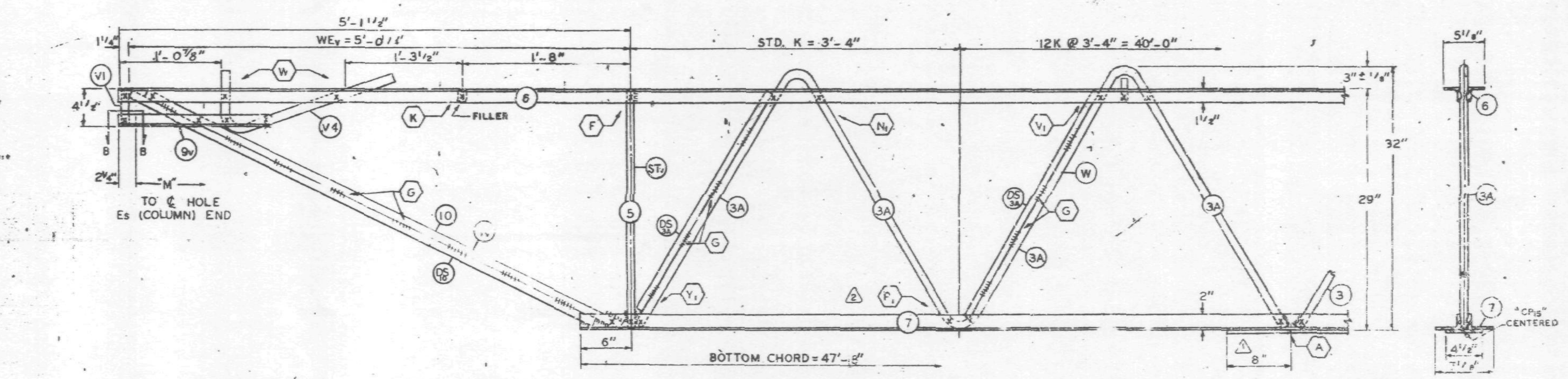

EL END (CORE)

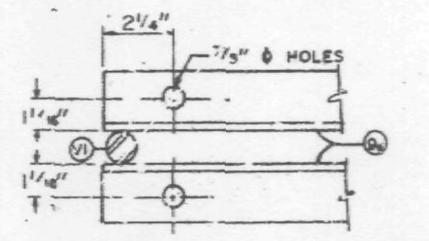

SECTION B-B

NO.	DATE	REVISION	BY

REF. DRWG.	
7-AB1-14	10-4-68
7-AB1-54	11-25-68
7-AB1-53	7-22-68
7-AB3-2	1-3-68
7-AB3-24	8-15-68
7-AB4-17 & 17.2	10-4-68
SA-124	10-11-68
7-AB1-55	10-15-68

PAINT
LACLEDE ELECTROCOAT
RED NO. 10001

TRUSS DESIGNATION	TOP CHORD TWO ANGLES				BOTTOM CHORD TWO ANGLES				MAIN WEB "W"					FILLER		"M" C/C HOLE	CHORD PLATE				CONNECTION FILLER			CHANNEL PLATES					REINFORCING ANGLES				SPECIAL PLATES			
	MK.	TYPE STEEL	CHORD SIZE	LENGTH	MK.	TYPE STEEL	CHORD SIZE	LENGTH	MK.	TYPE STEEL	DIA.	LENGTH	NO OF K	NO.	DIA.		MK.	TYPE STEEL	SIZE	LENGTH	NO.	DIA.	LENGTH	MK.	TYPE STEEL	PCS.	SIZE	LENGTH	MK.	TYPE STEEL	ANGLE SIZE	(2 REQ'D) LENGTH	MK.	TYPE STEEL	SIZE	(2 REQ'D) LENGTH
C32T15CL-598	6	A242	2"x1 1/2"x.37"	59'-8"	7	A36	3"x2"x.37"	47'-8"	3 3A 3B	A242 A242 A242	1.14" 1.14" 1.14"	[illegible] 12'-5 1/2" 10'-7 3/8"	11K @ 3'-4" = 36'-8" 2K @ 3'-4" = 6'-8" 1 3/4K @ 3'-4" = 5'-9"	12	1.14	59'-2 3/4	CP15	A36	4 1/2 x.39	41'-2"	4	1.14	3"	P8	A36	3	4x.36	5 1/2"	RA1	A36	3"x2"x.37"	7 1/2"	P12	A36	1"x 5/8"	7 1/4

Es END	TRUSS DESIGNATION	BEARING ANGLES					WE	DOUBLE STRUT				CHORD PLATE				END STIFFENER MK. V5			END STIFFENER MK. V9			END STIFFENER MK. V10			CHANNEL (SEE NOTE #2)			
		MK.	TYPE STEEL	CHORD SIZE	PCS.	LENGTH		MK.	TYPE STEEL	DIA	LENGTH (2 REQ'D)	MK.	TYPE STEEL	SIZE	LENGTH	TYPE STEEL	DIA.	LENGTH	TYPE STEEL	DIA.	LENGTH	TYPE STEEL	DIA.	LENGTH	MK.	TYPE STEEL	CHANNEL SIZE	LENGTH
	C32T15CL-598	9 9A	A242 A242	2"x1 1/2"x.25" 2"x1 1/2"x.25"	2 1	9'-5" 8 1/2"	5'-4 1/4"	DS 3B	A242	1.14	2'-6 3/4"	-	—	—	—	A242	1.14	10 1/2"	A242	1.14	8'-3 7/8"	—	—	—	CH1L CH1R	A36 A36	10 [30 10 [30	10'-0" 10'-0"

CHECK DIMENSION FOR TRUSS FAB. LOCATION OF TRANS. TRUSS				
CL-1	CL-2	CL-3	CL-4	Fs
9'-6 1/2"	2[illegible]'-10 1/4"	36'-2 1/2"	49'-[illegible] 1/2"	7'-[illegible]

EL END	TRUSS DESIGNATION	BEARING ANGLES				WEv	DIAGONAL "Tv" STRUT				VERTICAL STv STRUT				END STIFFENER MK. V1			END STIFFENER MK. V2			END STIFFENER MK. V4			DOUBLE STRUT				DOUBLE STRUT				DOUBLE STRUT			
		MK.	TYPE STEEL	CHORD SIZE	LENGTH		MK.	TYPE STEEL	DIA.	LENGTH	MK.	TYPE STEEL	DIA	LENGTH	TYPE STEEL	DIA.	LENGTH	TYPE STEEL	DIA.	LENGTH	TYPE STEEL	DIA.	LENGTH	MK.	TYPE STEEL	DIA.	LENGTH	MK.	TYPE STEEL	DIA.	LENGTH (2 REQ'D)	MK.	TYPE STEEL	DIA.	LENGTH
	C32T15CL-598	9v	A242	2"x1 1/2"x.25"	1'-6"	5'-0 1/4"	10	A242	1.14	5'-4 1/4"	5	A242	1.14	2'-4 7/8"	A242	1.14	4 3/8"	—	—	—	A242	1.14	2'-2 1/2"	DS 10	A242	.75	5'-4 1/4"	DS 3A	A242	.75	2'-6 3/4"	—	—	—	—

FLOOR TRUSS DETAILS
FOR
WORLD TRADE CENTER - N.Y.C.
FOR
THE PORT OF NEW YORK AUTHORITY

FLOOR TRUSS C32T15CL x 59'-8" LONG (SEE NOTE #2)
WORLD TRADE CENTER TOWERS A & B

FABRICATION BY LACLEDE STEEL COMPANY

FABRICATED AT MADISON, ILLINOIS		DESIGN DRAWING NO. 7-AB1-14	PLATE
APPROVED FOR FABRICATION [signature] FOR P.N.Y.A.	DATE 4/10/69	DRAWN BY gdc DATE MAR 28, 1969	
APPROVED FOR FABRICATION BY FOR FABRICATOR	DATE	CHECKED BY T.M. CHURA DATE MAR 28 1969	IN CHARGE OF PROD. DEV.
DETAILED BY A. CARL WEBER		FABRICATION CONT. NO. W.T.C. 221	SHEET NO. ST 215CL

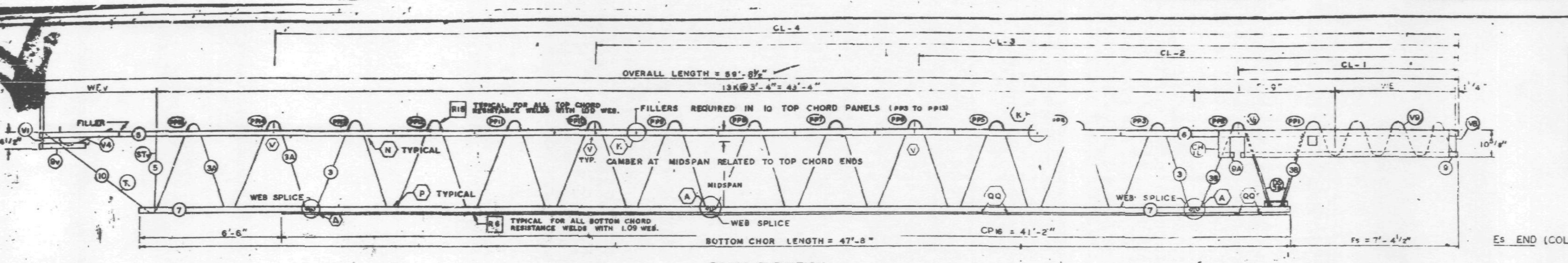

TRUSS ELEVATION

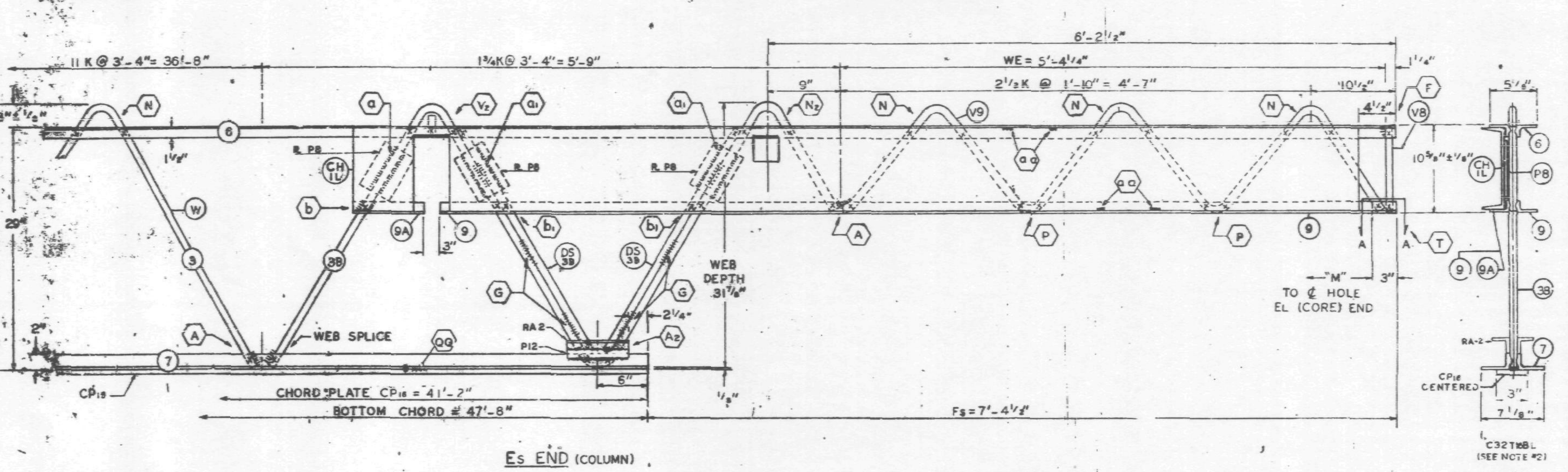

Es END (COLUMN)

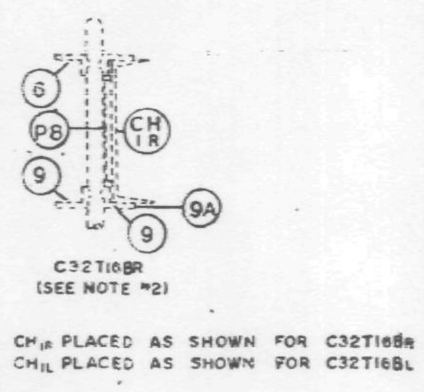

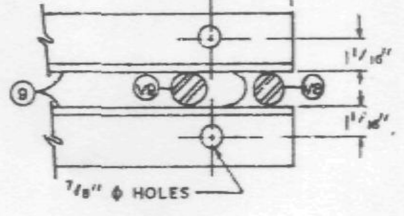

SECTION A-A

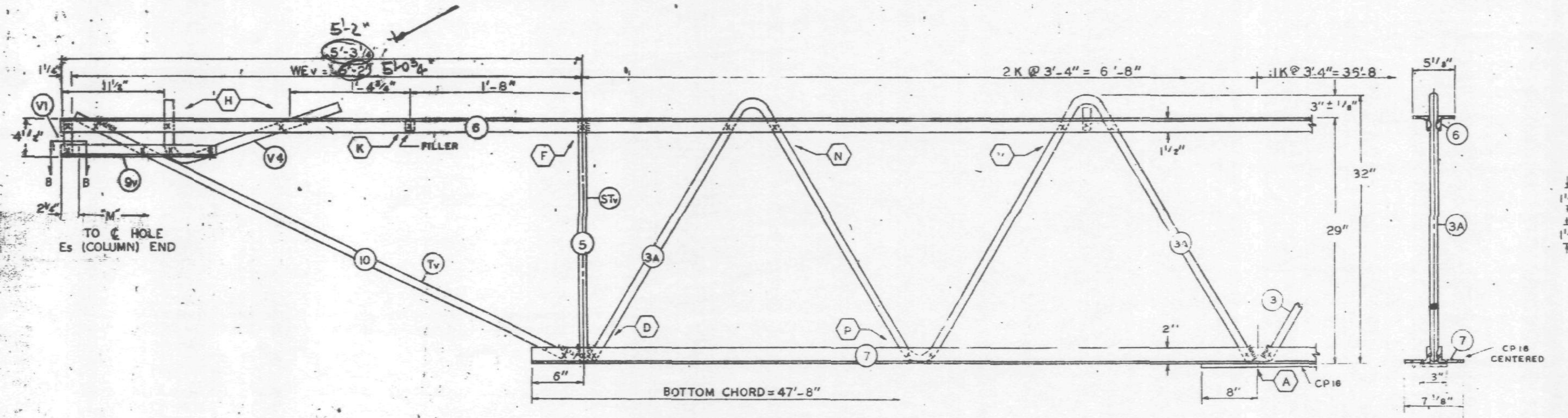

EL END (CORE)

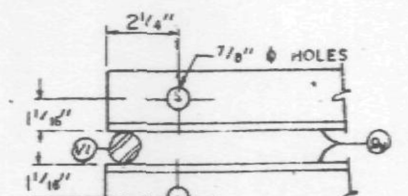

SECTION B-B

FABRICATION REQUIREMENTS	DESIGN	TOLERANCE
CAMBER AT MIDSPAN	2 1/16"	± 3/8"
DESIGN DEPTH	29"	± 1/4"
PANEL K	3'-4"	± 1/4"
OVERALL LENGTH	59'-8½"	± 3/8"
WEB DEPTH	31 7/8"	± 1/4"

ALL PANEL POINTS RESISTANCE WELDED. (x).
ARC WELDS INDICATED AT SHADED AREAS AND AT BOTTOM CHORD WEB SPLICES.
LETTERS IN HEXAGON INDICATE WELD DETAIL, i.e. (A).
LETTERS AND NUMBERS IN SQUARES INDICATE RESISTANCE WELD STRENGTH IDENTIFIED IN THE QUALITY CONTROL PROGRAM, i.e., [QQ].
ALL WELD DETAILS SHOWN ON SHEETS ST290, ST291, ST292 & ST293.
ALL CHANNEL DETAILS SHOWN ON SHEET ST407.
CHORD PLATE DETAILS SHOWN ON SHEET ST 283.

NOTE 2

ALL DETAILS & ELEVATIONS SHOWN FOR C32T16BL TRUSSES ARE APPLICABLE TO C32T16BR TRUSSES WITH CHANNEL CH1R AND BEARING ANGLE 9A PLACED ON OPP. HAND AS SHOWN.

NO.	DATE	REVISION	BY

REF. DRWG.

7-AB1-15	10-4-68
7-AB1-54	1-6-69
7-AB1-53	7-22-68
7-AB3-2	1-3-68
7-AB3-24	8-15-68
7-AB4-17	10-4-68
SA-124	1-6-69
7-AB1-55	10-15-68
7-AB4-17.2	12-20-68

SKILLING - HELLE CHRISTIANSEN - ROBERTSON
Structural & Civil Engineers
☐ APPROVED
☒ APPROVED AS NOTED
☐ RESUBMIT
☐ REJECTED
Date 4/25/69 By SK

PAINT
LACLEDE ELECTROCOAT
RED NO. 10001

TRUSS DESIGNATION	TOP CHORD TWO ANGLES				BOTTOM CHORD TWO ANGLES				MAIN WEB "W"					FILLER		"M" C/C HOLES	CHORD PLATE				CONNECTION FILLERS			CHANNEL PLATES					REINFORCING ANGLES				SPECIAL PLATES			
	MK.	TYPE STEEL	CHORD SIZE	LENGTH	MK.	TYPE STEEL	CHORD SIZE	LENGTH	MK.	TYPE STEEL	DIA.	LENGTH	NO. OF K	NO.	DIA.		MK.	TYPE STEEL	SIZE	LENGTH	NO	DIA	LENGTH	MK	TYPE STEEL	PCS.	SIZE	LENGTH	MK	TYPE STEEL	ANGLE SIZE	(2 REQ'D) LENGTH	MK	TYPE STEEL	SIZE	(2 REQ'D) LENGTH
C32T16BL-598.5	6	A242	2"x1½"x.31	59'-8½"	7	A36	3"x2"x.33"	47'-8"	3 3A 3B	A36 A242 A242	1.09 1.14 1.14	69'-8 1/4" 12'-6 1/2" 10'-7 3/8"	11 K @ 3'-4" = 36'-8" 2 K @ 3'-4" = 6'-8" 1 3/4 K @ 3'-4" = 5'-9"	11	1.09"	59'-3¼"	CP16	A36	3"x25	41'-2"	4	1.09	3"	P8	A36	3	4½"x39	5 1/2"	A2	A36	3"x2"x.33"	7½"	P12	A36	1"x3/8"	7½"

COLUMN END

Es END TRUSS DESIGNATION	BEARING ANGLES					WE	DOUBLE STRUT				CHORD PLATE				END STIFFENER MK. V8			MK. V9			MK. V10			CHANNEL			
	MK.	TYPE STEEL	CHORD SIZE	PCS.	LENGTH		MK.	TYPE STEEL	DIA.	LENGTH (2 REQ'D)	MK.	TYPE STEEL	SIZE	LENGTH	TYPE STEEL	DIA.	LENGTH	TYPE STEEL	DIA.	LENGTH	TYPE STEEL	DIA.	LENGTH	MK.	TYPE STEEL	CHANNEL SIZE	LENGTH
32T16BL-598.5	9 9A	A242 A242	2"x1½"x.25" [illegible]	2 1	9'-6" 8½"	5'-4¼"	DS	A242	1.14	8'-6¾"	—	—	—	—	A242	1.14	10½"	A242	1.14	8'-3 7/8"	—	—	—	CH1L CH1R	A36 A36	10 C 30 10 C 30	10'-0" 10'-0"

CORE END

EL END TRUSS DESIGNATION	BEARING ANGLES				WEv	DIAGONAL "Tv" STRUT				VERTICAL "STv" STRUT				END STIFFENER MK. V1			MK. V2			MK. V4			DOUBLE STRUT				DOUBLE STRUT			
	MK.	TYPE STEEL	CHORD SIZE	LENGTH		MK.	TYPE STEEL	DIA.	LENGTH	MK.	TYPE STEEL	DIA.	LENGTH	TYPE STEEL	DIA.	LENGTH	TYPE STEEL	DIA.	LENGTH	TYPE STEEL	DIA.	LENGTH	MK.	TYPE STEEL	DIA.	LENGTH	MK.	TYPE STEEL	DIA.	LENGTH
C32T16BL-598.5	9v	A242	2"x1½"x.25	1'-6"	5'-3"	10	A242	1.14	5'-6⅛"	5	A242	1.14	2'-4 7/8"	A242	1.14	4 3/8"	—	—	—	A242	1.14	2'-2½"	-	—	—	—	-	—	—	--

CHECK DIMENSION FOR TRUSS FAB.

LOCATION OF TRANS. TRUSS				
CL-1	CL-2	CL-3	CL-4	[illegible]
9'-6½"	2'-10½"	36'-2½"	49'-6½"	7'-4½"

FLOOR TRUSS DETAILS
FOR
WORLD TRADE CENTER - N.Y.C.
FOR
THE PORT OF NEW YORK AUTHORITY

FLOOR TRUSS C32T16BL (SEE NOTE 2) x 59'-8½" LONG
WORLD TRADE CENTER TOWERS A & B

FABRICATION BY: LACLEDE STEEL COMPANY

FABRICATED AT MADISON, ILLINOIS		DESIGN DRAWING NO. 7-AB1-15	PLATE
APPROVED FOR FABRICATION BY ___ FOR P.O.N.Y.A.	DATE	DRAWN BY gdc DATE APRIL 11, 1969	
APPROVED FOR FABRICATION BY ___ FOR FABRICATOR	DATE	CHECKED BY: T.M.CHURA DATE APRIL 11, 1969	IN CHARGE OF PROD. DEV.
DETAILED BY LACLEDE STEEL CO		FABRICATION CONT NO W.T.C. 221	SHEET NO. ST 216BL

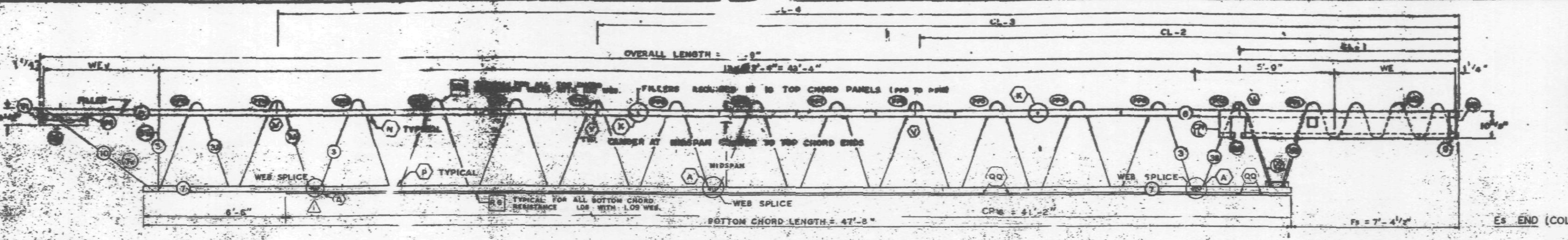

TRUSS ELEVATION

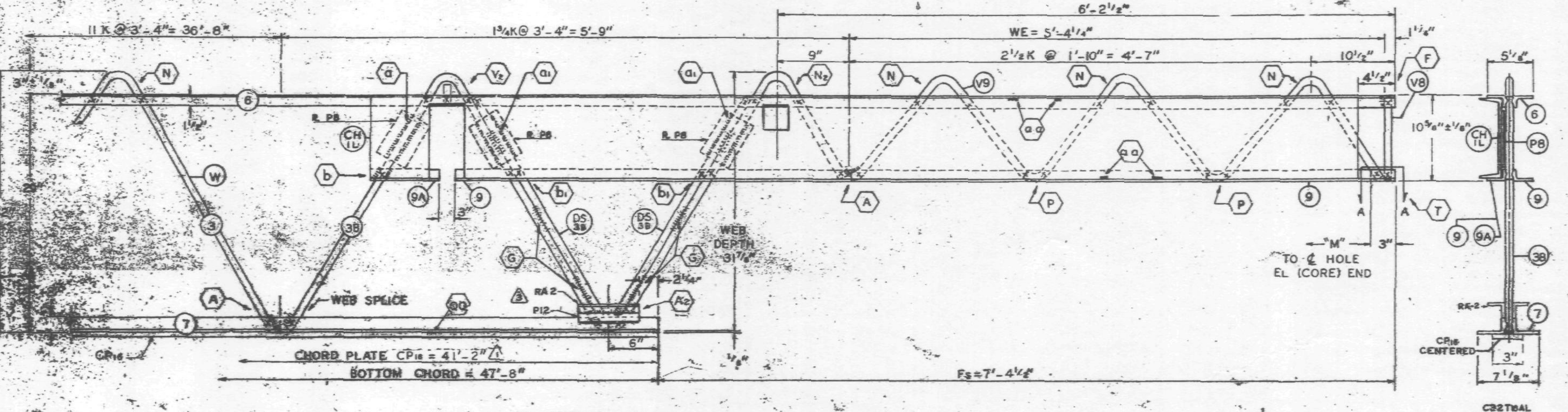

Es END (COLUMN)

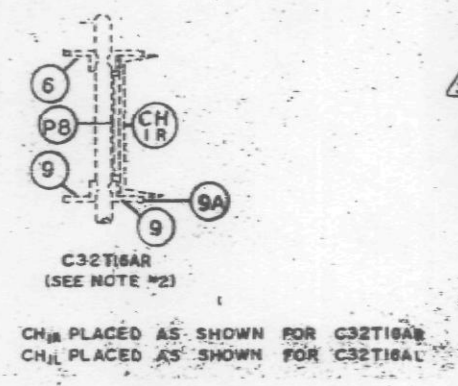

ALL PANEL POINTS RESISTANCE WELDED (x).
ARC WELDS INDICATED AT SHADED AREAS
AND AT BOTTOM CHORD WEB SPLICES.
LETTERS IN HEXAGON INDICATE WELD DETAIL, ie., (A).
LETTERS AND NUMBERS IN SQUARES INDICATE
RESISTANCE WELD STRENGTH IDENTIFIED IN THE
QUALITY CONTROL PROGRAM, ie., [R8].
(3) ALL WELD DETAILS SHOWN ON SHEETS ST290, ST291, ST292 & ST293.
ALL CHANNEL DETAILS SHOWN ON SHEET ST407.
CHORD PLATE DETAILS SHOWN ON SHEET ST283.

NOTE 2

ALL DETAILS & ELEVATIONS SHOWN FOR C32T16AL TRUSSES ARE APPLICABLE TO C32T16AR TRUSSES WITH CHANNEL CHIR AND BEARING ANGLE 9A PLACED ON OPP. HAND AS SHOWN.

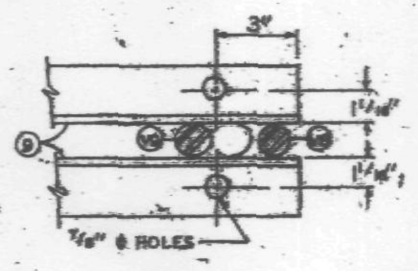

SECTION A-A

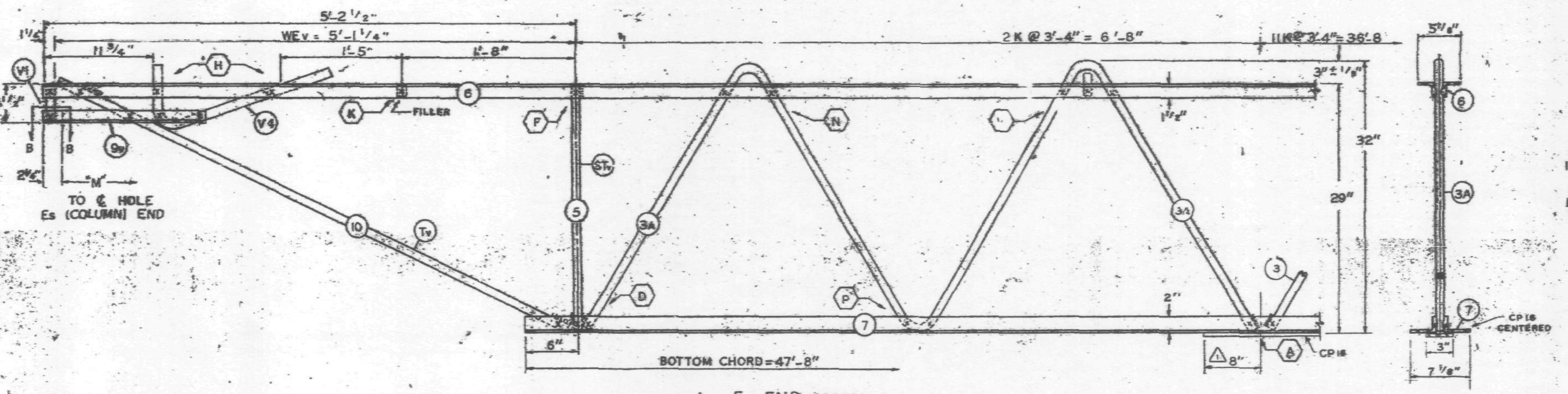

EL END (CORE)

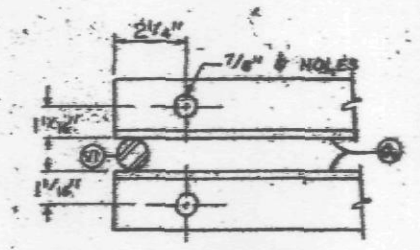

SECTION B-B

NO.	DATE	REVISION	BY
3	12-10-68	AS NOTED	G.D.C.
2	11-7-68	AS NOTED	G.D.C.
1	10-31-68	CP16	L.W.H.

(3) REF. DRWG.

7-ABI-15	10-4-68
7-ABI-54	10-25-68
7-ABI-52	7-22-68
7-AB2-2	1-8-68
7-AB3-24	8-15-68
7-AB6-17 & 17/2	10-4-68
8A-124	10-11-68
7-ABI-55	10-15-68

PAINT
LACLEDE ELECTROCOAT
RED NO. 10001

TRUSS DESIGNATION	TOP CHORD TWO ANGLES				BOTTOM CHORD TWO ANGLES				MAIN WEB "W"					FILLER		"M" C/C HOLES	CHORD PLATE (1)				CONNECTION FILLERS			CHANNEL PLATES					REINFORCING ANGLES				SPECIAL PLATES			
	MK.	TYPE STEEL	CHORD SIZE	LENGTH	MK.	TYPE STEEL	CHORD SIZE	LENGTH	MK.	TYPE STEEL	DIA.	LENGTH	NO. OF K	NO.	DIA.		MK.	TYPE STEEL	SIZE	LENGTH	NO	DIA	LENGTH	MK	TYPE STEEL	PCS.	SIZE	LENGTH	MK.	TYPE STEEL	ANGLE SIZE	(2 REQ'D) LENGTH	MK.	TYPE STEEL	SIZE	(2 REQ'D) LENGTH
C32T16AL-599	6	A242	2"x1 1/2"x.31	59'-9"	7	A36	3"x2"x.33"	47'-8"	3	A36	1.09	59'-6 1/4"	11 K @ 3'-4" = 36'-8"	11	1.09"	59'-3 3/4"	CP16	A36	3"x.25	41'-2"	4	1.09	3"	P8	A36	3	4 1/2"x39	5 1/2"	RA2	A36	3"x2"x.33"	7 1/2"	P12	A36	1"x3/8"	7 1/2"
									3A	A242	1.14	12'-5 1/2"	2 K @ 3'-4" = 6'-8"																							
									3B	A242	1.14	10'-7 5/8"	1 3/4K @ 3'-4" = 5'-9"																							

COLUMN END

Es END TRUSS DESIGNATION	BEARING ANGLES					WE	DOUBLE STRUT				CHORD PLATE				END STIFFENER MK. V8			MK. V9			MK. V10			CHANNEL			
	MK.	TYPE STEEL	CHORD SIZE	PCS.	LENGTH		MK.	TYPE STEEL	DIA.	LENGTH (2 REQ'D)	MK.	TYPE STEEL	SIZE	LENGTH	TYPE STEEL	DIA.	LENGTH	TYPE STEEL	DIA.	LENGTH	TYPE STEEL	DIA.	LENGTH	MK.	TYPE STEEL	CHANNEL SIZE	LENGTH
C32T16AL-599	9	A242	2"x1 1/2"x.25	2	9'-5"	5'-4 1/4"	DS	A242	1.14	2'-6 3/4"	—	—	—	—	A242	1.14	10 1/2"	A242	1.14	8'-3 7/8"	—	—	—	CHIL	A36	10C30	10'-0"
	9A	A242	2"x1 1/2"x.25	1	8 1/2"																			CHIR	A36	10C30	10'-2"

CHECK DIMENSION FOR TRUSS FAB.

LOCATION OF TRANS. TRUSS				
CL-1	CL-2	CL-3	CL-4	Fs
9'-6 1/2"	22'-10 1/2"	36'-2 1/2"	49'-6 1/2"	7'-4 1/2"

CORE END

EL END TRUSS DESIGNATION	BEARING ANGLES				WEv	DIAGONAL "Tv" STRUT				VERTICAL "STv" STRUT				END STIFFENER MK. V1			MK. V2			MK. V4			DOUBLE STRUT				DOUBLE STRUT			
	MK.	TYPE STEEL	CHORD SIZE	LENGTH		MK.	TYPE STEEL	DIA.	LENGTH	MK.	TYPE STEEL	DIA.	LENGTH	TYPE STEEL	DIA.	LENGTH	TYPE STEEL	DIA.	LENGTH	TYPE STEEL	DIA.	LENGTH	MK.	TYPE STEEL	DIA.	LENGTH	MK.	TYPE STEEL	DIA.	LENGTH
C32T16AL-599	9	A242	2"x1 1/2"x.25	1'-7"	5'-1 1/4"	10	A242	1.14	5'-8 1/2"	5	A242	1.14	2'-4 7/8"	A242	1.14	4 3/8"	—	—	—	A242	1.14	2'-2 1/2"	-	—	—	—	—	—	—	—

FABRICATION REQUIREMENTS

	DESIGN	TOLERANCE
CAMBER AT MIDSPAN	[illegible] 1/16"	± 3/8"
DESIGN DEPTH	29"	[illegible]
PANEL K	3'-4"	[illegible]
OVERALL LENGTH	59'-9"	± 3/32"
WEB DEPTH	31 7/8"	1/32"

FLOOR TRUSS DETAILS
FOR
WORLD TRADE CENTER - N.Y.C.
FOR
THE PORT OF NEW YORK AUTHORITY

FLOOR TRUSS C32T16AL (SEE NOTE 2) x 59'-9" LONG
WORLD TRADE CENTER TOWERS A & B

FABRICATION BY: LACLEDE STEEL COMPANY

FABRICATED AT MADISON, ILLINOIS		DESIGN DRAWING NO. 7-ABI-15	PLATE
APPROVED FOR FABRICATION BY: James White FOR P.O.N.Y.A.	DATE 12/16/68	DRAWN BY: gdc DATE OCT. 8, 1968	
APPROVED FOR FABRICATION BY: FOR FABRICATOR	DATE	CHECKED BY: T.M.CHUNG DATE OCT 9, 1968	IN CHARGE OF PROD. DEPT.
LACLEDE STEEL CO. DETAILED BY: SIGCAL [illegible]		FABRICATION CONT. NO. W.T.C. 221	SHEET NO. ST 216A

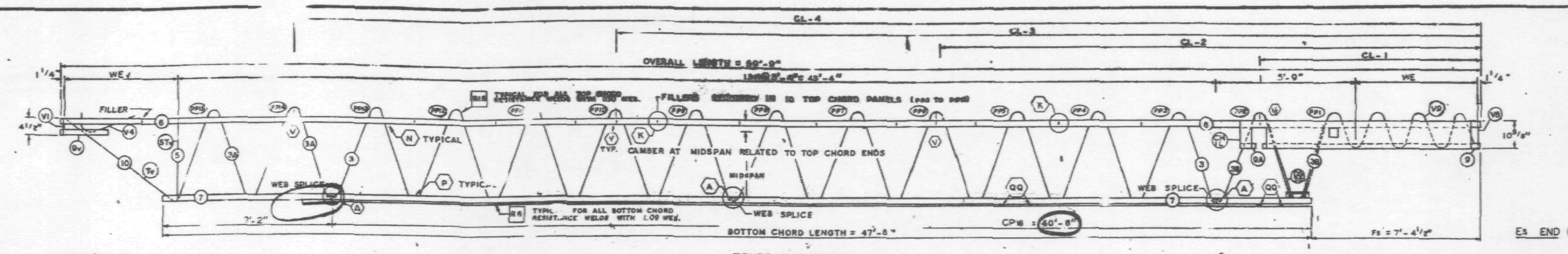

EL END (CORE)

TRUSS ELEVATION

Es END (COLUMN)

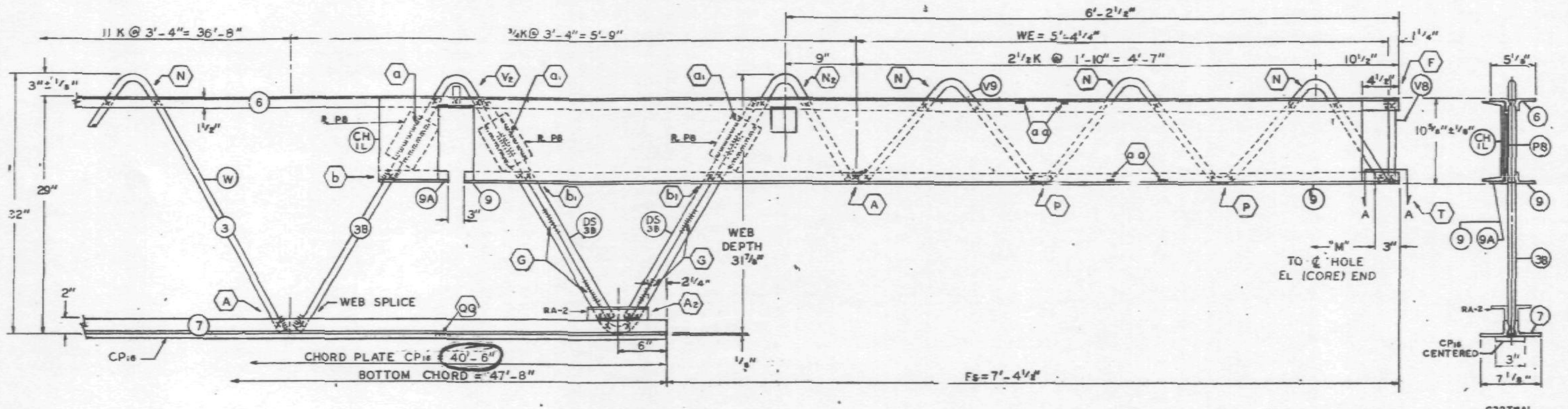

Es END (COLUMN)

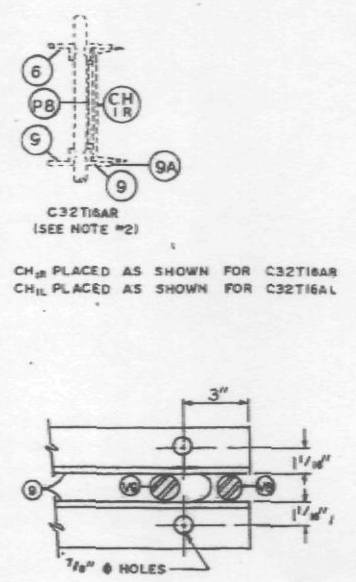

SECTION A-A

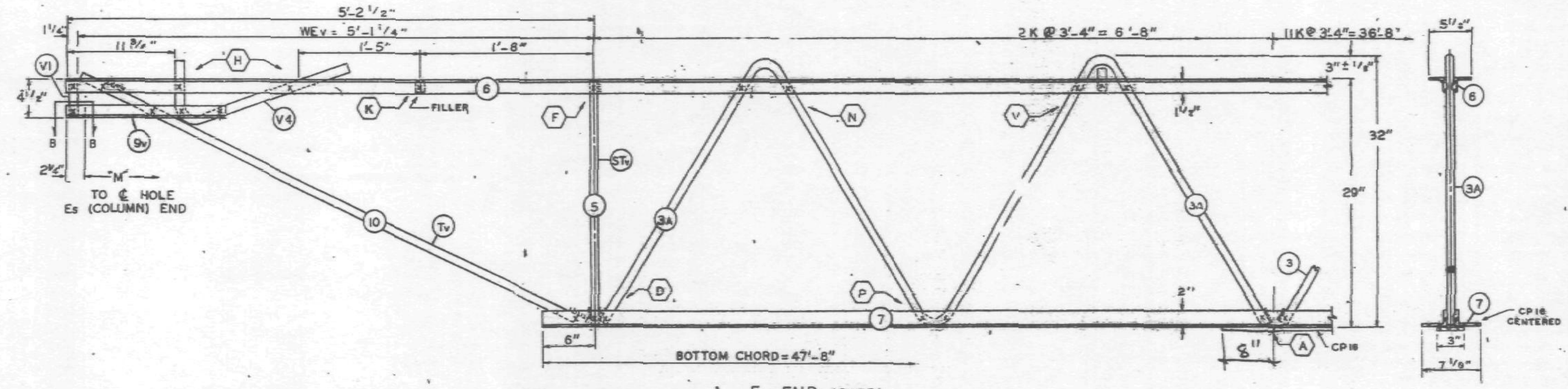

EL END (CORE)

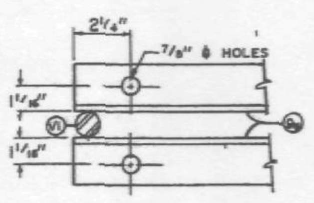

SECTION B-B

ALL PANEL POINTS RESISTANCE WELDED. (x).
ARC WELDS INDICATED AT SHADED AREAS
AND AT BOTTOM CHORD WEB SPLICES.
LETTERS IN HEXAGON INDICATE WELD DETAIL, ie., (A).
LETTERS AND NUMBERS IN SQUARES INDICATE
RESISTANCE WELD STRENGTH IDENTIFIED IN THE
QUALITY CONTROL PROGRAM, ie., [R9].
ALL WELD DETAILS SHOWN ON SHEETS ST290, ST291.

ALL CHANNEL DETAILS SHOWN ON SHEET ST 402.
CHORD PLATE DETAILS SHOWN ON SHEET ST 283.

NOTE 2

ALL DETAILS & ELEVATIONS SHOWN FOR C32T16AL TRUSSES ARE APPLICABLE TO C32T16AR TRUSSES WITH CHANNEL CH_{IR} AND BEARING ANGLE 9A PLACED ON OPP. HAND AS SHOWN.

FABRICATION REQUIREMENTS	DESIGN	TOLERANCE
CAMBER AT MIDSPAN	2 1/16"	± 3/8"
DESIGN DEPTH	29"	± 1/4"
PANEL K	3'-4"	± 1/4"
OVERALL LENGTH	59'-9"	± 3/8"
WEB DEPTH	31 7/8"	± 1/4"

NO.	DATE	REVISION	BY

REF. DRWG.

7-AB1-15	8-15-68
7-AB1-54	8-15-68
7-AB1-53 & 55	7-22-68
7-AB3-2	1-3-68
7-AB3-24	8-15-68
7-AB4-17 & 17.2	8-15-68
SA-124	8-1-68

CHRISTIANSEN ... Structural & Civil Engineer
APPROVED AS NOTED
Date 10/29/68 By SK

PAINT
LACLEDE ELECTROCOAT
RED NO. 10001

TRUSS DESIGNATION	TOP CHORD TWO ANGLES MK.	TYPE STEEL	CHORD SIZE	LENGTH	BOTTOM CHORD TWO ANGLES MK.	TYPE STEEL	CHORD SIZE	LENGTH	MAIN WEB "W" MK.	TYPE STEEL	DIA.	LENGTH	NO. OF K	FILLER NO.	DIA.	"M" C/C HOLES	CHORD PLATE MK.	TYPE STEEL	SIZE	LENGTH	CONNECTION FILLERS NO.	DIA.	LENGTH	CHANNEL PLATES MK.	TYPE STEEL	PCS.	SIZE	LENGTH	REINFORCING ANGLES (2 REQ'D) MK.	TYPE STEEL	SIZE	LENGTH	TRUSS DATA
C32T16AL-599	6	A242	2"x1 1/2"x.31	59'-9"	7	A36	3"x2"x.33"	47'-8"	3 3A 3B	A36 A242 A242	1.09 1.14 1.14	[illegible] [illegible] 10'-7 5/8"	11 K @ 3'-4" = 36'-8" 2 K @ 3'-4" = 6'-8" 1 3/4 K @ 3'-4" = 5'-9"	11	1.09"	59'-3 3/4"	CP16	A36	3"x 25	40'-6"	4	1.09	3"	PB	A36	3	4 1/2"x39	5 1/2"	RA-2	A36	3"x 2"x.33	7 1/2"	

COLUMN END

Es END TRUSS DESIGNATION	BEARING ANGLES MK.	TYPE STEEL	CHORD SIZE	PCS.	LENGTH	WE	DOUBLE STRUT MK.	TYPE STEEL	DIA.	LENGTH (2 REQ'D)	CHORD PLATE MK.	TYPE STEEL	SIZE	LENGTH	END STIFFENER MK. V8 TYPE STEEL	DIA.	LENGTH	MK. V9 TYPE STEEL	DIA.	LENGTH	MK. V10 TYPE STEEL	DIA.	LENGTH	CHANNEL MK.	TYPE STEEL	CHANNEL SIZE	LENGTH
C32T16AL-599	9 9A	A242 A242	2"x1 1/2"x.25" 2"x1 1/2"x.25"	2 1	9'-5" 8 1/2"	5'-4 1/4	DS	A242	1.14	2'-6 3/4"	—	—	—	—	A242	1.14	10 1/2"	A242	1.14	8'-3 7/8"	—	—	—	CH1L CH1R	A36 A36	10 C 30 10 C 30	10'-0" 10'-0"

CHECK DIMENSION FOR TRUSS FAB.

LOCATION OF TRANS. TRUSS				
CL-1	CL-2	CL-3	CL-4	Fs
9'-6 1/2"	22'-10 1/2"	36'-2 1/2"	49'-6 1/2"	7'-4 1/2"

CORE END

EL END TRUSS DESIGNATION	BEARING ANGLES MK.	TYPE STEEL	CHORD SIZE	LENGTH	WEv	DIAGONAL "Tv" STRUT MK.	TYPE STEEL	DIA.	LENGTH	VERTICAL "STv" STRUT MK.	TYPE STEEL	DIA.	LENGTH	END STIFFENER MK. V1 TYPE STEEL	DIA.	LENGTH	MK. V2 TYPE STEEL	DIA.	LENGTH	MK. V4 TYPE STEEL	DIA.	LENGTH	DOUBLE STRUT MK.	TYPE STEEL	DIA.	LENGTH	DOUBLE STRUT MK.	TYPE STEEL	DIA.	LENGTH
C32T16AL-599	9v	A242	2"x1 1/2"x.25	1'-7"	5'-1 1/4"	10	A242	1.14	5'-6 1/2"	5	A242	1.14	2'-4 3/4"	A242	1.14	4 3/8"	—	—	—	A242	1.14	2'-2 1/2"	-	—	—	—	—	—	—	—

FLOOR TRUSS DETAILS
FOR
WORLD TRADE CENTER - N.Y.C.
FOR
THE PORT OF NEW YORK AUTHORITY

FLOOR TRUSS C32T16AL (SEE NOTE 2) x 59'-9" LONG
WORLD TRADE CENTER TOWERS A & B

FABRICATION BY: LACLEDE STEEL COMPANY

FABRICATED AT MADISON, ILLINOIS		DESIGN DRAWING NO. 7-AB1-15	PLATE
APPROVED FOR FABRICATION BY: FOR P.O.N.Y.A.	DATE	DRAWN BY: gdc DATE OCT. 8, 1968	
APPROVED FOR FABRICATION BY: FOR FABRICATOR	DATE	CHECKED BY: T.M. CHURA DATE OCT. 9, 1968	IN CHARGE OF PROD. DEV.
DETAILED BY: A. CARL WEBER		FABRICATION CONT. NO. W.T.C. 221	SHEET NO. ST 216AL

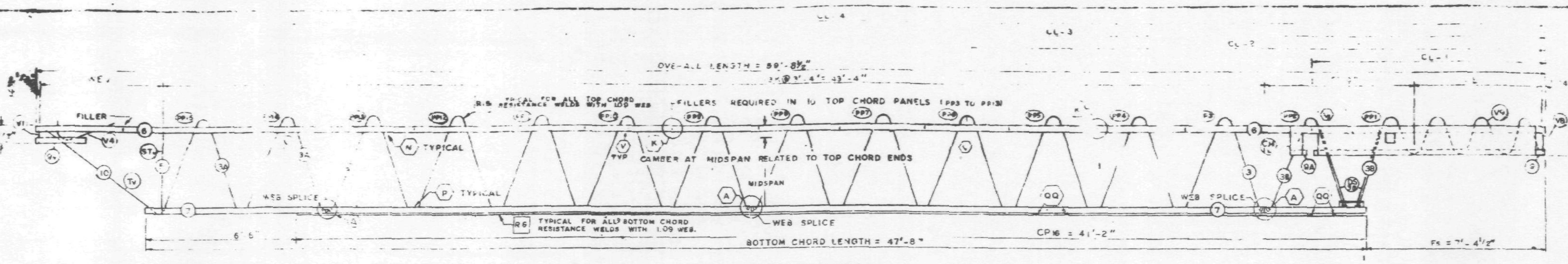

TRUSS ELEVATION

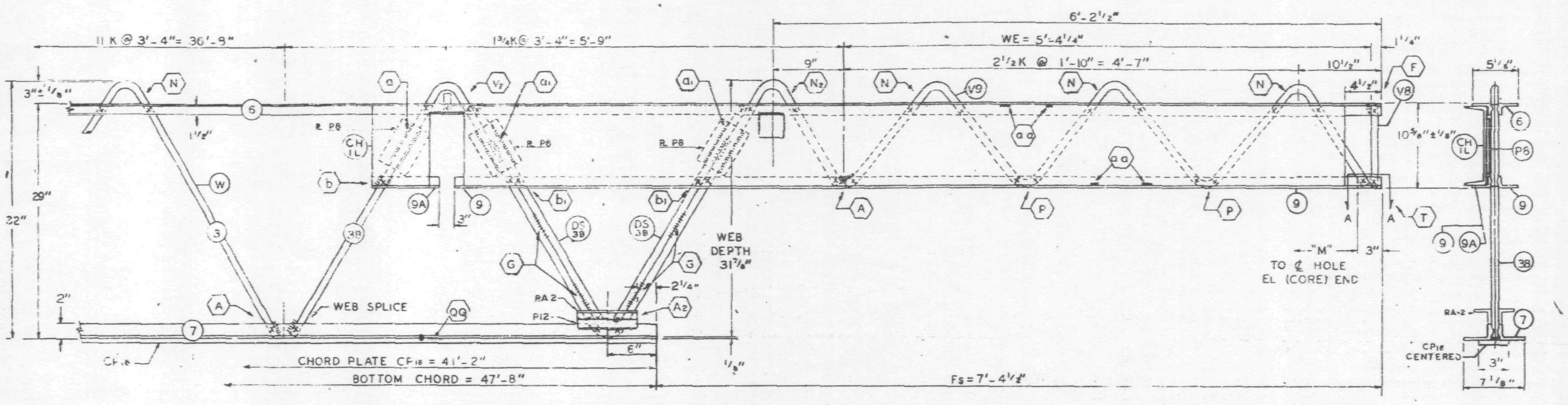

Es END (COLUMN)

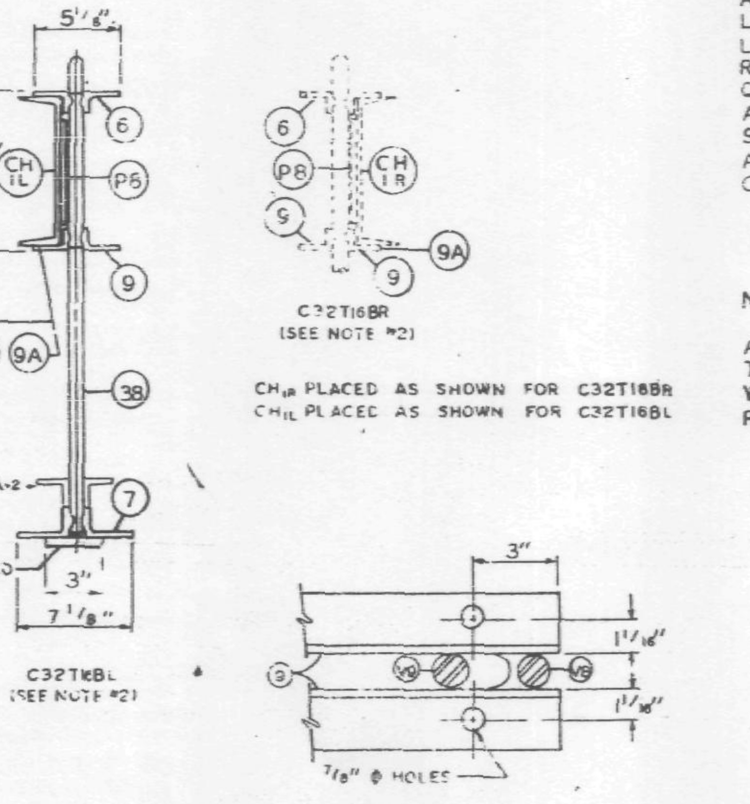

SECTION A-A

ALL PANEL POINTS RESISTANCE WELDED. (X).
ARC WELDS INDICATED AT SHADED AREAS
AND AT BOTTOM CHORD WEB SPLICES.
LETTERS IN HEXAGON INDICATE WELD DETAIL, ie., (A).
LETTERS AND NUMBERS IN SQUARES INDICATE RESISTANCE WELD STRENGTH IDENTIFIED IN THE QUALITY CONTROL PROGRAM, ie., [R9].
ALL WELD DETAILS SHOWN ON SHEETS ST290, ST291, ST 292 & ST 293
ALL CHANNEL DETAILS SHOWN ON SHEET ST 407.
CHORD PLATE DETAILS SHOWN ON SHEET ST 283.

NOTE 2

ALL DETAILS & ELEVATIONS SHOWN FOR C32T16BL TRUSSES ARE APPLICABLE TO C32T16BR TRUSSES WITH CHANNEL CH1R AND BEARING ANGLE 9A PLACED ON OPP. HAND AS SHOWN.

FABRICATION REQUIREMENTS

	DESIGN	TOLERANCE
CAMBER AT MIDSPAN	2 /16"	± 3/8"
DESIGN DEPTH	29"	± 1/4"
PANEL K	3'-4"	± 1/4"
OVERALL LENGTH	59'-8½"	± 3/8"
WEB DEPTH	31 7/8"	± 1/4"

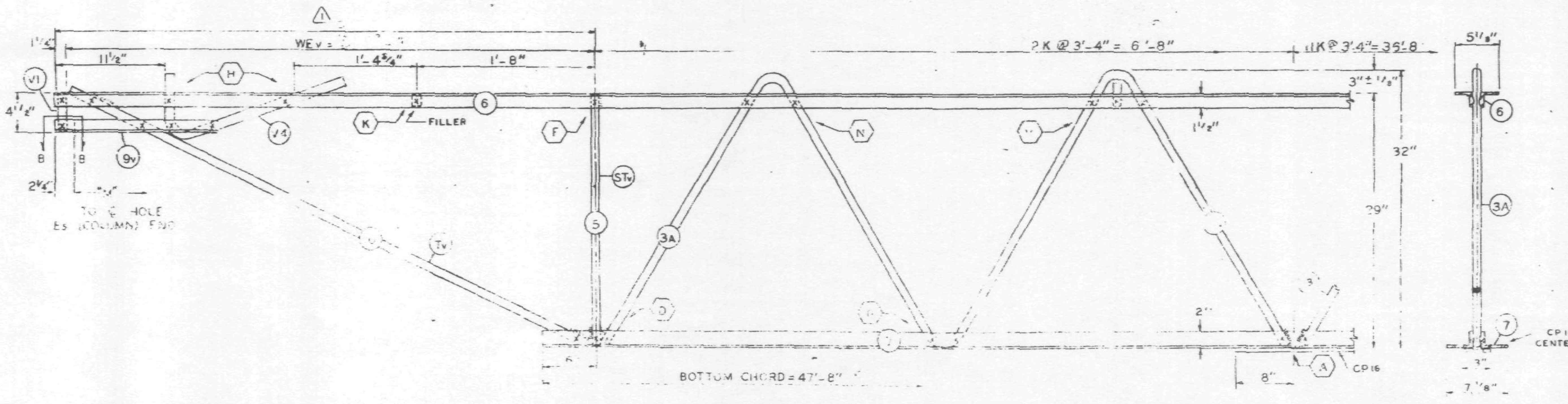

EL END (CORE)

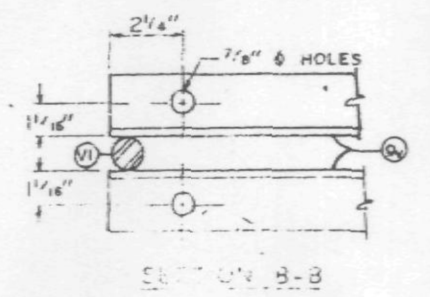

SECTION B-B

NO.	DATE	REVISION	BY
1	5-6-69	AS NOTED	D.C.C.

REF DRWG.

7-AB1-15	10-4-68
7-AB1-54	1-6-69
7-AB1-53	7-22-68
7-AB3-2	1-3-68
7-AB3-24	8-15-68
7-AB1-17	10-4-68
5A-24	1-6-69
7-AB1-55	10-15-68
7-AB4-17.2	12-20-68

PAINT
LACLEDE ELECTROCOAT
RED NO. 10001

TRUSS DESIGNATION				BOTTOM CHORD TWO ANGLES TYPE STEEL	CHORD SIZE	LENGTH	MAIN WEB "W" MK	TYPE STEEL	DIA	LENGTH	NO. OF K		FILLER	"M" HOLES	MK	CHORD PLATE TYPE STEEL	SIZE	LENGTH	CONNECTION FILLERS NO.	DIA	LENGTH	CHANNEL PLATES MK	TYPE STEEL	PCS.	SIZE	LENGTH	REINFORCING ANGLES MK	TYPE STEEL	ANGLE SIZE	2 REQ'D LENGTH	SPECIAL PLATES MK	TYPE STEEL	SIZE	2 REQ'D LENGTH
C32T16BL 598.5	A242		59'-8½"	A36	3" x 2" x .33"	47'-8"	3 / 3A / 3B	A36 / A242 / A242	1.09 / 1.14 / 1.14	68'-6 1/4" / 12'-5 / 10'-7.5 8"	11 K / 2 K / 3/4 K	3'-4" = 36'-8" / 3'-4" = 6'-8" / 3'-4" = 5'-9"	11	1.09"	3¼"	CP16	A36	3"x .25	41'-2"	4	1.09	3"	P6	A36	3	4'2"x39	5"	9A / 2	A36	3" x 2" x .33"	7½"	P12	A36	1"x3/8"	7½"

ES END	TRUSS DESIGNATION	SEAT ANGLE TYPE STEEL	CHORD SIZE		WE	MK	DOUBLE STRUT TYPE STEEL	DIA	LENGTH 2 REQ'D	CHORD PLATE MK	TYPE STEEL	SIZE	LENGTH	END STIFFENER MK. V8 TYPE STEEL	DIA	LENGTH	MK. V9 TYPE STEEL	DIA	LENGTH	MK. V10 TYPE STEEL	DIA	LENGTH	CHANNEL MK	TYPE STEEL	CHANNEL SIZE	LENGTH
	C32T16BL 598.5	A242			4'-5¼"		A242	1.4	2'-6¾"	—	—	—	—	A242	1.14	10½"	A242	1.14	5'-5⅞"	—	—	—	CH1R / CH1L	A36 / A36	10 [30 / 10 [30	10'-0" / 10'-0"

CHECK DIMENSION FOR TRUSS FAB
LOCATION OF TRANS. TRUSS

CL-1	CL-2	CL-3	CL-4
9'-6½"	2'-10½"	36'-2½"	4'-8½"

CORE END EL END	TRUSS DESIGNATION	SEAT ANGLE TYPE STEEL	CHORD SIZE	LENGTH	WE ⚠1	MK	DIAGONAL STRUT TYPE STEEL	DIA	LENGTH	MK	VERTICAL ST. STRUT TYPE STEEL	DIA	LENGTH	END STIFFENER MK. V1 TYPE STEEL	DIA	LENGTH	MK. V2 TYPE STEEL	DIA	LENGTH	MK. V4 TYPE STEEL	DIA	LENGTH	MK	DOUBLE STRUT TYPE STEEL	DIA	LENGTH	MK	DOUBLE STRUT TYPE STEEL	DIA	LENGTH
	C32T16B 598.5	A242		1'-6"		10	A242	1.14	5'-6⅛"	5	A242	1.14	2'-4⅞"	A242	1.14	4'-8"	—	—	—	A242	1.14	2'-2"	—	—	—	—	—	—	—	—

FLOOR TRUSS DETAILS
FOR
WORLD TRADE CENTER – N.Y.C.
FOR
THE PORT OF NEW YORK AUTHORITY

FLOOR TRUSS C32T16BL (SEE NOTE 2) x 59'-8½" LONG
WORLD TRADE CENTER TOWERS A & B

FABRICATION BY LACLEDE STEEL COMPANY
FABRICATED AT MADISON, ILLINOIS
DESIGN DRAWING NO. 7-AB1-5 [redacted]
APPROVED FOR FABRICATION BY [signature] FOR P.O.N.Y.A. DATE 6/4/69
DRAWN BY: [redacted]
DATE APRIL [redacted]
APPROVED FOR FABRICATION BY FOR FABRICATOR DATE
CHECKED BY [redacted]
DATE APRIL [redacted]
DETAILED BY CARL WEBER
LACLEDE STEEL CO.
FABRICATION W.T.C. 2 [redacted]

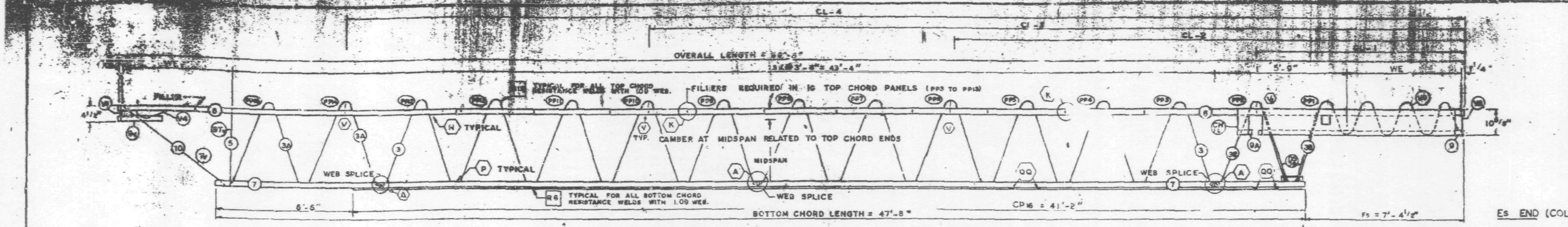

EL END (CORE)

TRUSS ELEVATION

Es END (COLUMN)

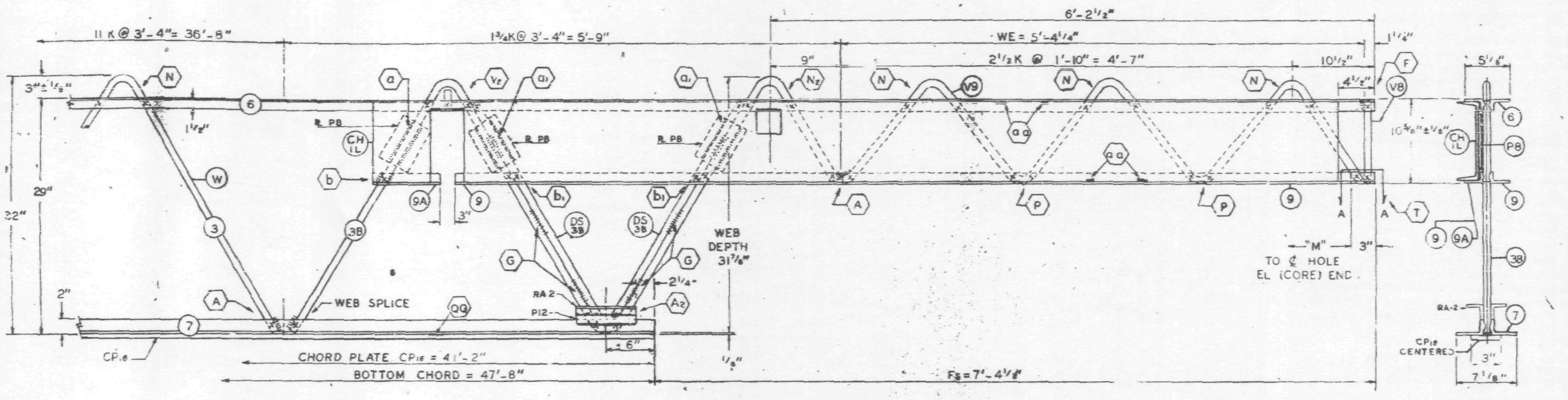

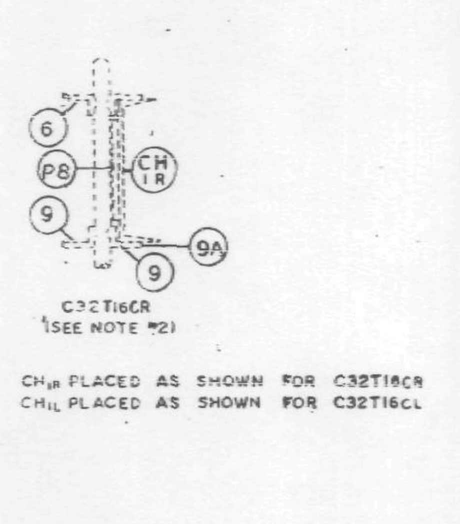

Es END (COLUMN)

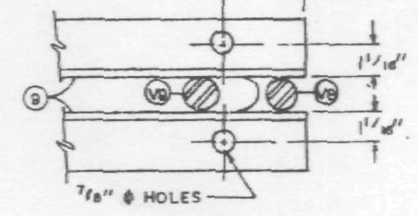

SECTION A-A

ALL PANEL POINTS RESISTANCE WELDED. (X).
ARC WELDS INDICATED AT SHADED AREAS AND AT BOTTOM CHORD WEB SPLICES. [illegible]
LETTERS IN HEXAGON INDICATE WELD DETAIL, ie., (A).
LETTERS AND NUMBERS IN SQUARES INDICATE RESISTANCE WELD STRENGTH IDENTIFIED IN THE QUALITY CONTROL PROGRAM, ie., [R9].
ALL WELD DETAILS SHOWN ON SHEETS ST290, ST291, ST292 & ST293.
ALL CHANNEL DETAILS SHOWN ON SHEET ST407.
CHORD PLATE DETAILS SHOWN ON SHEET ST 283.

NOTE 2

ALL DETAILS & ELEVATIONS SHOWN FOR C32T16CL TRUSSES ARE APPLICABLE TO C32T16CR TRUSSES WITH CHANNEL CH1R AND BEARING ANGLE 9A PLACED ON OPP. HAND AS SHOWN.

FABRICATION REQUIREMENTS

	DESIGN	TOLERANCE
CAMBER AT MIDSPAN	2 1/16"	± [illegible]
DESIGN DEPTH	29"	± 1/8"
PANEL K	3'-4"	± 1/4"
OVERALL LENGTH	59'-8"	± 3/16"
WEB DEPTH	31 7/8"	± 1/4"

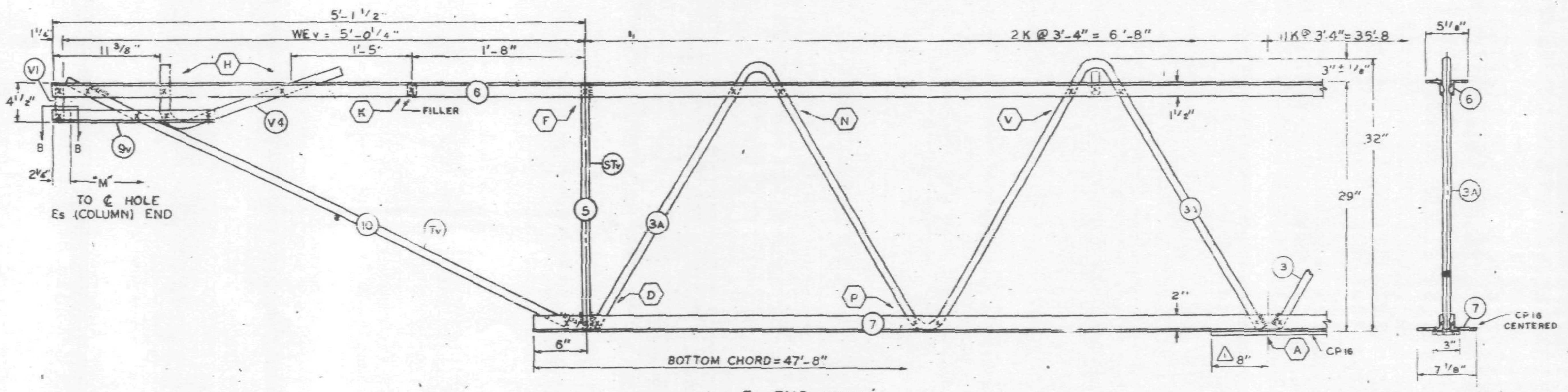

EL END (CORE)

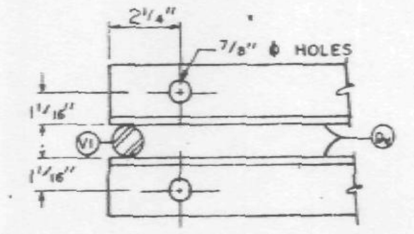

SECTION B-B

NO.	DATE	REVISION	BY

REF. DRWG.

7-AB1-15	10-4-68
7-AB1-54	11-25-68
7-AB1-53	7-22-68
7-AB3-2	1-3-68
7-AB3-24	8-15-68
7-AB4 17 & 17.2	10-4-68
SA-124	10-11-68
7-AB1-55	10-15-68

PAINT
LACLEDE ELECTROCOAT
RED NO. 10001

TRUSS DESIGNATION	TOP CHORD TWO ANGLES				BOTTOM CHORD TWO ANGLES				MAIN WEB "W"					FILLER		"M" C/C HOLES	CHORD PLATE				CONNECTION FILLERS			CHANNEL PLATES					REINFORCING ANGLES				SPECIAL PLATES			
	MK.	TYPE STEEL	CHORD SIZE	LENGTH	MK.	TYPE STEEL	CHORD SIZE	LENGTH	MK.	TYPE STEEL	DIA.	LENGTH	NO. OF K	NO.	DIA.		MK.	TYPE STEEL	SIZE	LENGTH	NO.	DIA.	LENGTH	MK.	TYPE STEEL	PCS.	SIZE	LENGTH	MK.	TYPE STEEL	ANGLE SIZE	(2 REQ'D) LENGTH	MK.	TYPE STEEL	SIZE	(2 REQ'D) LENGTH
C32T16CL-598	6	A242	[illegible]1/2" x .31	59'-8"	7	A36	3" x 2" x .33"	47'-8"	3 3A 3B	A36 A242 A242	1.09 1.14 1.14	58'-8 1/4" 12'-5 1/2" 10'-7 5/8"	11 K @ 3'-4" = 36'-8" 2 K @ 3'-4" = 6'-8" 1 3/4 K @ 3'-4" = 5'-9"	11	1.09"	59'-2 3/4"	CP16	A36	3" x 25	41'-2"	4	1.09	3"	P8	A36	3	4 1/2" x 39	5 1/2"	RA-2	A36	3" x 2" x .33"	7 1/2"	P12	A36	1" x 3/8"	7 1/2"

Es COLUMN END	TRUSS DESIGNATION	BEARING ANGLES					WE	DOUBLE STRUT				CHORD PLATE				END STIFFENER MK. V8			MK. V9			MK. V10			CHANNEL			
		MK.	TYPE STEEL	CHORD SIZE	PCS.	LENGTH		MK.	TYPE STEEL	DIA.	LENGTH (2 REQ'D)	MK.	TYPE STEEL	SIZE	LENGTH	TYPE STEEL	DIA.	LENGTH	TYPE STEEL	DIA.	LENGTH	TYPE STEEL	DIA.	LENGTH	MK.	TYPE STEEL	CHANNEL SIZE	LENGTH
	C32T16CL-598	9 9A	A242 A242	2" x 1 1/2" x .25 2" x 1 1/2" x .25	2 1	9'-5" 8 1/2"	5'-4 1/4"	DS 3B	A242	1.14	2'-8 3/4"	—	—	—	—	A242	1.14	10 1/2"	A242	1.14	8'-3 7/8"	—	—	—	CH1L CH1R	A36 A36	10 C 30 10 C 30	10'-0" 10'-0"

CHECK DIMENSION FOR TRUSS FAB.

LOCATION OF TRANS. TRUSS				
CL-1	CL-2	CL-3	CL-4	F
9'-6 1/2"	22'-10 1/2"	35'-2 1/2"	49'-6 1/2"	[illegible]

CORE END EL END	TRUSS DESIGNATION	BEARING ANGLES				WEv	DIAGONAL "Tv" STRUT				VERTICAL "STv" STRUT				END STIFFENER MK. V1			MK. V2			MK. V4			DOUBLE STRUT				DOUBLE STRUT			
		MK.	TYPE STEEL	CHORD SIZE	LENGTH		MK.	TYPE STEEL	DIA.	LENGTH	MK.	TYPE STEEL	DIA.	LENGTH	TYPE STEEL	DIA.	LENGTH	TYPE STEEL	DIA.	LENGTH	TYPE STEEL	DIA.	LENGTH	MK.	TYPE STEEL	DIA.	LENGTH	MK.	TYPE STEEL	DIA.	LENGTH
	C32T16CL-598	9V	A242	2" x 1 1/2" x .25	1'-6"	5'-0 1/4"	10	A242	1.14	9'-5 1/2"	5	A242	1.14	2'-4 7/8"	A242	1.14	4 5/8"	—	—	—	A242	1.14	2'-2 1/2"	-	—	—	—		—	—	—

FLOOR TRUSS DETAILS
FOR
WORLD TRADE CENTER - N.Y.C.
FOR
THE PORT OF NEW YORK AUTHORITY

FLOOR TRUSS C32T16CL (SEE NOTE 2) x 59'-8" LONG
WORLD TRADE CENTER TOWERS A & B

FABRICATION BY: LACLEDE STEEL COMPANY

FABRICATED AT MADISON, ILLINOIS		DESIGN DRAWING NO. 7-AB1-15	PLATE
APPROVED FOR FABRICATION BY: James White FOR P.O.N.Y.A.	DATE 4/7/69	DRAWN BY: [illegible] DATE MAR. 28, 1969	
APPROVED FOR FABRICATION BY ___ FOR FABRICATOR	DATE	CHECKED BY: T.M. OSURA DATE MAR. 28, 1969	IN CHARGE OF PROD. DEV.
DETAILED BY: A CARL WEBER		FABRICATION CONT. NO. W.T.C. 221	SHEET NO. ST 216 CL

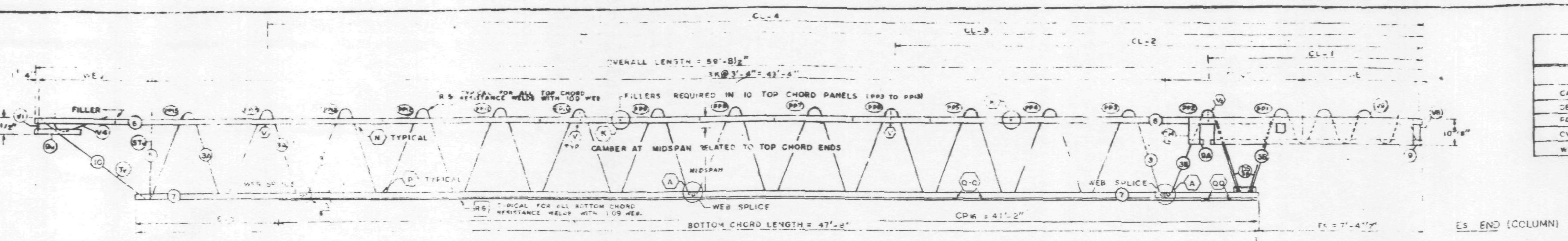

EL END (CORE)

TRUSS ELEVATION

ES END (COLUMN)

FABRICATION REQUIREMENTS		
	DESIGN	TOLERANCE
CAMBER AT MIDSPAN	2"	± 3/8"
DESIGN DEPTH	29"	± 1/4"
PANEL K	9'-4"	± 1/4"
OVERALL LENGTH	59' 8½"	± 3/8"
WEB DEPTH	31 7/8"	± 1/4"

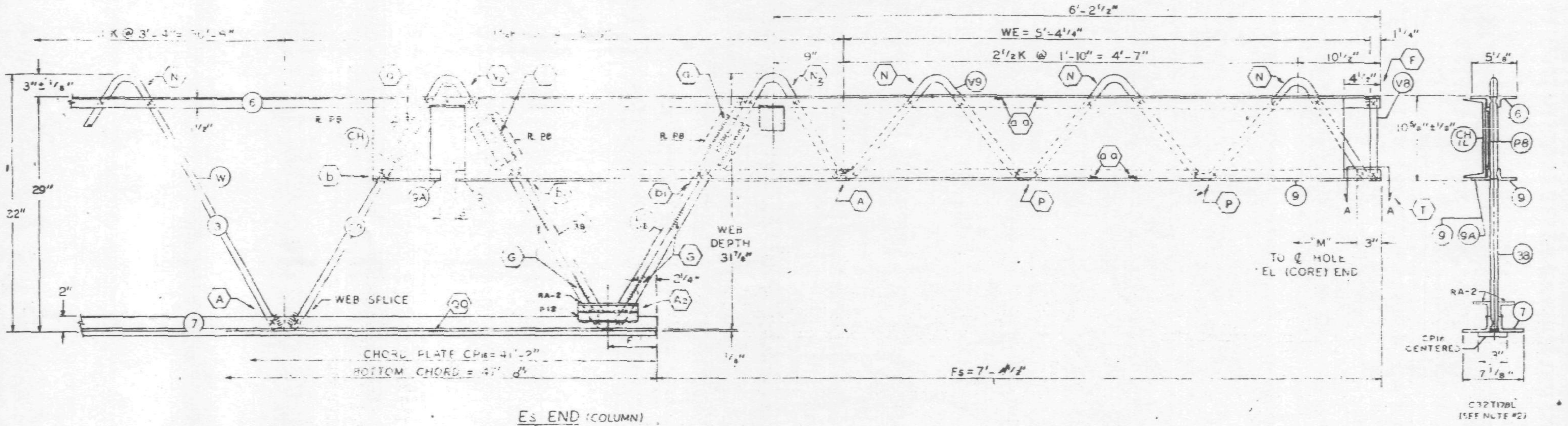

ES END (COLUMN)

ALL PANEL POINTS RESISTANCE WELDED. (*).
ARC WELDS INDICATED AT SHADED AREAS AND AT BOTTOM CHORD WEB SPLICES.
LETTERS IN HEXAGON INDICATE WELD DETAIL, ie., (A).
LETTERS AND NUMBERS IN SQUARES INDICATE RESISTANCE WELD STRENGTH IDENTIFIED IN THE QUALITY CONTROL PROGRAM, ie., R9.
ALL WELD DETAILS SHOWN ON SHEETS ST290, ST291, ST292 & ST293.
ALL CHANNEL DETAILS SHOWN ON SHEET ST407.
CHORD PLATE DETAILS SHOWN ON SHEET ST283.

NOTE 2

ALL DETAILS & ELEVATIONS SHOWN FOR C32T17BL TRUSSES ARE APPLICABLE TO C32T17BR TRUSSES WITH CHANNEL CHIR AND BEARING ANGLE 9A PLACED ON OPP. HAND AS SHOWN.

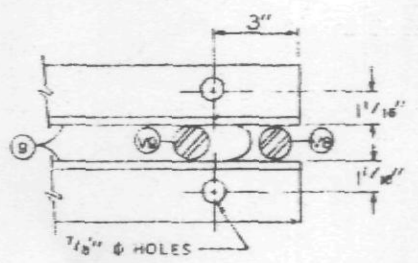

SECTION A-A

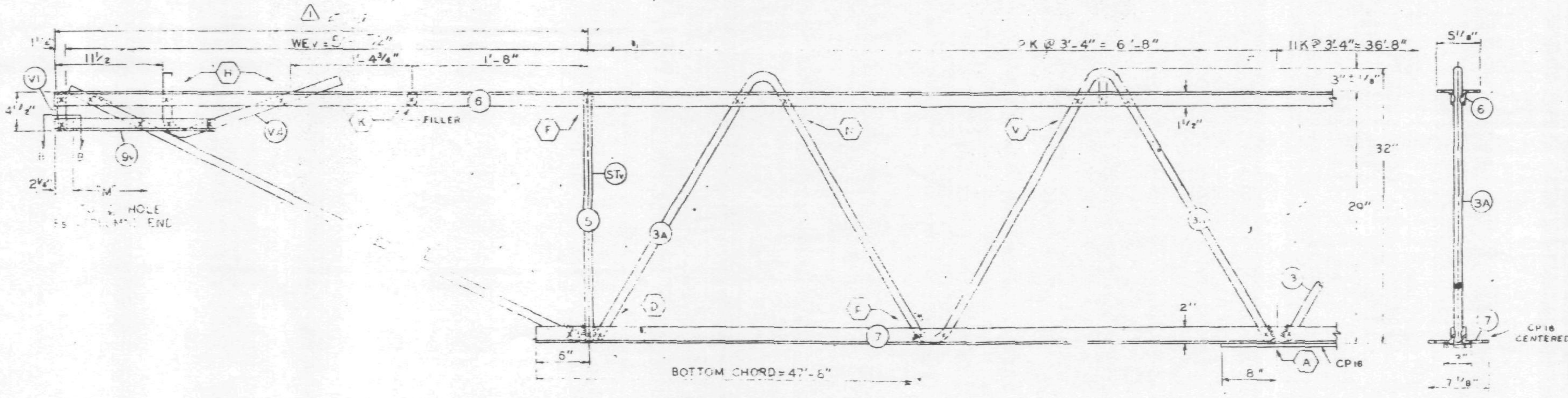

EL END (CORE)

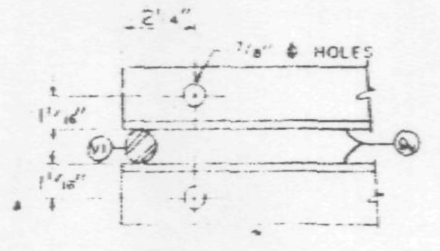

SECTION B-B

NO	DATE	REVISION	BY
1	5-6-69	AS NOTED	D.C.C.

REF. DRWG.	
7-AB1-18	10-4-68
7-AB1-54	1-6-69
7-AB1-53	7-22-68
7-AB3-2	1-3-68
7-AB3-24	8-15-68
7-AB4-[illegible]	10-4-68
SA-124	1-6-69
7-AB1-55	10-15-68
7-AB4-17.2	12-20-68

PAINT
LACLEDE ELECTROCOAT
RED NO. 10001

TRUSS DESIGNATION	TOP CHORD TWO ANGLES			BOTTOM CHORD TWO ANGLES			MAIN WEB					FILLER		"M" C/C HOLES	CHORD PLATE				CONNECTION FILLERS			CHANNEL PLATES					REINFORCING ANGLES				SPECIAL PLATES			
	TYPE STEEL	CHORD SIZE	LENGTH	TYPE STEEL	CHORD SIZE	LENGTH	MK	TYPE STEEL	DIA	LENGTH	NO. OF K	NO.	DIA.		MK	TYPE STEEL	SIZE	LENGTH	NO	DIA	LENGTH	MK	TYPE STEEL	PCS.	SIZE	LENGTH	MK	TYPE STEEL	ANGLE SIZE	(2 REQ'D) LENGTH	MK	TYPE STEEL	SIZE	(2 REQ'D) LENGTH
C32T17BL 598.5	A242	2"[illegible]	59'-8½"	A36	3"x2"x.33"	47'-8"	3 / 3A / 3B	A36 / A242 / A242	.09 / .14 / .19	68'-8 1/4" / 12'-5 1/2" / 10'-7 5/8"	11 K@3'-4"=36'-8" / 2 K@3'-4"=6'-8" / 3.4K@3'-4"=5'-9"	1	1.09"	59'-3¼"	CP16	A36	3"x.25	4'-2"	4	1.09	3"	CP	A36	3	4½"x.39	5'-2"	RA2	A36	3"x2"x.33"	7'-2"	P12	A36	1"x3/8"	7'-2"

COLUMN END	TRUSS DESIGNATION	BEARING ANGLES					WE	DOUBLE STRUT				CHORD PLATE				END STIFFENER MK. V8			END STIFFENER MK. V9			END STIFFENER MK. V10			CHANNEL			
		MK	TYPE STEEL	CHORD SIZE	PCS.	LENGTH		MK	TYPE STEEL	DIA	LENGTH (2 REQ'D)	MK	TYPE STEEL	SIZE	LENGTH	TYPE STEEL	DIA.	LENGTH	TYPE STEEL	DIA	LENGTH	TYPE STEEL	DIA.	LENGTH	MK.	TYPE STEEL	CHANNEL SIZE	LENGTH
END	[illegible]7BL 598.5	9 / 9A	A242 / A242	[illegible]	1	9'-5" / 8 1/2"	5'-4¼"	DS	A242	114	2-6¾"	-	-	-	-	A242	114	10½"	A242	114	8'-3⅞"	—	—	—	CHIL / CHIR	A36 / A36	10C 30 / 10C 30	10'-0" / 10'-0"

CORE END	TRUSS DESIGNATION	BEARING ANGLES				WE	DIAGONAL "V1" STRUT				VERTICAL ST STRUT				END STIFFENER MK. V1			END STIFFENER MK. V2			END STIFFENER MK. V4			DOUBLE STRUT				DOUBLE STRUT			
		MK	TYPE STEEL	CHORD SIZE	LENGTH		MK	TYPE STEEL	DIA	LENGTH	MK	TYPE STEEL	DIA	LENGTH	TYPE STEEL	DIA.	LENGTH	TYPE STEEL	DIA.	LENGTH	TYPE STEEL	DIA	LENGTH	MK.	TYPE STEEL	DIA.	LENGTH	MK.	TYPE STEEL	DIA.	LENGTH
END	C32T17BL 598.5	9A	A242	2"x1"x.25"	6"		V1	A242	114	5'-6⅛"	ST	A242	114	2'-4"	A242	114	4'-8"	--	—	—	A242	114	2'-2½"	-	—	—	—		—	—	—

CHECK DIMENSION FOR TRUSS FAB.

LOCATION OF TRANS. TRUSS				
CL-1	CL-2	CL-3	CL-4	FS
9'-6'	22'-10½"	36'-2½"	49'-6½"	[illegible]4½"

FLOOR TRUSS DETAILS
FOR
WORLD TRADE CENTER - N.Y.C.
FOR
THE PORT OF NEW YORK AUTHORITY

FLOOR TRUSS C32T17BL (SEE NOTE 2) x 59'-8½"
WORLD TRADE CENTER TOWERS A & B

FABRICATION BY LACLEDE STEEL COMPANY
FABRICATED AT MADISON, ILLINOIS
APPROVED FOR FABRICATION FOR P.O.N.Y.A. James White DATE 6/4/69
APPROVED FOR FABRICATION BY ____ FOR FABRICATOR DATE ____
DETAILED BY: A. CARL WEBER

DESIGN DRAWING NO. 7-AB1-16
DRAWN BY: gdc DATE APRIL 11, 1969
CHECKED BY: T.M.CH[redacted]
DATE APRIL 11, 1969
FABRICATION CONT. NO. WTC 221

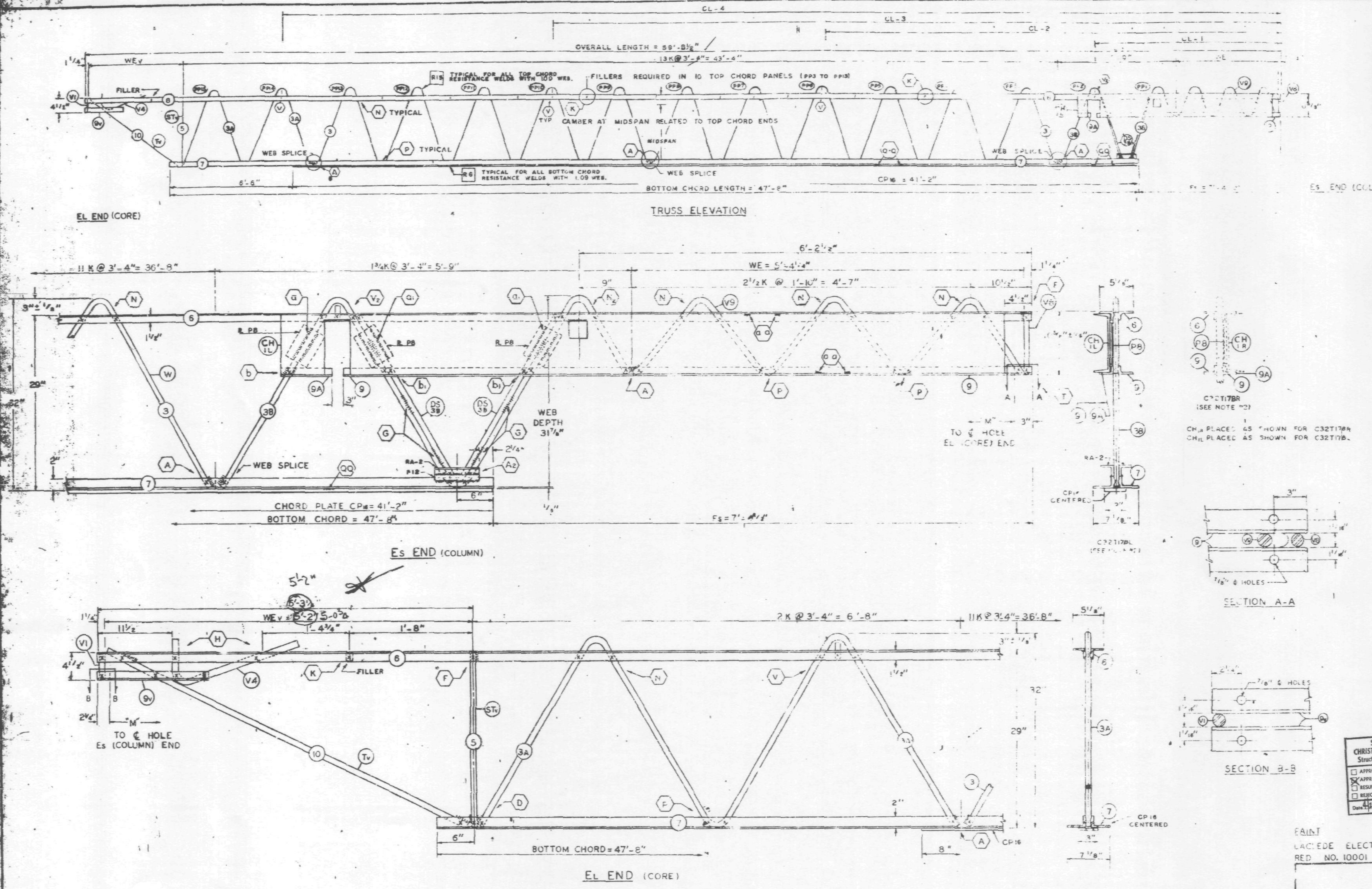

FABRICATION REQUIREMENTS

	DESIGN	TOLERANCE
CAMBER AT MIDSPAN	2"	± 3/8"
DESIGN DEPTH	29"	± 1/4"
PANEL K	3'-4"	± 1/4"
OVERALL LENGTH	59' 8 1/2"	± 3/8"
WEB DEPTH	31 7/8"	± 1/4"

ALL PANEL POINTS RESISTANCE WELDED. (x).
ARC WELDS INDICATED AT SHADED AREAS AND AT BOTTOM CHORD WEB SPLICES.
LETTERS IN HEXAGON INDICATE WELD DETAIL, ie.. (A).
LETTERS AND NUMBERS IN SQUARES INDICATE RESISTANCE WELD STRENGTH IDENTIFIED IN THE QUALITY CONTROL PROGRAM, ie.. [R9].
ALL WELD DETAILS SHOWN ON SHEETS ST290, ST291, ST292 & ST 293.
ALL CHANNEL DETAILS SHOWN ON SHEET ST 407.
CHORD PLATE DETAILS SHOWN ON SHEET ST 283.

NOTE 2

ALL DETAILS & ELEVATIONS SHOWN FOR C32T17BL TRUSSES ARE APPLICABLE TO C32T17BR TRUSSES WITH CHANNEL CH R AND BEARING ANGLE 9A PLACED ON OPP. HAND AS SHOWN.

NO	DATE	REVISION	BY

SKILLING - HELLE CHRISTIANSEN - ROBERTSON
Structural & Civil Engineers
☐ APPROVED
☒ APPROVED AS NOTED
☐ RESUBMIT
☐ REJECTED
Date 4/25/69 By SK

REF. DRWG.

7-AB1-18	10-4-68
7-AB1-54	1-6-69
7-AB1-53	7-22-68
7-AB3-2	1-3-68
7-AB3-24	8-15-68
7-AB4-17	10-4-68
SA-124	1-6-69
7-AB1-55	10-15-68
7-AB4-17.2	12-20-68

PAINT
LACLEDE ELECTROCOAT
RED NO. 10001

TRUSS DESIGNATION	TOP CHORD TWO ANGLES				BOTTOM CHORD TWO ANGLES				MAIN WEB "W"					FILLER		"M" C/C HOLES	CHORD PLATE				CONNECTION FILLERS			CHANNEL PLATES					REINFORCING ANGLES				SPECIAL PLATES			
	MK.	TYPE STEEL	CHORD SIZE	LENGTH	MK.	TYPE STEEL	CHORD SIZE	LENGTH	MK.	TYPE STEEL	DIA.	LENGTH	NO. OF K	NO.	DIA.		MK.	TYPE STEEL	SIZE	LENGTH	NO	DIA	LENGTH	MK	TYPE STEEL	PCS.	SIZE	LENGTH	MK.	TYPE STEEL	ANGLE SIZE	(2 REQ'D) LENGTH	MK.	TYPE STEEL	SIZE	(2 REQ'D) LENGTH
C32T17BL-598.5	6	A242	2"x1 1/2"x.31	59'-8 1/2"	7	A36	3" x 2" x .33"	47'-8"	3 3A 3B	A36 A242 A242	1.09 1.14 1.14	6?'-6 1/4" 12'-5 1/2" 10'-7 5/8"	11 K @ 3'-4" = 36'-8" 2 K @ 3'-4" = 6'-8" 1 3/4 K @ 3'-4" = 5'-9"	11	1.09"	59'-3 1/4"	CP 16	A36	3"x.25	41'-2"	4	1.09	3"	P8	A36	2	4 1/2"x.39	5"	RA2	A36	3"x2"x.33"	7 1/2"	P12	A36	1"x3/8"	7 1/2"

COLUMN END

Es END	TRUSS DESIGNAT.	BEARING ANGLES					WE	DOUBLE STRUT				CHORD PLATE				END STIFFENER MK. V8			END STIFFENER MK. V9			END STIFFENER MK. V10			CHANNEL			
		MK.	TYPE STEEL	CHORD SIZE	PCS.	LENGTH		MK.	TYPE STEEL	DIA.	LENGTH (2 REQ'D)	MK.	TYPE STEEL	SIZE	LENGTH	TYPE STEEL	DIA.	LENGTH	TYPE STEEL	DIA.	LENGTH	TYPE STEEL	DIA.	LENGTH	MK.	TYPE STEEL	CHANNEL SIZE	LENGTH
	C32T17BL-598.5	9 9A	A242 A242	2"x1 1/2"x.25 2"x1 1/2"x.25	2 1	[illegible] 8 1/2"	5'-4 1/4"	DS 3B	A242	1.14	2'-6 3/4"	-	-	-	-	A242	1.14	10 1/2"	A242	1.14	8'-3 7/8"	—	—	—	CH L CH R	A36 A36	10 - 30 10 C 30	10'-0" 10'-0"

CORE END

EL END	TRUSS DESIGNATION	BEARING ANGLES				WE_V	DIAGONAL "T_V" STRUT				VERTICAL "ST_V" STRUT				END STIFFENER MK. V1			END STIFFENER MK. V2			END STIFFENER MK. V4			DOUBLE STRUT				DOUBLE STRUT			
		MK.	TYPE STEEL	CHORD SIZE	LENGTH		MK.	TYPE STEEL	DIA.	LENGTH	MK.	TYPE STEEL	DIA.	LENGTH	TYPE STEEL	DIA.	LENGTH	TYPE STEEL	DIA.	LENGTH	TYPE STEEL	DIA.	LENGTH	MK.	TYPE STEEL	DIA.	LENGTH	MK.	TYPE STEEL	DIA.	LENGTH
	C32T17BL-598.5	9_V	A242	2"x1 1/2"x.25	1'-6"	5'-2"	10	A242	1.14	5'-6 1/8"	5	A242	1.14	2'-4 7/8"	A242	1.14	4 3/8"	—	—	—	A242	1.14	2'-8 1/2"	-	—	—	—	—		—	—

CHECK DIMENSION FOR TRUSS FAB.

LOCATION OF TRANS. TRUSS				
CL-1	CL-2	CL-3	CL-4	Fs
9'-6 1/2"	22'-10 1/2"	36'-2 1/2"	49'-6 1/2"	7'-4 1/2"

FLOOR TRUSS DETAILS
FOR
WORLD TRADE CENTER - N.Y.C.
FOR
THE PORT OF NEW YORK AUTHORITY

FLOOR TRUSS C32T17BL (SEE NOTE 2) x 59'-8 1/2"
WORLD TRADE CENTER TOWERS A & B

FABRICATION BY LACLEDE STEEL COMPANY

FABRICATED AT MADISON, ILLINOIS		DESIGN DRAWING NO. 7-AB1-16	PLATE
APPROVED FOR FABRICATION BY ___ FOR P.O.N.Y.A	DATE	DRAWN BY gdc DATE APRIL 11, 1969	
APPROVED FOR FABRICATION BY ___ FOR FABRICATOR	DATE	CHECKED BY: T.M. CHURA DATE APRIL 11, 1969	IN CHARGE OF PROD. DEV.
LACLEDE STEEL CO. DETAILED BY:		FABRICATION CONT. NO. W.T.C. 221	SHEET NO. ST 217BL

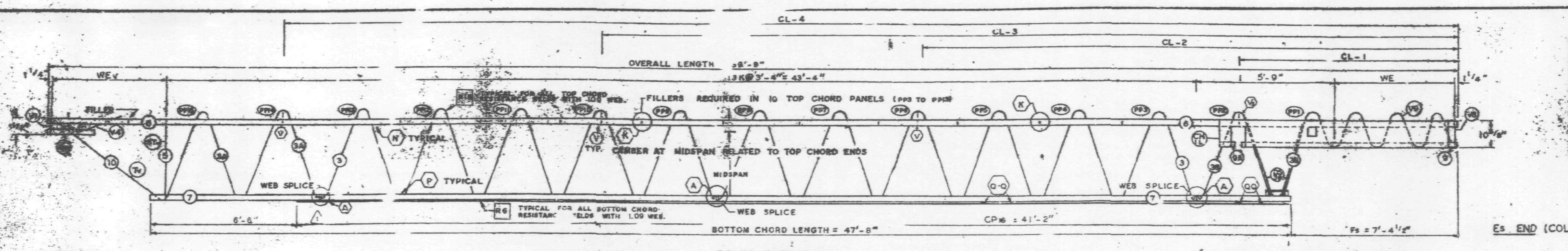

TRUSS ELEVATION

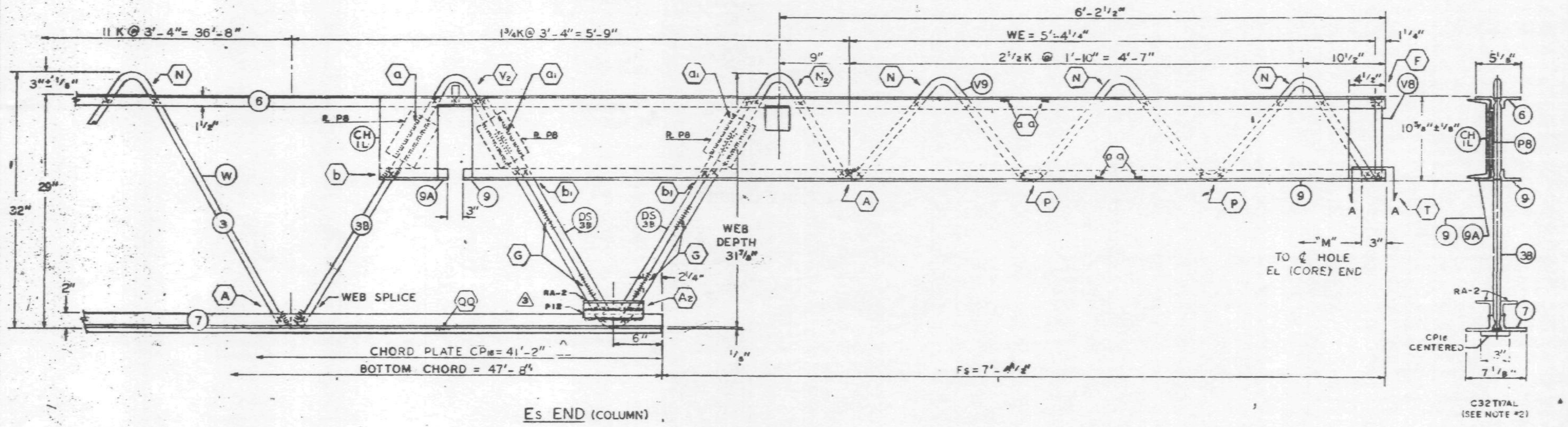

Es END (COLUMN)

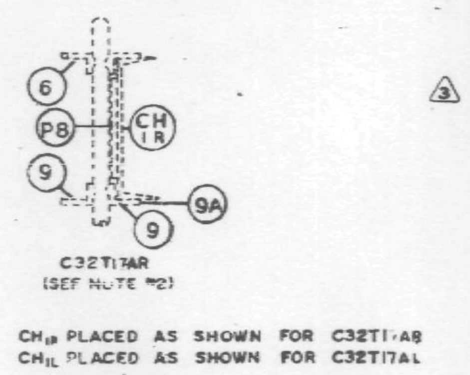

ALL PANEL POINTS RESISTANCE WELDED. (x).
ARC WELDS INDICATED AT SHADED AREAS AND AT BOTTOM CHORD WEB SPLICES.
LETTERS IN HEXAGON INDICATE WELD DETAIL, ie., (A).
LETTERS AND NUMBERS IN SQUARES INDICATE RESISTANCE WELD STRENGTH IDENTIFIED IN THE QUALITY CONTROL PROGRAM, ie., [R9].
ALL WELD DETAILS SHOWN ON SHEETS ST290, ST291, ST292 & ST293. (3)
ALL CHANNEL DETAILS SHOWN ON SHEET ST 407.
CHORD PLATE DETAILS SHOWN ON SHEET ST 283.

NOTE 2

ALL DETAILS & ELEVATIONS SHOWN FOR C32T17AL TRUSSES ARE APPLICABLE TO C32T17AR TRUSSES WITH CHANNEL CH1R AND BEARING ANGLE 9A PLACED ON OPP. HAND AS SHOWN.

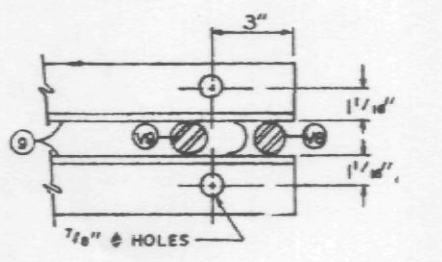

SECTION A-A

NO	DATE	REVISION	BY
3	12-10-68	AS NOTED	G.D.C.
2	11-7-68	AS NOTED	G.D.C.
1	10-31-68	CP16 -	LWH

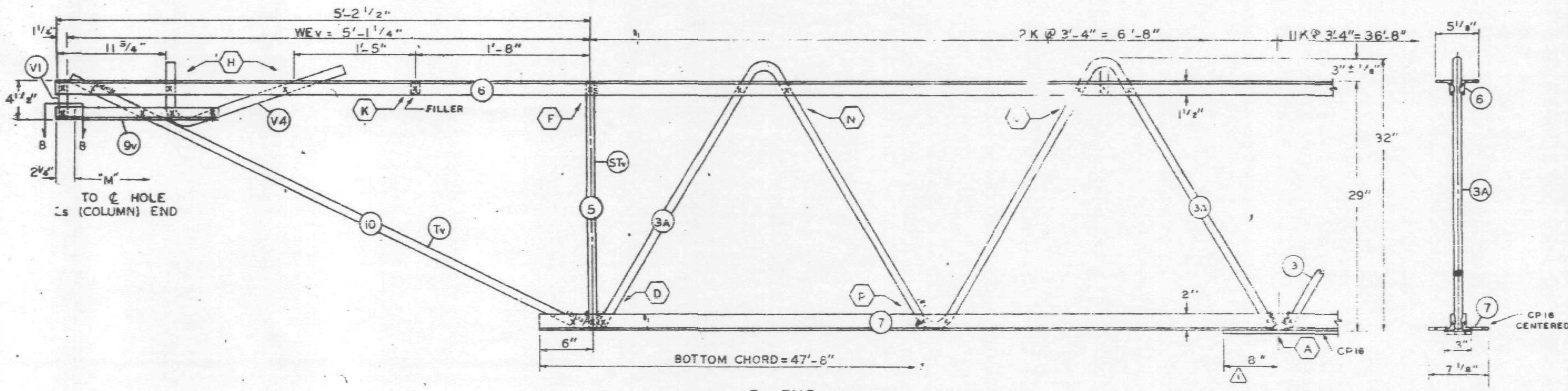

EL END (CORE)

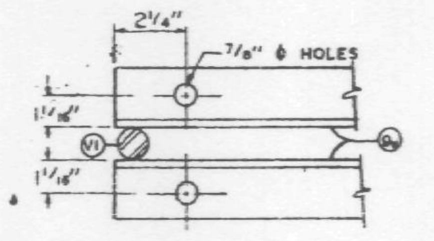

SECTION B-B

(3) REF. DRWG.

7-AB1-16	10-4-68
7-AB1-54	11-25-68
7-AB1-53	7-22-68
7-AB3-2	1-3-68
7-AB3-24	8-15-68
7-AB4-17 & 17.2	10-4-68
SA-124	10-11-68
7-AB1-55	10-15-68

PAINT

LACLEDE ELECTROCOAT
RED NO. 10001

TRUSS DESIGNATION	TOP CHORD TWO ANGLES				BOTTOM CHORD TWO ANGLES				MAIN WEB "W"					FILLER		"M" C/C HOLES	CHORD PLATE (1)				CONNECTION FILLERS			CHANNEL PLATES					REINFORCING ANGLES (3)				SPECIAL PLATES			
	MK.	TYPE STEEL	CHORD SIZE	LENGTH	MK.	TYPE STEEL	CHORD SIZE	LENGTH	MK.	TYPE STEEL	DIA.	LENGTH	NO. OF K	NO.	DIA.		MK.	TYPE STEEL	SIZE	LENGTH	NO	DIA	LENGTH	MK	TYPE STEEL	PCS.	SIZE	LENGTH	MK.	TYPE STEEL	ANGLE SIZE	(2 REQ'D) LENGTH	MK.	TYPE STEEL	SIZE	(2 REQ'D) LENGTH
C32T17AL-599	6	A242	2"x1 1/2"x.31	59'-9"	7	A36	3"x2"x.33"	47'-8"	3	A36	1.09	68'-6 1/4"	11 K @ 3'-4" = 36'-8"	11	1.09"	59'-3 3/4"	CP16	A36	3"x.25	41'-2"	4	1.09	3"	P8	A36	3	4 1/2"x.39	5 1/2"	RA2	A36	3 1/2"x2"x.33"	7 1/2"	P12	A36	1"x3/8"	7 1/2"
									3A	A242	1.14	12'-5 1/2"	2 K @ 3'-4" = 6'-8"																							
									3B	A242	1.14	10'-7 5/8"	1 3/4K @ 3'-4" = 5'-9"																							

COLUMN END

Es END	TRUSS DESIGNATION	BEARING ANGLES					WE	DOUBLE STRUT				CHORD PLATE				END STIFFENER MK. V8			MK. V9			MK. V10			CHANNEL			
		MK.	TYPE STEEL	CHORD SIZE	PCS.	LENGTH		MK.	TYPE STEEL	DIA.	LENGTH (2 REQ'D)	MK.	TYPE STEEL	SIZE	LENGTH	TYPE STEEL	DIA.	LENGTH	TYPE STEEL	DIA.	LENGTH	TYPE STEEL	DIA.	LENGTH	MK.	TYPE STEEL	CHANNEL SIZE	LENGTH
	C32T17AL-599	9	A242	2"x1 1/2"x.25"	2	9'-5"	5'-4 1/4	DS3B	A242	1.14	2'-6 3/4"	—	—	- -	- - -	A242	1.14	10 1/2"	A242	1.14	8'-3 7/8"	—	—	—	CH1L	A36	10 ⊏ 30	10'-0"
		9A	A242	2"x1 1/2"x.25"	1	8 1/2"																			CH1R	A36	10 ⊏ 30	10'-0"

CHECK DIMENSION FOR TRUSS FAB.

LOCATION OF TRANS. TRUSS				
CL-1	CL-2	CL-3	CL-4	Fs
9'-6 1/2"	22'-10 1/2"	36'-2 1/2"	49'-6 1/2"	7'-4 1/2"

CORE END

EL END	TRUSS DESIGNATION	BEARING ANGLES				WEv	DIAGONAL "Tv" STRUT				VERTICAL "STv" STRUT				END STIFFENER MK. V1			MK. V2			MK. V4			DOUBLE STRUT				DOUBLE STRUT			
		MK.	TYPE STEEL	CHORD SIZE	LENGTH		MK.	TYPE STEEL	DIA.	LENGTH	MK.	TYPE STEEL	DIA.	LENGTH	TYPE STEEL	DIA.	LENGTH	TYPE STEEL	DIA.	LENGTH	TYPE STEEL	DIA.	LENGTH	MK.	TYPE STEEL	DIA.	LENGTH	MK.	TYPE STEEL	DIA.	LENGTH
	C32T17AL-599	9v	A242	2"x1 1/2"x.25	1'-7"	5'-1 1/4	10	A242	1.14	5'-6 1/2"	5	A242	1.14	2'-4 7/8"	A242	1.14	4 3/8"	—	—	—	A242	1.14	2'-2 1/2"	-	—	—	—	—	—	—	—

(2)

FLOOR TRUSS DETAILS
FOR
WORLD TRADE CENTER - N.Y.C.
FOR
THE PORT OF NEW YORK AUTHORITY

FLOOR TRUSS C32T17AL (SEE NOTE 2) x 59'-9"
WORLD TRADE CENTER TOWERS A & B

FABRICATION BY LACLEDE STEEL COMPANY

FABRICATED AT MADISON, ILLINOIS	DESIGN DRAWING NO. 7-AB1-16	PLATE
APPROVED FOR FABRICATION FOR P.O.N.Y.A. James White — DATE 12/16/68	DRAWN BY: gdc DATE OCT. 8, 1968	
APPROVED FOR FABRICATION BY: FOR FABRICATOR — DATE	CHECKED BY: T.M. CHURA DATE OCT. 9, 1968	IN CHARGE OF PROD. DEV.
LACLEDE STEEL CO. DETAILED BY: A. CARL WEBER	FABRICATION CONT. NO. W.T.C. 221	SHEET ST 217

I

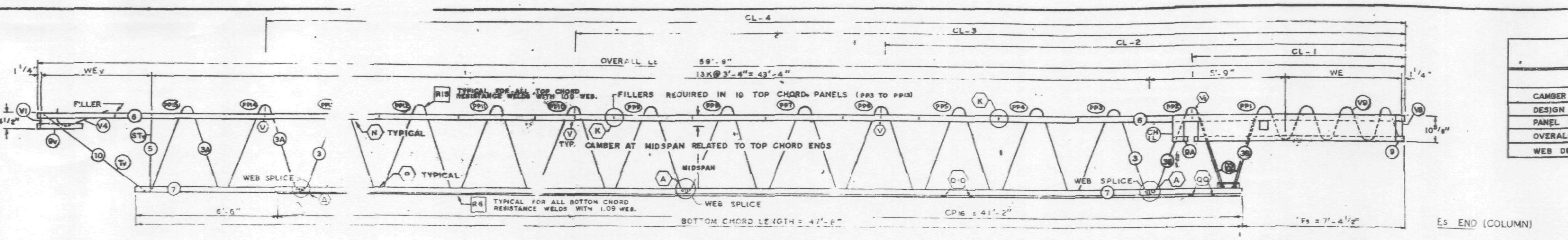

TRUSS ELEVATION

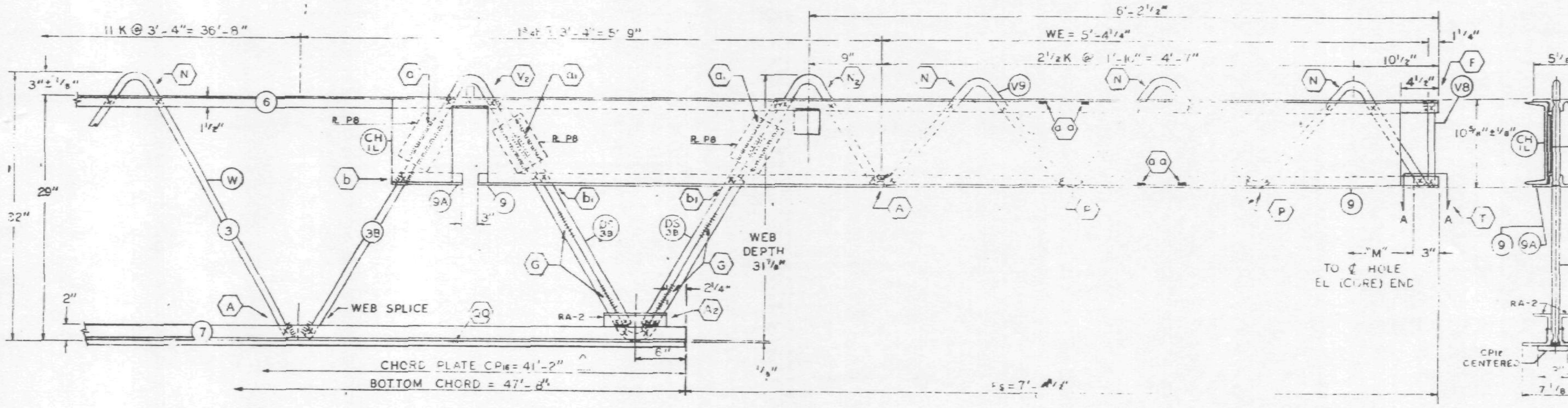

Es END (COLUMN)

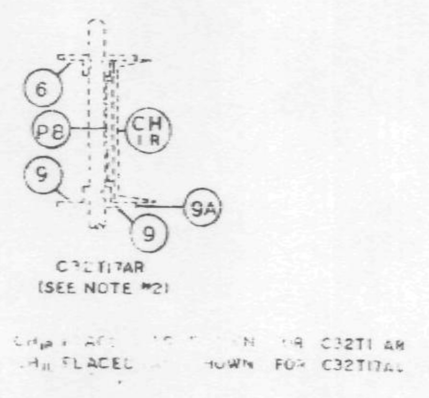

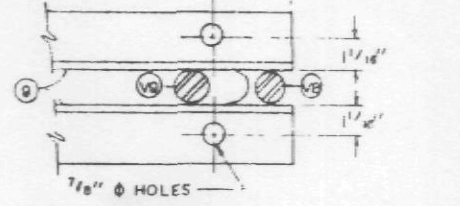

SECTION A-A

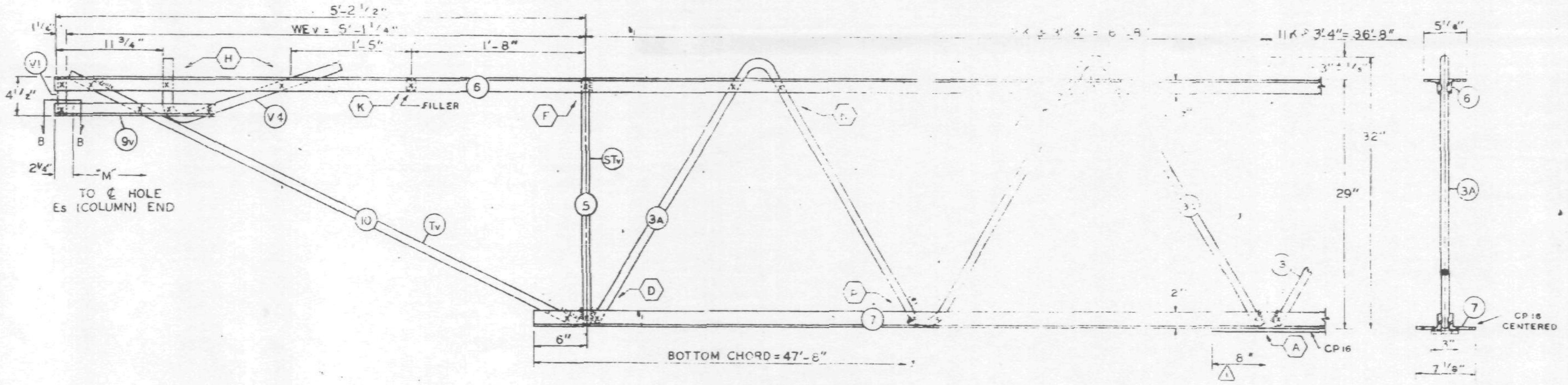

EL END (CORE)

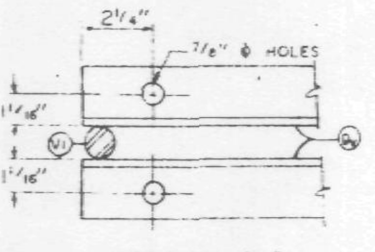

SECTION B-B

FABRICATION REQUIREMEN	DESIGN	TOLERANCE
CAMBER AT MIDSPAN	2"	± 3/8"
DESIGN DEPTH	29"	± 1/4"
PANEL K	3'-4"	± 1 1/4"
OVERALL LENGTH	59'-9"	± 1/8"
WEB DEPTH	31 7/8"	± 1/4"

ALL PANEL POINTS RESISTANCE WELDED. (x).
ARC WELDS INDICATED AT SHADED AREAS AND AT BOTTOM CHORD WEB SPLICES.
LETTERS IN HEXAGON INDICATE WELD DETAIL, ie., (A).
LETTERS AND NUMBERS IN SQUARES INDICATE RESISTANCE WELD STRENGTH IDENTIFIED IN THE QUALITY CONTROL PROGRAM, ie., [R9].
ALL WELD DETAILS SHOWN ON SHEETS ST290, ST291.

ALL CHANNEL DETAILS SHOWN ON SHEET ST 407.
CHORD PLATE DETAILS SHOWN ON SHEET ST 283.

NOTE 2

ALL DETAILS & ELEVATIONS SHOWN FOR C32T17AL TRUSSES ARE APPLICABLE TO C32T17AR TRUSSES WITH CHANNEL CHIR AND BEARING ANGLE 9A PLACED ON OPP. HAND AS SHOWN.

NO	DATE	REVISION	BY
2	11-7-68	AS NOTED	G.D.C.
1	10-31-68	CP16	LWH

2 REF. DRWG.

7-AB1-18	10-4-68
7-AB1-54	10-4-68
7-AB1-53	7-22-68
7-AB3-2	1-3-68
7-AB3-24	8-15-68
7-AB4-17 & 17.2	10-4-68
SA-124	10-11-68
7-AB1-55	10-15-68

PAINT
LACLEDE ELECTROCOAT
RED NO. 10001

TRUSS DESIGNATION	TOP CHORD TWO ANGLES				BOTTOM CHORD TWO ANGLES				MAIN WEB "W"					FILLER		"M" C/C HOLES	CHORD PLATE				SPLICE FILLERS			CHANNEL PLATES					REINFORCING ANGLES (2 REQ'D)				TRUSS DATA
	MK.	TYPE STEEL	CHORD SIZE	LENGTH	MK.	TYPE STEEL	CHORD SIZE	LENGTH	MK.	TYPE STEEL	DIA.	LENGTH	NO. OF K	NO.	DIA.		MK.	TYPE STEEL	SIZE	LENGTH	NO.	DIA.	LENGTH	MK.	TYPE STEEL	PCS.	SIZE	LENGTH	MK.	TYPE STEEL	SIZE	LENGTH	
C32T17AL-599	6	A242	2"x1 1/2"x .31	59'-9"	7	A36	3" x 2" x .33"	47'-8"	3	A36	1.09	68'-8 1/4"	11 K @ 3'-4" = 36'-8"	11	1.09"	59'-3 3/4"	CP16	A36	3"x.25	41'-2"	4	1.09	3"	P8	A36	3	4 2"x39	5'-2"	RA-2	A36	3"x 2"x.33	7 1/2"	
									3A	A242	1.14	12'-5 1/2"	2 K @ 3'-4" = 6'-8"																				
									3B	A242	1.14	10'-7 5/8"	3.4K @ 3'-4" = 5'-9"																				

COLUMN END

Es END	TRUSS DESIGNATION	BEARING ANGLES					WE	DOUBLE STRUT				CHORD PLATE				END STIFFENER MK. V8			END STIFFENER MK. V9			END STIFFENER MK. V10			CHANNEL			
		MK.	TYPE STEEL	CHORD SIZE	PCS.	LENGTH		MK.	TYPE STEEL	DIA	LENGTH (2 REQ'D)	MK.	TYPE STEEL	SIZE	LENGTH	TYPE STEEL	DIA.	LENGTH	TYPE STEEL	DIA.	LENGTH	TYPE STEEL	DIA.	LENGTH	MK.	TYPE STEEL	CHANNEL SIZE	LENGTH
	C32T17AL-599	9	A242	2"x1 1/2"x.25"	2	9'-5"	5'-4 1/4"	DS 3B	A242	1.14	2'-6 3/4"	—	—	—	—	A242	1.14	10 1/2"	A242	1.14	8'-3 7/8"	—	—	—	CHIL	A36	10 " 30	10'-0"
		9A	A242	2"x1 1/2"x.25"	1	8 1/2"																			CHIR	A36	10 " 30	10'-0"

CORE END

EL END	TRUSS DESIGNATION	BEARING ANGLES				WE	DIAGONAL "Tv" STRUT				VERTICAL "STv" STRUT				END STIFFENER MK. V1			END STIFFENER MK. V2			END STIFFENER MK. V4			DOUBLE STRUT				DOUBLE STRUT			
		MK.	TYPE STEEL	CHORD SIZE	LENGTH		MK.	TYPE STEEL	DIA.	LENGTH	MK.	TYPE STEEL	DIA.	LENGTH	TYPE STEEL	DIA.	LENGTH	TYPE STEEL	DIA.	LENGTH	TYPE STEEL	DIA.	LENGTH	MK.	TYPE STEEL	DIA.	LENGTH	MK.	TYPE STEEL	DIA.	LENGTH
	C32T17AL-599	9v	A242	2"x1 1/2"x .25	1'-7"	5'-1 1/4"	10	A242	1.14	5'-6 1/2"	5	A242	1.14	2'-4 7/8"	A242	1.14	4 3/8"	—	—	—	A242	1.14	2'-2 1/2"	-	—	—	—	—	—	—	—

CHECK DIMENSION FOR TRUSS FAB.

LOCATION OF TRANS. TRUSS				
CL-1	CL-2	CL-3	CL-4	Fs
9'-6 1/2"	22'-10 1/2"	36'-2 1/2"	49'-6 1/2"	7'-4 1/2"

FLOOR TRUSS DETAILS
FOR
WORLD TRADE CENTER - N.Y.C.
FOR
THE PORT OF NEW YORK AUTHORITY

FLOOR TRUSS, C32T17AL (SEE NOTE 2) x 59'-9"
WORLD TRADE CENTER TOWERS A & B

FABRICATION BY LACLEDE STEEL COMPANY

FABRICATED AT MADISON, ILLINOIS		DESIGN DRAWING NO. 7-AB1-16	PLATE
APPROVED FOR FABRICATION BY: FOR P.O.N.Y.A.	DATE 11/18/68	DRAWN BY gdc DATE OCT. 8, 1968	
APPROVED FOR FABRICATION BY FOR FABRICATOR	DATE	CHECKED BY T.M.CHURA DATE OCT. 9 1968	IN CHARGE OF PROD. DEV.
DETAILED BY A CARL WEBER		FABRICATION CONT. NO. W.T.C. 221	SHEET NO ST 217AL

1100-1199

WTC1-131-LERA

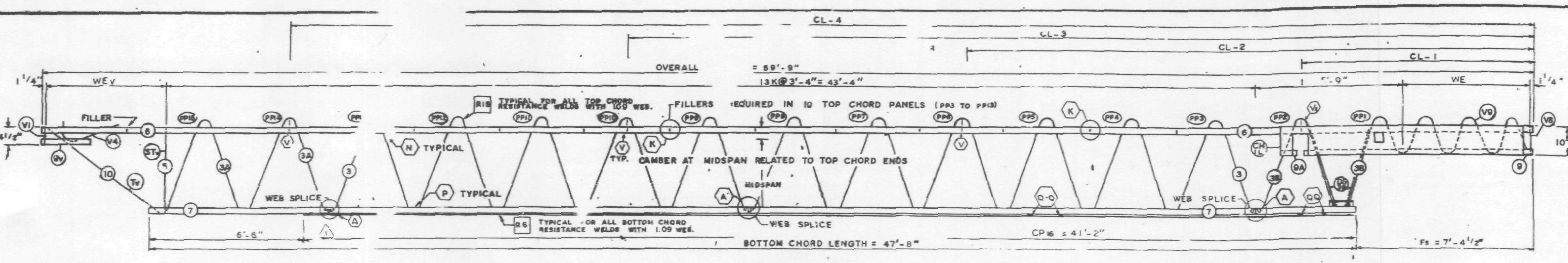

TRUSS ELEVATION

FABRICATION REQUIREME[NTS]		
	DESIGN	TOLERANCE
CAMBER AT MIDSPAN	2"	± 3/8"
DESIGN DEPTH	29"	± 1/4"
PANEL K	3'-4"	± 1/4"
OVERALL LENGTH	59'-9"	- 3/8"
WEB DEPTH	31 7/8"	± 1/4"

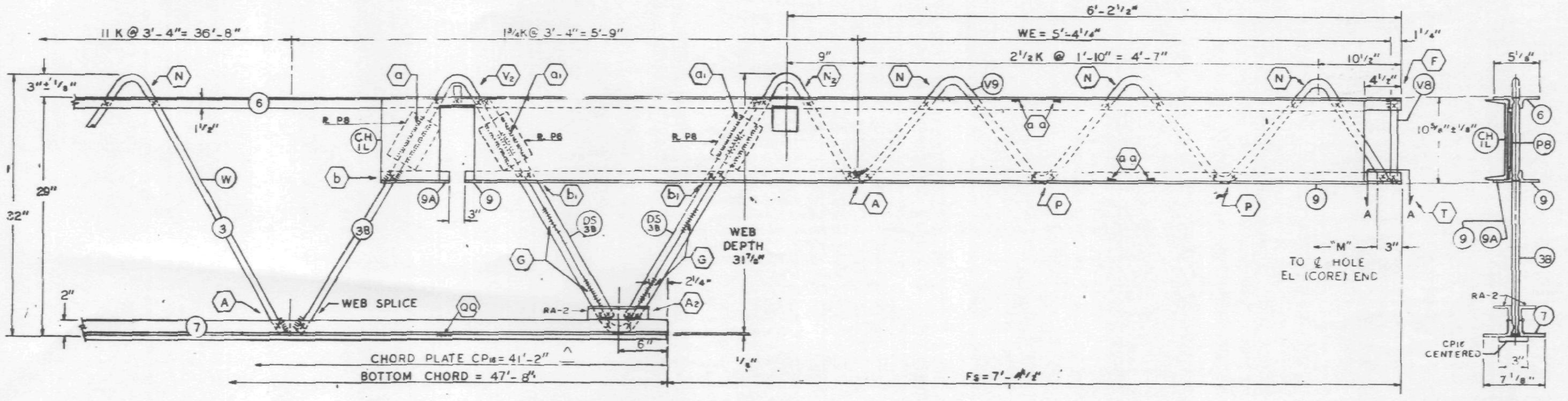

Es END (COLUMN)

ALL PANEL POI[NTS] RESISTANCE WELDED. (x).
ARC WELDS INDICATED AT SHADED AREAS AND AT BOTTOM CHORD WEB SPLICES.
LETTERS IN HEXAGON INDICATE WELD DETAIL, ie., (A).
LETTERS AND NUMBERS IN SQUARES INDICATE RESISTANCE WELD STRENGTH IDENTIFIED IN THE QUALITY CONTROL PROGRAM, ie., [R9].
ALL WELD DETAILS SHOWN ON SHEETS ST290, ST291.

ALL CHANNEL DETAILS SHOWN ON SHEET ST 407.
CHORD PLATE DETAILS SHOWN ON SHEET ST 283.

NOTE 2

ALL DETAILS & ELEVATIONS SHOWN FOR C32T17AL TRUSSES ARE APPLICABLE TO C32T17AR TRUSSES WITH CHANNEL CH1R AND BEARING ANGLE 9A PLACED ON OPP. HAND AS SHOWN.

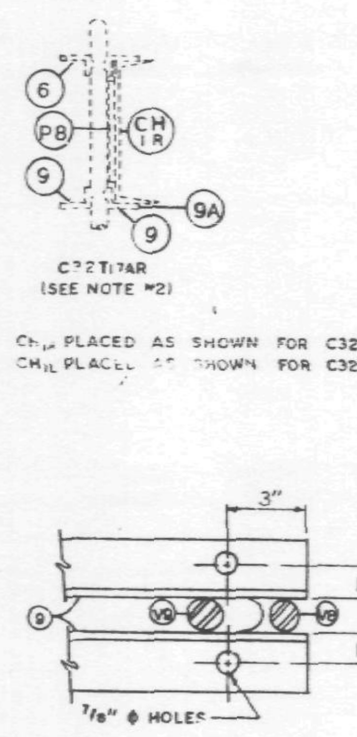

SECTION A-A

NO	DATE	REVISION	BY
1	10-31-68	CP 16	LWH

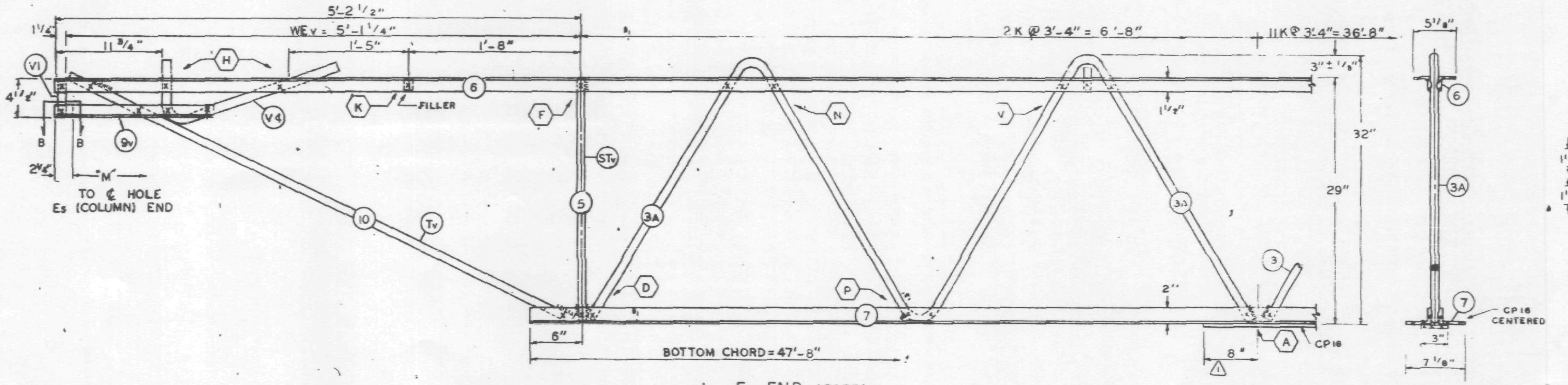

EL END (CORE)

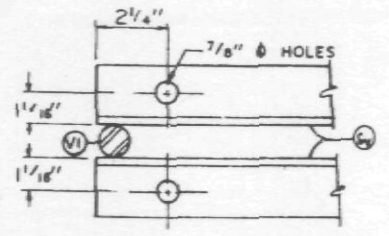

SECTION B-B

REF. DRWG.

7-AB1-16	8-15-68
7-AB1-54	8-15-68
7-AB1-53 & 55	7-22-68
7-AB3-2	1-3-68
7-AB3-24	8-15-68
7-AB4-17 & 17.2	8-15-68
SA-124	8-1-68

PAINT

LACLEDE ELECTROCOAT
RED NO. 10001

TRUSS DESIGNATION	TOP CHORD TWO ANGLES				BOTTOM CHORD TWO ANGLES				MAIN WEB "W"					FILLER		"M" C/C HOLES	CHORD PLATE ⚠1				CONNECTION FILLERS			CHANNEL PLATES					REINFORCING ANGLES (2 REQ'D)				TRUSS DATA
	MK	TYPE STEEL	CHORD SIZE	LENGTH	MK	TYPE STEEL	CHORD SIZE	LENGTH	MK	TYPE STEEL	DIA.	LENGTH	NO. OF K	NO.	DIA.		MK	TYPE STEEL	SIZE	LENGTH	NO	DIA	LENGTH	MK	TYPE STEEL	PCS.	SIZE	LENGTH	MK	TYPE STEEL	SIZE	LENGTH	
C32T17AL-599	6	A242	2"x1 1/2"x.31	59'-9"	7	A36	3"x2"x.33"	47'-8"	3	A36	1.09	58'-8 1/4"	11 K @ 3'-4" = 36'-8"	11	1.09"	59'-3 3/4"	CP 16	A36	3"x25	41'-2"	4	1.09	3"	P8	A36	3	4 1/2"x39	5 1/2"	RA-2	A36	3"x2"x.33"	7 1/2"	
									3A	A242	1.14	12'-5 1/2"	2 K @ 3'-4" = 6'-8"																				
									3B	A242	1.14	10'-7 5/8"	1 3/4 K @ 3'-4" = 5'-9"																				

COLUMN END

Es END	TRUSS DESIGNATION	BEARING ANGLES					WE	DOUBLE STRUT				CHORD PLATE				END STIFFENER MK. V8			MK. V9			MK. V10			CHANNEL			
		MK.	TYPE STEEL	CHORD SIZE	PCS.	LENGTH		MK.	TYPE STEEL	DIA.	LENGTH (2 REQ'D)	MK.	TYPE STEEL	SIZE	LENGTH	TYPE STEEL	DIA.	LENGTH	TYPE STEEL	DIA.	LENGTH	TYPE STEEL	DIA.	LENGTH	MK.	TYPE STEEL	CHANNEL SIZE	LENGTH
	C32T17AL-599	9	A242	2"x1 1/2"x.25"	2	9'-5"	5'-4 1/4	DS 3B	A242	1.14	2'-6 3/4"	—	—	—	—	A242	1.14	10 1/2"	A242	1.14	8'-3 7/8"	—	—	—	CH1L	A36	10 C 30	10'-0"
		9A	A242	2"x1 1/2"x.25"	1	8 1/2"																			CH1R	A36	10 C 30	10'-0"

CHECK DIMENSION FOR TRUSS FAB.

LOCATION OF TRANS. TRUSS				
CL-1	CL-2	CL-3	CL-4	Fs
9'-6 1/2"	22'-10 1/2"	36'-2 1/2"	49'-6 1/2"	7'-4 1/2"

CORE END

EL END	TRUSS DESIGNATION	BEARING ANGLES				WEv	DIAGONAL "Tv" STRUT				VERTICAL "STv" STRUT				END STIFFENER MK. V1			MK. V2			MK. V4			DOUBLE STRUT				DOUBLE STRUT			
		MK.	TYPE STEEL	CHORD SIZE	LENGTH		MK.	TYPE STEEL	DIA.	LENGTH	MK.	TYPE STEEL	DIA.	LENGTH	TYPE STEEL	DIA.	LENGTH	STEEL	DIA.	LENGTH	TYPE STEEL	DIA.	LENGTH	MK.	TYPE STEEL	DIA.	LENGTH	MK.	TYPE STEEL	DIA.	LENGTH
	C32T17AL-599	9v	A242	2"x1 1/2"x .25	1'-7"	5'-1 1/4"	10	A242	1.14	5'-6 1/2"	5	A242	1.14	2'-4 3/4"	A242	1.14	4 3/8"	—	—	—	A242	1.14	2'-2 1/2"	-	—	—	—	—	—	—	—

FLOOR TRUSS DETAILS
FOR
WORLD TRADE CENTER - N.Y.C.
FOR
THE PORT OF NEW YORK AUTHORITY

FLOOR TRUSS C32T17AL (SEE NOTE 2) x 59'-9"

WORLD TRADE CENTER TOWERS A & B

FABRICATION BY LACLEDE STEEL COMPANY

FABRICATED AT MADISON, ILLINOIS		DESIGN DRAWING NO. 7-AB1-16	PLATE
APPROVED FOR FABRICATION BY: FOR P.O.N.Y.A.	DATE 11/7/68	DRAWN BY: gdc DATE OCT. 8, 1968	
APPROVED FOR FABRICATION BY: FOR FABRICATOR	DATE	CHECKED BY: T.M. CHURA DATE OCT. 9 1968	IN CHARGE OF PROD. DEV.
DETAILED BY: A. CARL WEBER		FABRICATION CONT. NO. W.T.C. 221	SHEET NO. ST 217AL

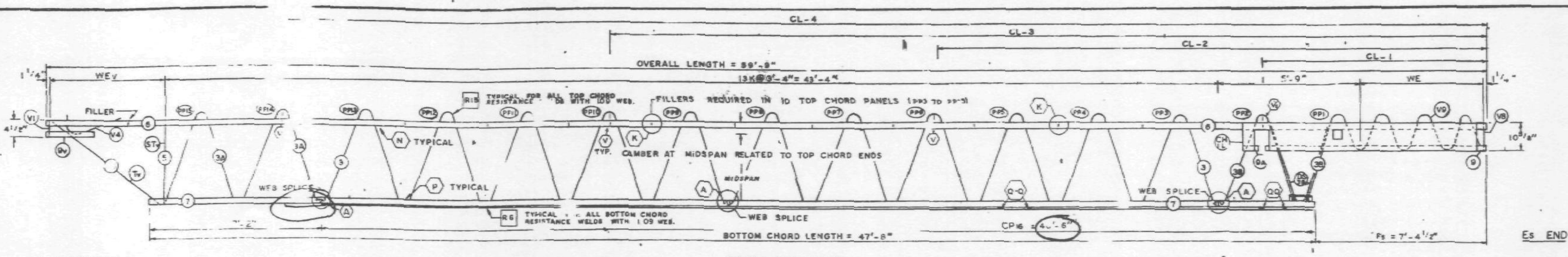

EL END (CORE)

TRUSS ELEVATION

Es END (COLUMN)

FABRICATION REQUIREMENTS		
	DESIGN	TOLERANCE
CAMBER AT MIDSPAN	2"	± 3/8"
DESIGN DEPTH	29"	± 1/4"
PANEL K	3'-4"	± 1/4"
OVERALL LENGTH	59'-9"	± 3/8"
WEB DEPTH	31 7/8"	± 1/4"

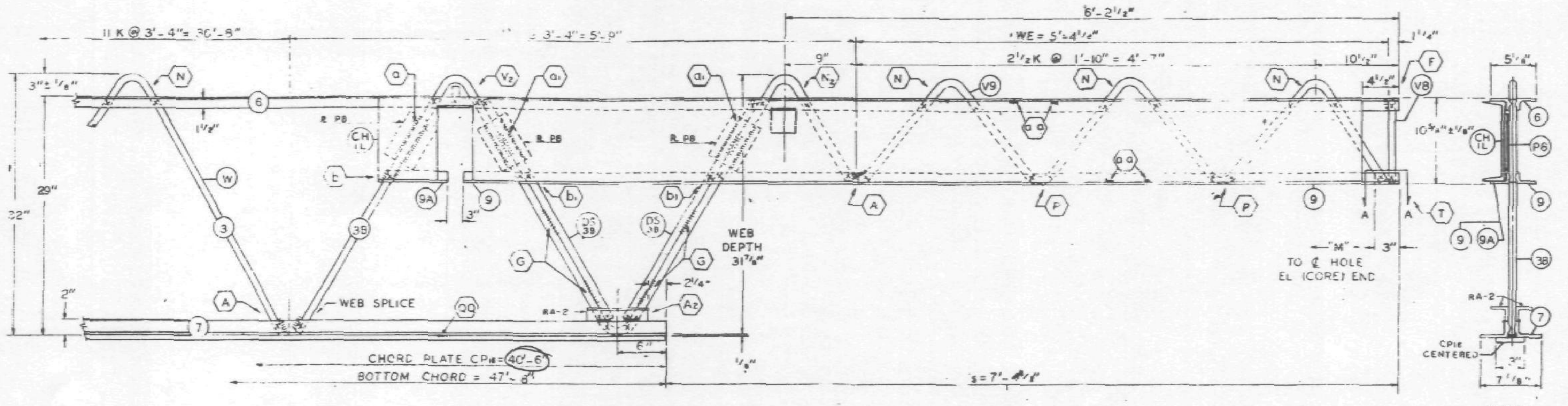

Es END (COLUMN)

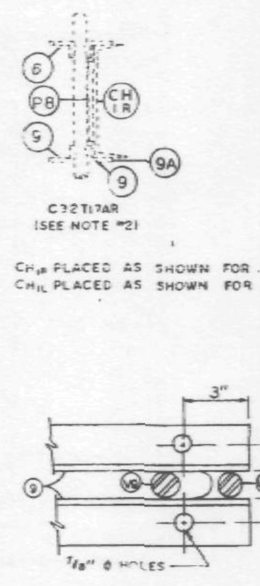

SECTION A-A

ALL PANEL POINTS RESISTANCE WELDED (x).
ARC WELDS INDICATED AT SHADED AREAS
AND AT BOTTOM CHORD WEB SPLICES.
LETTERS IN HEXAGON INDICATE WELD DETAIL, ie.,
LETTERS AND NUMBERS IN SQUARES INDICATE
RESISTANCE WELD STRENGTH IDENTIFIED IN THE
QUALITY CONTROL PROGRAM, ie., R9.
ALL WELD DETAILS SHOWN ON SHEET [illegible]

ALL CHANNEL DETAILS SHOWN ON SHEET ST [illegible]
CHORD PLATE DETAILS SHOWN ON SHEET ST 263.

NOTE 2

ALL DETAILS & ELEVATIONS SHOWN FOR C32T17AL TRUSSES ARE APPLICABLE TO C32T17AR TRUSSES WITH CHANNEL CHR AND BEARING ANGLE 9A PLACED ON OPP. HAND AS SHOWN.

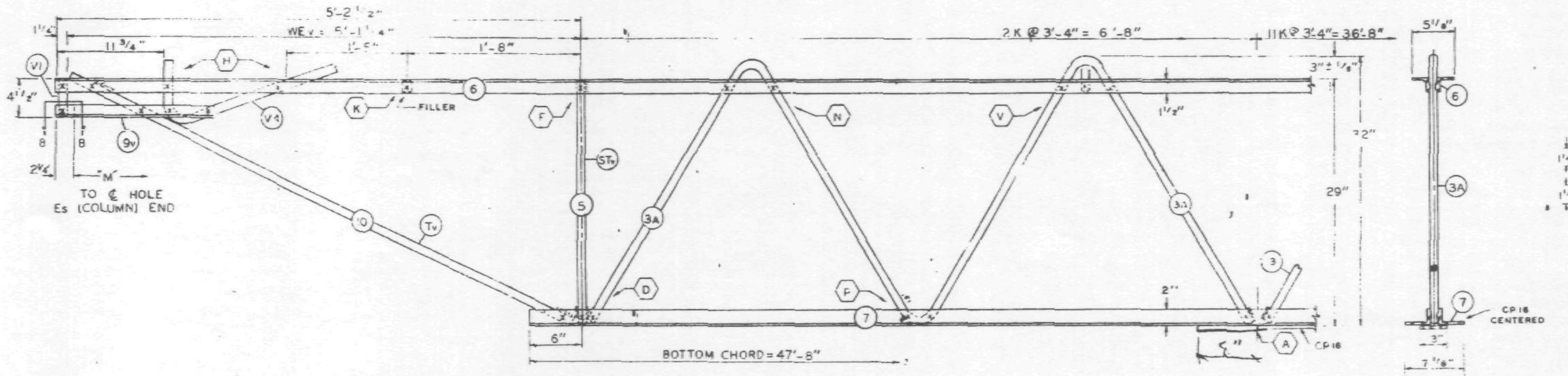

EL END (CORE)

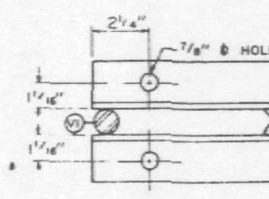

SECTION B-B

NO	DATE	REVISION	BY

REF. DRWG.

7-AB1-16	8-15-68
7-AB1-54	8-15-68
7-AB1-53 & 55	7-22-68
7-AB3-2	1-3-68
7-AB3-24	8-15-68
7-AB4-17 & 17.2	8-15-68
SA-124	8-1-68

X

10/29/68 SK

PAINT

LACLEDE ELECTROCOAT
RED NO. 10001

TRUSS DESIGNATION	TOP CHORD TWO ANGLES				BOTTOM CHORD TWO ANGLES				MAIN WEB "W"					FILLER		"M" C/C HOLES	CHORD PLATE				CONNECTION FILLERS			CHANNEL PLATES					REINFORCING ANGLES (2 REQ'D)				TRUSS DATA	
	MK.	TYPE STEEL	CHORD SIZE	LENGTH	MK.	TYPE STEEL	CHORD SIZE	LENGTH	MK.	TYPE STEEL	DIA.	LENGTH	NO. OF K	NO.	DIA.		MK.	TYPE STEEL	SIZE	LENGTH	NO	DIA	LENGTH	MK	TYPE STEEL	PCS.	SIZE	LENGTH	MK.	TYPE STEEL	SIZE	LENGTH		
C32T17AL-599	6	A242	2"x1 1/2"x.31	59'-9"	7	A36	3"x2"x.33"	47'-8"	3 3A 3B	A36 A242 A242	1.09 1.14 1.14	58'-8 1/4" 12'-5 1/2" 10'-7 5/8"	11 K @ 3'-4" = 36'-8" 2 K @ 3'-4" = 6'-8" [illegible]	11	1.09"	59'-3 3/4"	CP16	A36	3"x.25	40'-6"	4	1.09	3"	P6	A36	3	4 1/2"x.39	5 1/2"	RA-2	A36	3"x 2"x.33"	7 1/2"		

COLUMN END

Es END	TRUSS DESIGNATION	BEARING ANGLES					WE	DOUBLE STRUT				CHORD PLATE				END STIFFENER MK. V8			END STIFFENER MK. V9			END STIFFENER MK. V10			CHANNEL			
		MK.	TYPE STEEL	CHORD SIZE	PCS.	LENGTH		MK.	TYPE STEEL	DIA.	LENGTH (2 REQ'D)	MK.	TYPE STEEL	SIZE	LENGTH	TYPE STEEL	DIA.	LENGTH	TYPE STEEL	DIA.	LENGTH	TYPE STEEL	DIA.	LENGTH	MK.	TYPE STEEL	CHANNEL SIZE	LENGTH
	C32T17AL-599	9 9A	A242 A242	2"x1 1/2"x.25" 2"x1 1/2"x.25"	2 1	9'-5" 8 1/2"	5'-4 1/4"	DS	A242	1.14	2'-6 3/4"	-	---	- -	- - -	A242	1.14	10 1/2"	A242	1.14	8'-3 7/8"	—	—	—	CHL CHR	A36 A36	10 ⊏ 30 10 ⊏ 30	10'-0" 10'-0"

CHECK DIMENSION FOR TRUSS FAB.

LOCATION OF TRANS. TRUSS				
CL-1	CL-2	CL-3	CL-4	Fs
9'-6 1/2"	22'-10 1/2"	36'-2 1/2"	49'-6 1/2"	7'-4 1/2"

CORE END

EL END	TRUSS DESIGNATION	BEARING ANGLES				WEv	DIAGONAL "Tv" STRUT				VERTICAL "STv" STRUT				END STIFFENER MK. V1			END STIFFENER MK. V2			END STIFFENER MK. V4			DOUBLE STRUT				DOUBLE STRUT			
		MK.	TYPE STEEL	CHORD SIZE	LENGTH		MK.	TYPE STEEL	DIA.	LENGTH	MK.	TYPE STEEL	DIA.	LENGTH	TYPE STEEL	DIA.	LENGTH	TYPE STEEL	DIA.	LENGTH	TYPE STEEL	DIA.	LENGTH	MK.	TYPE STEEL	DIA.	LENGTH	MK.	TYPE STEEL	DIA.	LENGTH
	C32T17AL-599	9v	A242	2"x1 1/2"x.25"	1'-7"	5'-1 1/4"	10	A242	1.14	5'-6 1/2"	5	A242	1.14	2'-4 3/4"	A242	1.14	4 3/8"	—	—	—	A242	1.14	2'-2 1/2"	-	—	—	—	—	—	—	—

FLOOR TRUSS DETAILS
FOR
WORLD TRADE CENTER - N.Y.C.
FOR
THE PORT OF NEW YORK AUTHORITY

FLOOR TRUSS C32T17AL (SEE NOTE 2) x 59'-9"
WORLD TRADE CENTER TOWERS A & B

FABRICATION BY LACLEDE STEEL COMPANY

FABRICATED AT MADISON, ILLINOIS		DESIGN DRAWING NO. 7-AB1-16	PLATE
APPROVED FOR FABRICATION BY: FOR P.O.N.Y.A.	DATE	DRAWN BY: gdc DATE OCT. 8, 1968	
APPROVED FOR FABRICATION BY: FOR FABRICATOR	DATE	CHECKED BY: T.M. CHURA DATE OCT. 9, 1968	IN CHARGE OF PROD. DEV.
DETAILED BY: A. CARL WEBER		FABRICATION CONT. NO. W.T.C. 221	SHEET NO. ST 217AL

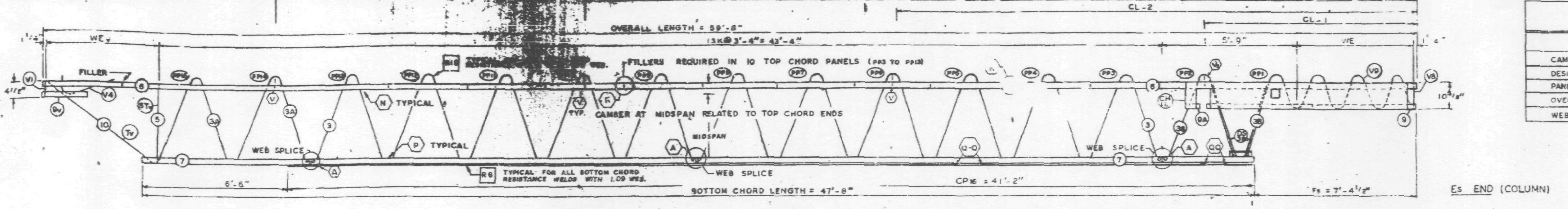

EL END (CORE)

TRUSS ELEVATION

Es END (COLUMN)

FABRICATION REQUIREMENTS		
	DESIGN	TOLERANCE
CAMBER AT MIDSPAN	2"	± 3/8"
DESIGN DEPTH	29"	± 1/4"
PANEL K	3'-4"	± 1/4"
OVERALL LENGTH	59'-8"	± 3/8"
WEB DEPTH	31 7/8"	± 1/4"

ALL PANEL POINTS RESISTANCE WELDED. (x).
ARC WELDS INDICATED AT SHADED AREAS AND AT BOTTOM CHORD WEB SPLICES.
LETTERS IN HEXAGON INDICATE WELD DETAIL, ie., (A).
LETTERS AND NUMBERS IN SQUARES INDICATE RESISTANCE WELD STRENGTH IDENTIFIED IN THE QUALITY CONTROL PROGRAM, ie., [R9].
ALL WELD DETAILS SHOWN ON SHEETS ST290, ST291, ST292 & ST293.
ALL CHANNEL DETAILS SHOWN ON SHEET ST407.
CHORD PLATE DETAILS SHOWN ON SHEET ST283.

NOTE 2

ALL DETAILS & ELEVATIONS SHOWN FOR C32T17CL TRUSSES ARE APPLICABLE TO C32T17CR TRUSSES WITH CHANNEL CH1R AND BEARING ANGLE 9A PLACED ON OPP. HAND AS SHOWN.

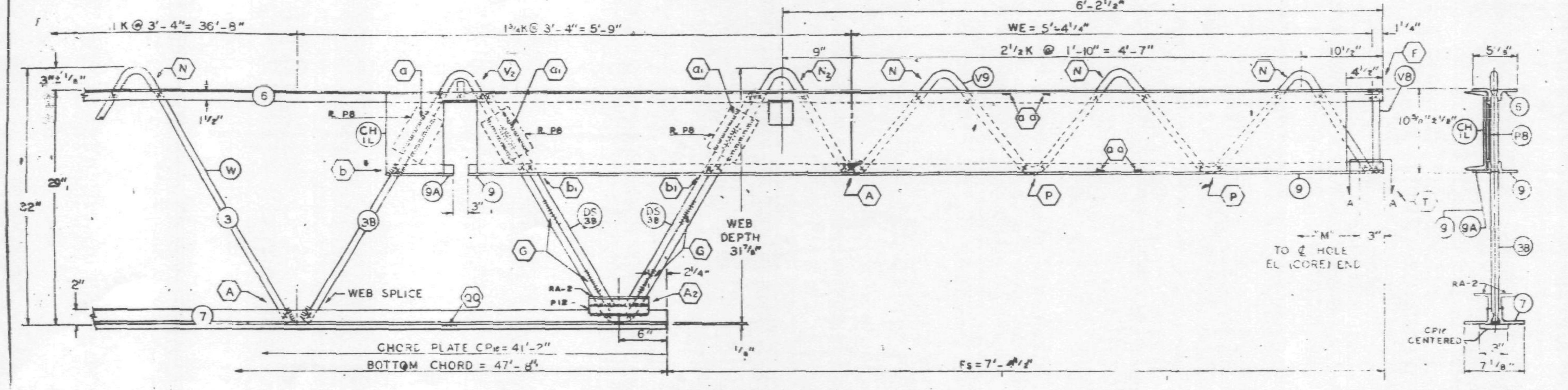

Es END (COLUMN)

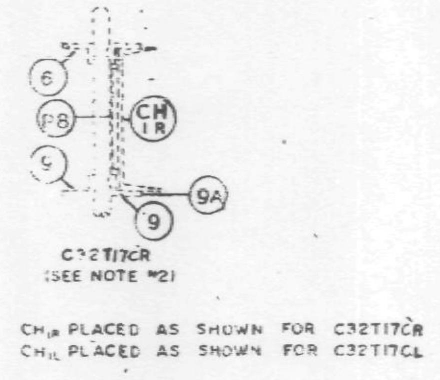

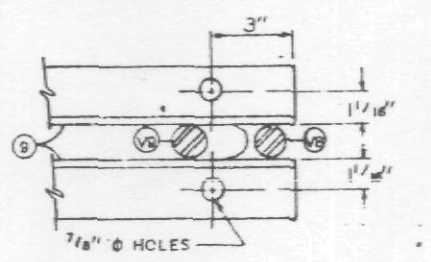

SECTION A-A

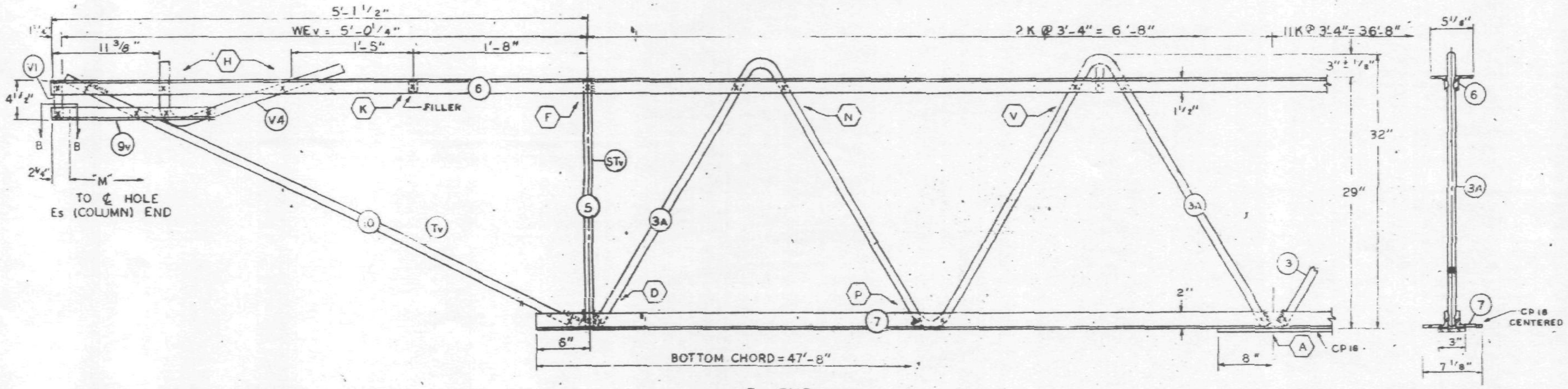

EL END (CORE)

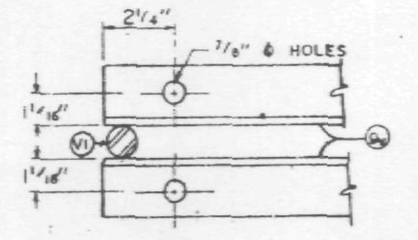

SECTION B-B

NO	DATE	REVISION	BY

REF. DRWG.

7-AB1-18	10-4-68
7-AB1-54	11-25-68
7-AB1-53	7-29-68
7-AB2-2	1-3-68
7-AB3-24	8-15-68
7-AB4-17 & 17.2	10-4-68
SA-124	10-11-68
7-AB1-55	10-15-68

PAINT
LACLEDE ELECTROCOAT
RED NO. 10001

TRUSS DESIGNATION	TOP CHORD TWO ANGLES				BOTTOM CHORD TWO ANGLES				MAIN WEB "W"					FILLER		"M" C/C HOLES	CHORD PLATE				CONNECTION FILLERS			CHANNEL PLATES					REINFORCING ANGLES				SPECIAL PLATES			
	MK	TYPE STEEL	CHORD SIZE	LENGTH	MK	TYPE STEEL	CHORD SIZE	LENGTH	MK	TYPE STEEL	DIA.	LENGTH	NO. OF K	NO.	DIA.		MK	TYPE STEEL	SIZE	LENGTH	NO	DIA	LENGTH	MK	TYPE STEEL	PCS.	SIZE	LENGTH	MK	TYPE STEEL	ANGLE SIZE	(2 REQ'D) LENGTH	MK	TYPE STEEL	SIZE	(2 REQ'D) LENGTH
C32T17CL-598	6	A242	2"x1 1/2"x.31	59'-8"	7	A36	3"x2"x.33"	47'-8"	3	A36	1.09	58'-8 1/4"	11 K@3'-4" = 36'-8"	11	1.09"	59'-2 3/4"	CP16	A36	3"x25	41'-2"	4	1.09	3"	P8	A36	3	4 1/2"x39	5 1/2"	RA2	A36	3"x2"x.33"	7 1/2"	P12	A36	1"x3/8"	7 1/2"
									3A	A242	1.14	12'-5 1/2"	2 K@3'-4" = 6'-8"																							
									3B	A242	1.14	10'-7 5/8"	1 3/4K@3'-4" = 5'-9"																							

COLUMN END

Es TRUSS DESIGNATION	BEARING ANGLES					WE	DOUBLE STRUT				CHORD PLATE				END STIFFENER MK. V8			MK. V9			MK. V10			CHANNEL			
	MK	TYPE STEEL	CHORD SIZE	PCS.	LENGTH		MK	TYPE STEEL	DIA	LENGTH (2 REQ'D)	MK	TYPE STEEL	SIZE	LENGTH	TYPE STEEL	DIA.	LENGTH	TYPE STEEL	DIA.	LENGTH	TYPE STEEL	DIA.	LENGTH	MK	TYPE STEEL	CHANNEL SIZE	LENGTH
C32T17CL-598	9	A242	2"x1 1/2"x.25"	2	9'-5"	5'-4 1/4"	DS	A242	1.14	2'-6 3/4"	—	—	—	—	A242	[illegible]	10 1/2"	A242	1.14	8'-3 7/8"	—	[illegible]	—	CH1L	A36	10 C 30	10'-0"
	9A	A242	[illegible]	1	8 1/2"																			CH1R	A36	10 C 30	10'-0"

CORE END

EL END TRUSS DESIGNATION	BEARING ANGLES				WEv	DIAGONAL "Tv" STRUT				VERTICAL "STv" STRUT				END STIFFENER MK. V1			MK. V2			MK. V4			DOUBLE STRUT				DOUBLE STRUT			
	MK	TYPE STEEL	CHORD SIZE	LENGTH		MK	TYPE STEEL	DIA.	LENGTH	MK	TYPE STEEL	DIA.	LENGTH	TYPE STEEL	DIA.	LENGTH	TYPE STEEL	DIA.	LENGTH	TYPE STEEL	DIA.	LENGTH	MK	TYPE STEEL	DIA.	LENGTH	MK	TYPE STEEL	DIA.	LENGTH
C32T17CL-598	9v	A242	2"x1 1/2"x.25"	1'-6"	5'-0 1/4"	10	A242	1.14	5'-5 1/8"	5	A242	1.14	2'-4 7/8"	A242	1.14	4 3/8"	—	—	—	A242	1.14	2'-2 1/2"	-	—	—	—		—	—	—

CHECK DIMENSION FOR TRUSS FAB.

LOCATION OF TRANS. TRUSS				
CL-1	CL-2	CL-3	CL-4	
9'-6 1/2"	22'-10 1/2"	36'-2 1/2"	49'-6 1/2"	4 1/2"

FLOOR TRUSS DETAILS
FOR
WORLD TRADE CENTER - N.Y.C.
FOR
THE PORT OF NEW YORK AUTHORITY

FLOOR TRUSS C32T17CL (SEE NOTE 2) x 59'-8"
WORLD TRADE CENTER TOWERS A & B

FABRICATION BY: LACLEDE STEEL COMPANY

FABRICATED AT MADISON, ILLINOIS		DESIGN DRAWING NO. 7-AB1-18	PLATE
APPROVED FOR FABRICATION FOR P.O.N.Y.A. James White	DATE 4/1/69	DRAWN BY: adc DATE MAR 28 1969	
APPROVED FOR FABRICATION BY: FOR FABRICATOR	DATE	CHECKED BY: T.M.CHURA DATE MAR 28, 1969	IN CHARGE PROD. [illegible]
DETAILED BY: A CARL [illegible]		FABRICATION CONT. NO. W.T.C. 221	SHEET ST 21[illegible]

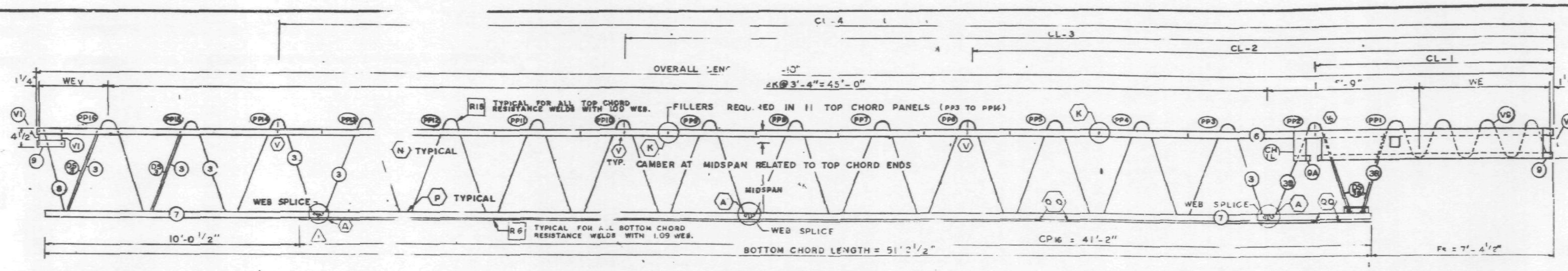

TRUSS ELEVATION

FABRICATION REQUIREMENTS		
	DESIGN	TOLERANCE
CAMBER AT MIDSPAN	2 1/16"	± 3/8"
DESIGN DEPTH	29"	± 1/4"
PANEL K	3'-4"	± 1/4"
OVERALL LENGTH	58'-10"	± 3 "
WEB DEPTH	31 7/8"	± 1/4"

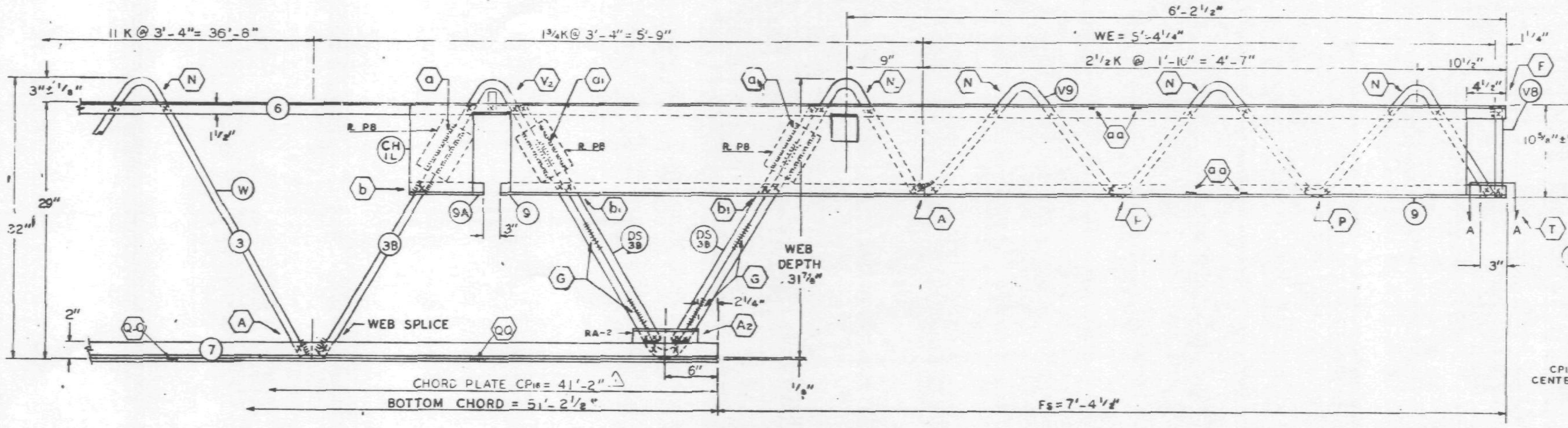

Es END (COLUMN)

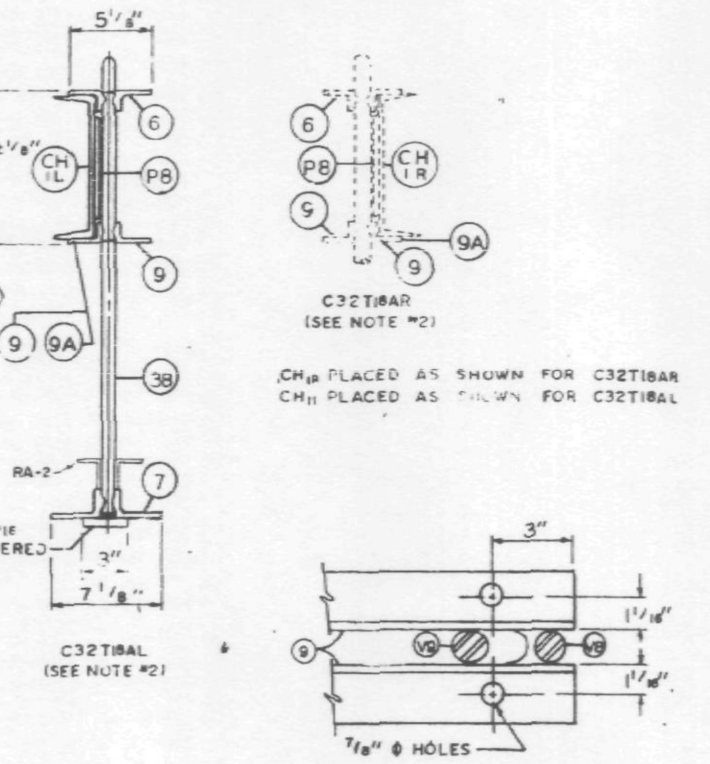

SECTION A-A

ALL PANEL POINTS RESISTANCE WELDED. (x).
ARC WELDS INDICATED AT SHADED AREAS AND AT BOTTOM CHORD WEB SPLICES.
LETTERS IN HEXAGON INDICATE WELD DETAIL, ie., (A).
LETTERS AND NUMBERS IN SQUARES INDICATE RESISTANCE WELD STRENGTH IDENTIFIED IN THE QUALITY CONTROL PROGRAM, ie., [R9].
ALL WELD DETAILS SHOWN ON SHEETS ST290, ST291, ST292 & ST293.
ALL CHANNEL DETAILS SHOWN ON SHEET ST407.
CHORD PLATE DETAILS SHOWN ON SHEET ST283.
SEE SHEET ST295 FOR VI DETAIL.

NOTE 2

ALL DETAILS & ELEVATIONS SHOWN FOR C32T18AL TRUSSES ARE APPLICABLE TO C32T18AR TRUSSES WITH CHANNEL CH1R AND BEARING ANGLE 9A PLACED ON OPP. HAND AS SHOWN.

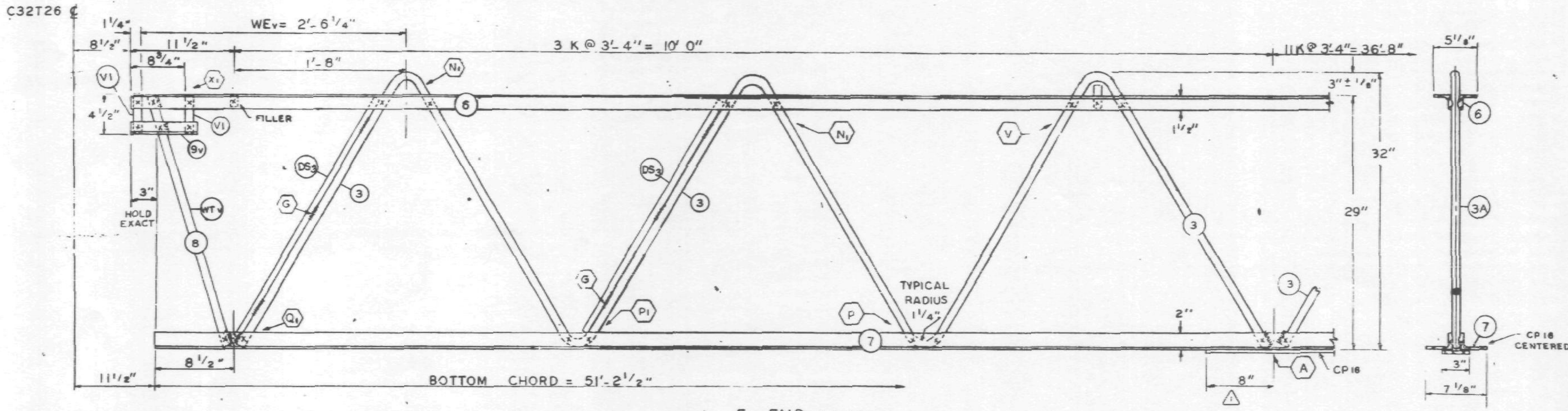

El END (CORE)

NO	DATE	REVISION	BY
1	10-31-68	CP16	L.W.H

REF. DRWG.

7-AB1-17	8-15-68
7-AB1-54	8-15-68
7-AB1-53 & 55	7-22-68
7-AB3-2	1-3-68
7-AB3-24	8-15-68
7-AB4-17 & 17.2	8-15-68
SA-124	8-1-68
7-AB4-13	8-15-68

PAINT
LACLEDE ELECTROCOAT
RED NO. 10001

TRUSS DESIGNATION	TOP CHORD TWO ANGLES				BOTTOM CHORD TWO ANGLES				MAIN WEB "W"					FILLER		"M" C/C HOLES	CHORD PLATE (1)				CONNECTION FILLERS			CHANNEL PLATES					REINFORCING ANGLES (2 REQ'D)				TRUSS DATA
	MK	TYPE STEEL	CHORD SIZE	LENGTH	MK	TYPE STEEL	CHORD SIZE	LENGTH	MK	TYPE STEEL	DIA.	LENGTH	NO. OF K	NO.	DIA.		MK	TYPE STEEL	SIZE	LENGTH	NO	DIA	LENGTH	MK	TYPE STEEL	PCS.	SIZE	LENGTH	MK	TYPE STEEL	SIZE	LENGTH	
C32T18AL-5810	6	A242	2"x1 1/2"x.31	58'-10"	7	A36	3"x2"x.33"	51'-2 1/2"	3	A36	1.09	6'-2 1/2"	14 K @ 3'-4" = 46'-8"	12	1.09"		CP16	A36	3"x.25	41'-2"	4	1.09	3"	P8	A36	3	4 1/2"x.39	5 1/2"	RA-2	A36	3"x2"x.33"	7 1/2"	
									3B	A242	1.14	10'-7 5/8"	1 3/4 K @ 3'-4" = 5'-9"																				

COLUMN END

Es END TRUSS DESIGNATION	BEARING ANGLES					WE	DOUBLE STRUT				CHORD PLATE				END STIFFENER MK. V8			END STIFFENER MK. V9			END STIFFENER MK. V10			CHANNEL			
	MK.	TYPE STEEL	CHORD SIZE	PCS.	LENGTH		MK.	TYPE STEEL	DIA	LENGTH (2 REQ'D)	MK.	TYPE STEEL	SIZE	LENGTH	TYPE STEEL	DIA.	LENGTH	TYPE STEEL	DIA.	LENGTH	TYPE STEEL	DIA.	LENGTH	MK.	TYPE STEEL	CHANNEL SIZE	LENGTH
C32T18AL-5810	9	A242	2"x1 1/2"x.25"	2	9'-5"	5'-4 1/4	DS3	A242	1.14	2'-6 3/4"	–	–	—	—	A242	1.14	10 1/2"	A242	1.14	8'-3 7/8"	—	—	—	CH1L	A36	10 □ 30	10'-0"
	9A	A242	2"x1 1/2"x.25"	1	8 1/2"																			CH1R	A36	10 □ 30	10'-0"

CORE END

El END TRUSS DESIGNATION	BEARING ANGLES				WEv	DIAGONAL "Tv" STRUT				VERTICAL "STv" STRUT				END STIFFENER (2 REQ'D) MK. V1			END STIFFENER MK. V2			END STIFFENER MK. V4			DOUBLE STRUT (2 REQ'D)				DOUBLE STRUT			
	MK.	TYPE STEEL	CHORD SIZE	LENGTH		MK.	TYPE STEEL	DIA.	LENGTH	MK.	TYPE STEEL	DIA.	LENGTH	TYPE STEEL	DIA.	LENGTH	TYPE STEEL	DIA.	LENGTH	TYPE STEEL	DIA.	LENGTH	MK.	TYPE STEEL	DIA.	LENGTH	MK.	TYPE STEEL	DIA.	LENGTH
C32T18AL-5810	9v	A242	2"x1 1/2"x.25	10"	2'-6 1/4"	8	A36	1.09	2'-5 3/4"	–	—	—	—	A36	1.09	4 3/8"	—	—	—	—	—	—	DS3	A242	.75	2'-6 3/4"	—	—	—	—

CHECK DIMENSION FOR TRUSS FAB.

LOCATION OF TRANS. TRUSS				
CL-1	CL-2	CL-3	CL-4	Fs
9'-6 1/2"	22'-10 1/2"	36'-2 1/2"	49'-6 1/2"	7'-4 1/2"

FLOOR TRUSS DETAILS
FOR
WORLD TRADE CENTER - N.Y.C.
FOR
THE PORT OF NEW YORK AUTHORITY

FLOOR TRUSS C32T18AL (SEE NOTE 2) x 58'-10"
WORLD TRADE CENTER TOWERS A & B

FABRICATION BY LACLEDE STEEL COMPANY

FABRICATED AT MADISON, ILLINOIS		DESIGN DRAWING NO. 7-AB1-17	PLATE
APPROVED FOR FABRICATION BY: FOR P.O.N.Y.A.	DATE 11/7/68	DRAWN BY gdc DATE OCT. 8, 1968	
APPROVED FOR FABRICATION BY FOR FABRICATOR	DATE	CHECKED BY T.M. CHURA DATE OCT. 10, 1968	IN CHARGE OF PROD. DEV.
DETAILED BY A. CARL WEBER		FABRICATION CONT. NO W.T.C. 221	SHEET NO. ST 218AL

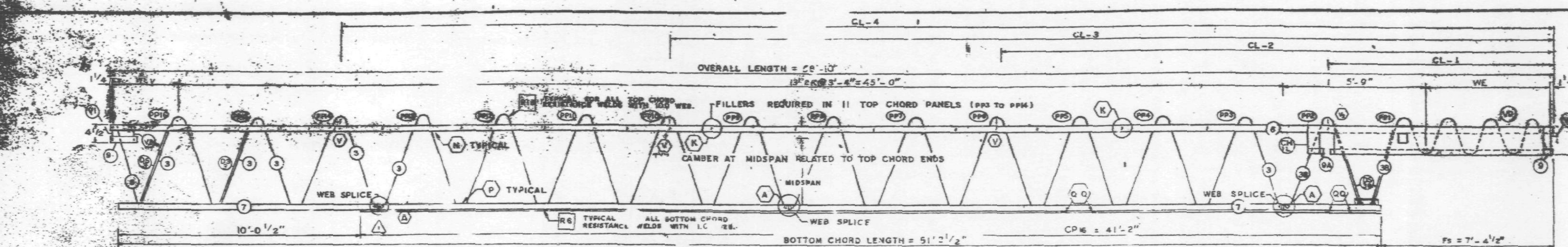

EL END (CORE)

TRUSS ELEVATION

Es END (COLUMN)

ALL PANEL POINTS RESISTANCE WELDED. (x).
ARC WELDS INDICATED AT SHADED AREAS
AND AT BOTTOM CHORD WEB SPLICES. (▮▮▮).
LETTERS IN HEXAGON INDICATE WELD DETAIL, ie., ⟨A⟩.
LETTERS AND NUMBERS IN SQUARES INDICATE
RESISTANCE WELD STRENGTH IDENTIFIED IN THE
QUALITY CONTROL PROGRAM, ie., [R9].
ALL WELD DETAILS SHOWN ON SHEETS ST290, ST291,
ST292 & ST293.
ALL CHANNEL DETAILS SHOWN ON SHEET ST 407.
CHORD PLATE DETAILS SHOWN ON SHEET ST 283.
SEE SHEET ST 295 FOR V1 DETAIL.

NOTE 2

ALL DETAILS & ELEVATIONS SHOWN FOR C32T18-L (2) TRUSSES ARE APPLICABLE TO C32T18-R TRUSSES WITH CHANNEL CH1R AND BEARING ANGLE 9A PLACED ON OPP. HAND AS SHOWN.

FABRICATION REQUIREMENTS	DESIGN	TOLERANCE
CAMBER AT MIDSPAN	2 1/18"	± 3 [illegible]
DESIGN DEPTH	29"	± 1/4"
PANEL K	3'-4"	± 1 [illegible]
OVERALL LENGTH	58'-10"	± [illegible]
WEB DEPTH	31 7	± 1/[illegible]

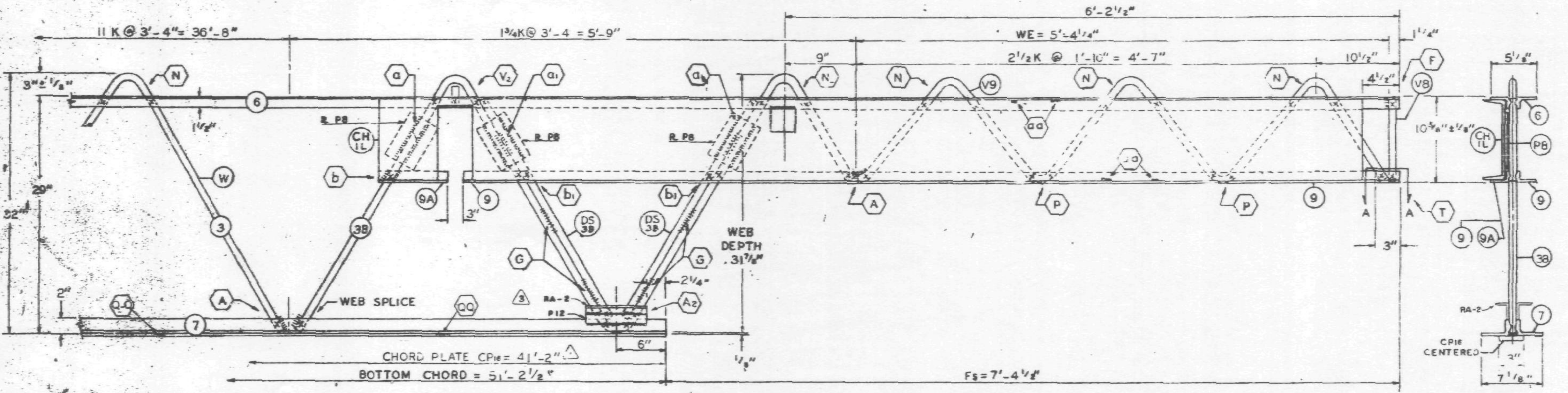

Es END (COLUMN)

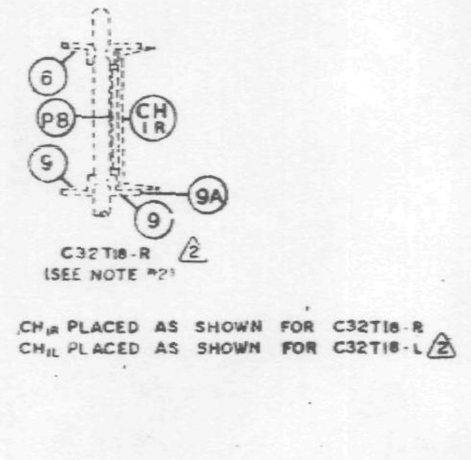

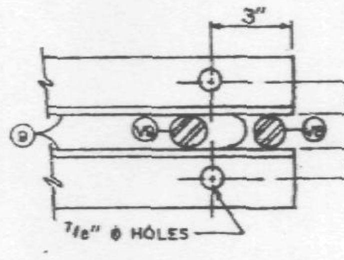

SECTION A-A

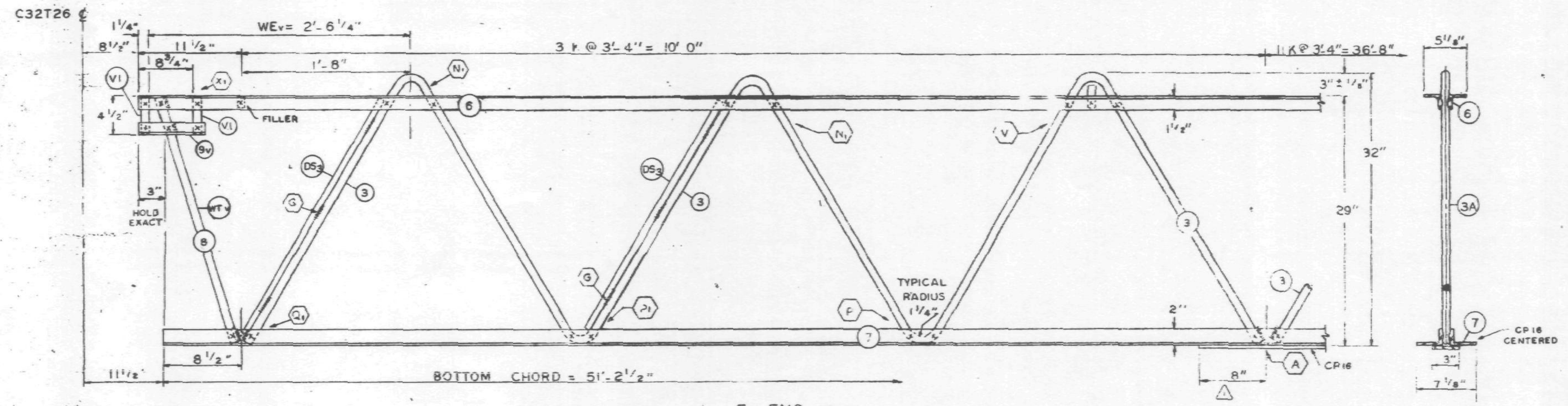

EL END (CORE)

NO	DATE	REVISION	BY
3	12-10-68	AS NOTED	G.D.G.
2	11-7-68	AS NOTED	G.D.G.
1	10-31-68	CP16	L.W.H

(3) REF. DRWG.

7-AB3-17	10-4-68
7-AB1-54	11-25-68
7-AB1-53	7-22-68
7-AB2-2	1-3-68
7-AB3-24	8-15-68
7-AB4-17 & 17.2	10-4-68
SA-124	10-11-68
7-AB4-13	7-22-68
7-AB1-55	10-15-68

PAINT

LACLEDE ELECTROCOAT
RED NO. 10001

TRUSS DESIGNATION (2)	TOP CHORD TWO ANGLES MK.	TYPE STEEL	CHORD SIZE	LENGTH	BOTTOM CHORD TWO ANGLES MK.	TYPE STEEL	CHORD SIZE	LENGTH	MAIN WEB "W" MK.	TYPE STEEL	DIA.	LENGTH	NO. OF K	FILLER NO.	DIA.	"M" C/C HOLES	CHORD PLATE (1) MK.	TYPE STEEL	SIZE	LENGTH	CONNECTION FILLERS NO	DIA	LENGTH	CHANNEL PLATES MK	TYPE STEEL	PCS.	SIZE	LENGTH	REINFORCING ANGLES (3) MK.	TYPE STEEL	ANGLE SIZE	(2 REQ'D) LENGTH	SPECIAL PLATES MK.	TYPE STEEL	SIZE	(2 REQ'D) LENGTH
C32T18-L-5810	6	A242	2"x1 1/2"x.31	58'-10"	7	A36	3"x2"x.33"	51'-2 1/2"	3	A36	1.09	51'-2 1/2"	14 K @ 3'-4" = 46'-8"	12	1.09"		CP16	A36	3"x.25	41'-2"	4	1.09	3"	P8	A36	3	4 1/2"x.39	5 1/2"	RA2	A36	3"x2"x.33"	7 1/2"	P12	A36	1"x3/8"	7 1/2"
									38	A242	1.14	10'-7 3/8"	1 3/4K @ 3'-4" = 5'-9"																							

CHECK DIMENSION FOR TRUSS FAB.

LOCATION OF TRANS. TRUSS				
CL-1	CL-2	CL-3	CL-4	Fs
9'-6 1/2"	22'-10 1/2"	36'-2 1/2"	49'-6 1/2"	7'-4 1/2"

COLUMN END

Es END TRUSS DESIGNATION (2)	BEARING ANGLES MK.	TYPE STEEL	CHORD SIZE	PCS.	LENGTH	WE	DOUBLE STRUT MK.	TYPE STEEL	DIA	LENGTH (2 REQ'D)	CHORD PLATE MK.	TYPE STEEL	SIZE	LENGTH	END STIFFENER MK. V8 TYPE STEEL	DIA.	LENGTH	MK. V9 TYPE STEEL	DIA.	LENGTH	MK. V10 TYPE STEEL	DIA.	LENGTH	CHANNEL MK.	TYPE STEEL	CHANNEL SIZE	LENGTH
C32T18-L-5810	9	A242	2"x1 1/2"x.25"	2	9'-5"	5'-4 1/4	DS3B	A242	1.14	2'-6 3/4"	—	—	—	—	A242	1.14	10 1/2"	A242	1.14	8'-3 7/8"	—	—	—	CH1L	A36	10 ⊏ 30	10'-0"
	9A	A242	2"x1 1/2"x.25"	1	8 1/2"																			CH1R	A36	10 ⊏ 30	10'-0"

CORE END

EL END TRUSS DESIGNATION (2)	BEARING ANGLES MK.	TYPE STEEL	CHORD SIZE	LENGTH	WEv	DIAGONAL "Tv" STRUT MK.	TYPE STEEL	DIA.	LENGTH	VERTICAL "STv" STRUT MK.	TYPE STEEL	DIA.	LENGTH	STIFFENER (2 REQ'D) MK. V1 TYPE STEEL	DIA.	LENGTH	MK. V2 TYPE STEEL	DIA.	LENGTH	MK. V4 TYPE STEEL	DIA.	LENGTH	DOUBLE STRUT (2 REQ'D) MK.	TYPE STEEL	DIA.	LENGTH	DOUBLE STRUT MK.	TYPE STEEL	DIA.	LENGTH
C32T18-L-5810	9v	A242	2"x1 1/2"x.25	10"	2'-6 1/4	8	A36	.09	2'-5 3/[illegible]	—	—	—	—	A36	1.09	4 3/8"	—	—	—	—	—	—	DS3	A242	.75	2'-6 3/4"	—	—	—	—

FLOOR TRUSS DETAILS
FOR
WORLD TRADE CENTER - N.Y.C.
FOR
THE PORT OF NEW YORK AUTHORITY

FLOOR TRUSS C32T18-L (2) (SEE NOTE 2) x 58'-10"

WORLD TRADE CENTER TOWERS A & B

FABRICATION BY: LACLEDE STEEL COMPANY

FABRICATED AT MADISON, ILLINOIS		DESIGN DRAWING NO. 7-AB1-17	PLATE
APPROVED FOR FABRICATION BY: James White FOR P.O.N.Y.A.	DATE 12/16/68	DRAWN BY: gdc DATE OCT. 3, 1968	
APPROVED FOR FABRICATION BY: FOR FABRICATOR LACLEDE STEEL CO.	DATE	CHECKED BY: T.M. CHURA DATE OCT. 10, 1968	IN CHARGE OF PROD. DEV.
DETAILED BY: A. CARL WEBER		FABRICATION CONT. NO. W.T.C. 221	SHEET NO. ST-218 L(3)

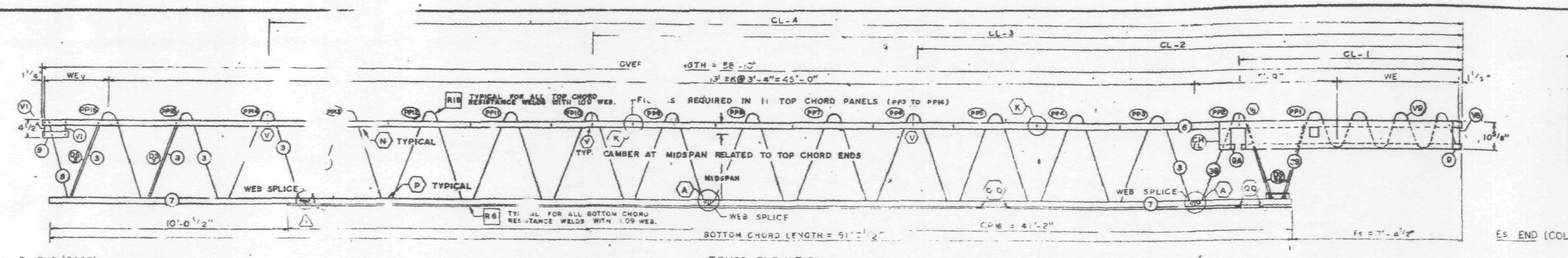

EL END (CORE)

TRUSS ELEVATION

ES END (COLUMN)

. FABRICATION REQUIREMENTS	DESIGN	TOLERANCE
CAMBER AT MIDSPAN	2 1/16"	± 3/8"
DESIGN DEPTH	29"	± 1/4"
PANEL K	3'-4"	± 1/4"
OVERALL LENGTH	58'-10"	± 3/8"
WEB DEPTH	31 7/8"	± 1/4"

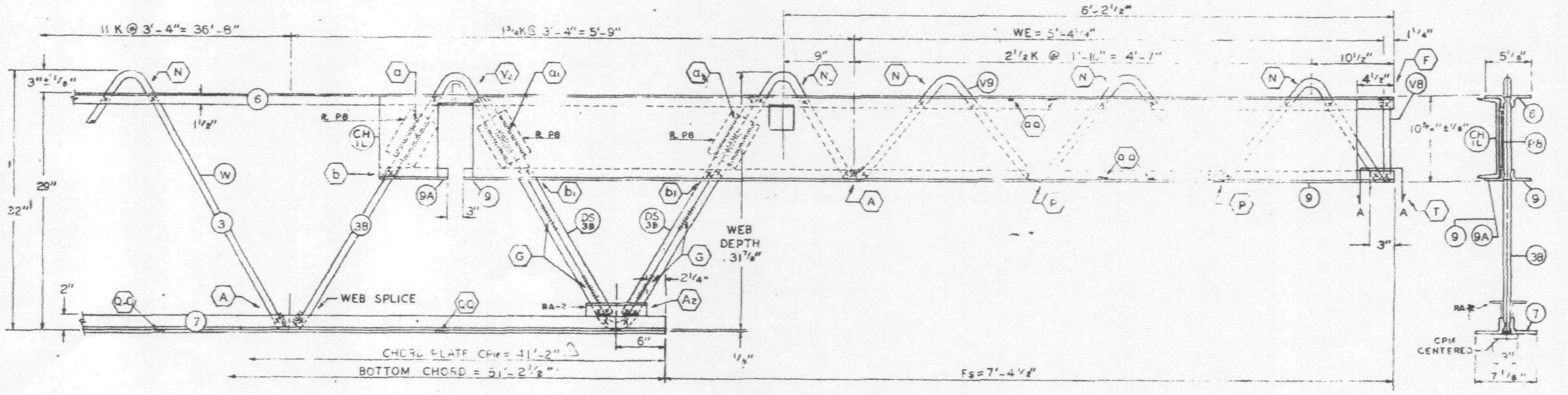

ES END (COLUMN)

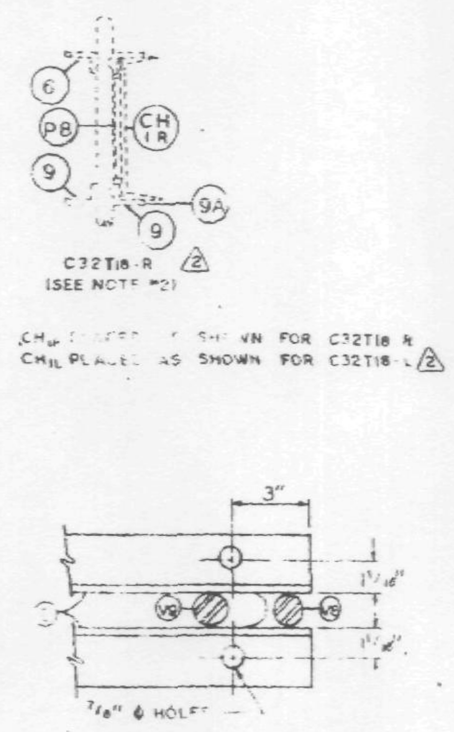

ALL PANEL POINTS RESISTANCE WELDED. (x).
ARC WELDS INDICATED AT SHADED AREAS AND AT BOTTOM CHORD WEB SPLICES.
LETTERS IN HEXAGON INDICATE WELD DETAIL, ie., (A).
LETTERS AND NUMBERS IN SQUARES INDICATE RESISTANCE WELD STRENGTH IDENTIFIED IN THE QUALITY CONTROL PROGRAM, ie., [R0].
ALL WELD DETAILS SHOWN ON SHEETS ST290, ST291, ST292 & ST293.
ALL CHANNEL DETAILS SHOWN ON SHEET ST 407.
CHORD PLATE DETAILS SHOWN ON SHEET ST 283.
SEE SHEET ST 295 FOR V1 DETAIL.

NOTE 2

ALL DETAILS & ELEVATIONS SHOWN FOR C32T18-L TRUSSES ARE APPLICABLE TO C32T18-R TRUSSES WITH CHANNEL CHIR AND BEARING ANGLE 9A PLACED ON OPP. HAND AS SHOWN. (2)

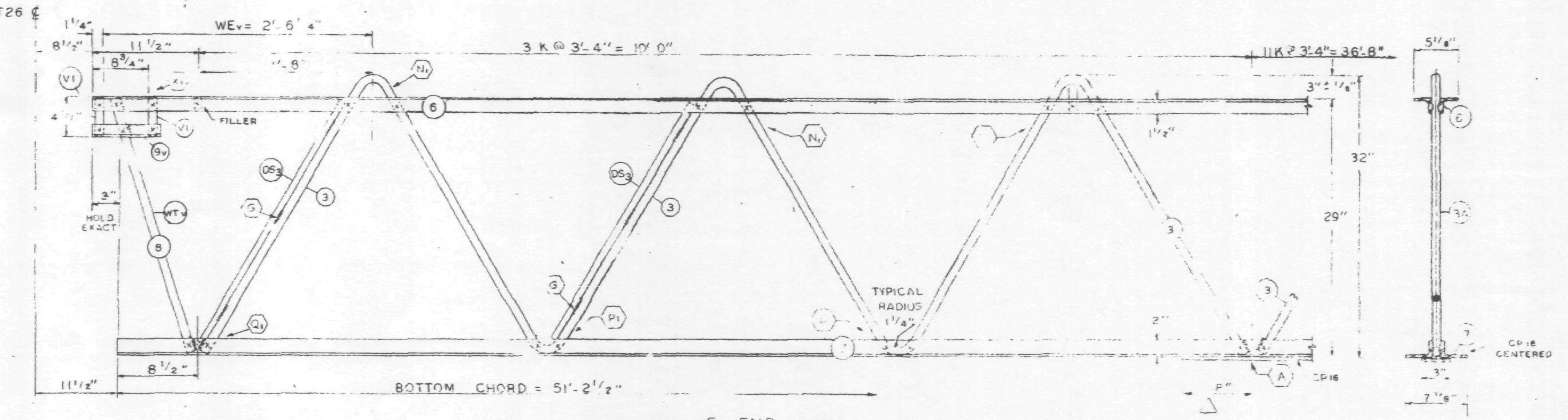

EL END (CORE)

NO	DATE	REVISION	BY
(2)	11-7-68	AS NOTED	G.D.C.
(1)	10-31-68	CP16	L.W.H.

(2) REF. DRWG.

7-AB1-17	10-4-68
7-AB1-54	10-4-68
7-AB1-53	7-22-68
7-AB3-2	1-3-68
7-AB3-24	8-15-68
7-AB4-17 & 17.2	10-4-68
SA-124	10-11-68
7-AB4-13	7-22-68
7-AB1-55	10-15-68

PAINT
LACLEDE ELECTROCOAT
RED No. 10001

TRUSS DESIGNATION (2)	TOP CHORD TWO ANGLES MK.	TYPE STEEL	CHORD SIZE	LENGTH	BOTTOM CHORD TWO ANGLES MK.	TYPE STEEL	CHORD SIZE	LENGTH	MAIN WEB "W" MK.	TYPE STEEL	DIA.	LENGTH	NO. OF K	FILLER NO.	DIA.	"M" C/C HOLES	CHORD PLATES (1) MK.	TYPE STEEL	SIZE	LENGTH	[illegible] MK.	DIA.	LENGTH	CHANNEL PLATES MK.	TYPE STEEL	PCS.	SIZE	LENGTH	REINFORCING ANGLES 2 REQ'D MK.	TYPE STEEL	SIZE	LENGTH	TRUSS DATA
C32T18-L-5810	6	A242	2"x1 1/2"x.31	58'-10"	7	A36	3"x2"x.33"	51'-2 1/2"	3 3B	A36 A242	1.09 1.14	6'-8 1/2" 10'-7 5/8"	14 K @ 3'-4" = 46'-8" 3.4K @ 3'-4" = 5'-9"	12	1.09"		CP16	A36	5"x2"	41'-2"	4	1.09	3"	P6	A36	3	4 1/2"x39	5'-2"	RA-2	A36	3"x2"x.33"	7 1/2"	

COLUMN END

Es END TRUSS DESIGNATION (2)	BEARING ANGLES MK.	TYPE STEEL	CHORD SIZE	PCS.	LENGTH	WE	DOUBLE STRUT MK.	TYPE STEEL	DIA.	LENGTH (2 REQ'D)	CHORD PLATE MK.	TYPE STEEL	SIZE	LENGTH	END STIFFENER MK. V8 TYPE STEEL	DIA.	LENGTH	MK. V9 TYPE STEEL	DIA.	LENGTH	MK. V10 TYPE STEEL	DIA.	LENGTH	CHANNEL MK.	TYPE STEEL	CHANNEL SIZE	LENGTH
C32T18-L-5810	9 9A	A242 A242	2"x1 1/2"x.25" 2"x1 1/2"x.25"	2 1	9'-5" 8 1/2"	5'-4 1/4"	DS 3B	A242	1.14	2'-6 3/4"	—	—	—	—	A242	1.14	10 1/2"	A242	1.14	8'-3 7/8"	—	—	—	CHIL CHIR	A36 A36	10 [30 10 [30	10'-0" 10'-0"

CHECK DIMENSION FOR TRUSS FAB.

LOCATION OF TRANS. TRUSS				
CL-1	CL-2	CL-3	CL-4	Fs
9'-6 1/2"	22'-10 1/2"	36'-2 1/2"	49'-6 1/2"	7'-4 1/2"

CORE END

EL END TRUSS DESIGNATION (2)	BEARING ANGLES MK.	TYPE STEEL	CHORD SIZE	LENGTH	WEv	DIAGONAL "Tv" STRUT MK.	TYPE STEEL	DIA.	LENGTH	VERTICAL "STv" STRUT MK.	TYPE STEEL	DIA.	LENGTH	END STIFFENER (2 REQ'D) MK. V1 TYPE STEEL	DIA.	LENGTH	MK. V2 TYPE STEEL	DIA.	LENGTH	MK. V4 TYPE STEEL	DIA.	LENGTH	DOUBLE STRUT (2 REQ'D) MK.	TYPE STEEL	DIA.	LENGTH	DOUBLE STRUT MK.	TYPE STEEL	DIA.	LENGTH
C32T18-L-5810	9v	A242	2"x1 1/2"x.25	10"	2'-6 1/4"	8	A36	1.09	2'-3 3/4"	—	—	—	—	A36	1.09	4 3/8"	—	—	—	—	—	—	DS 5	A242	.75	2'-6 3/4"	—	—	—	—

FLOOR TRUSS DETAILS
FOR
WORLD TRADE CENTER - N.Y.C.
FOR
THE PORT OF NEW YORK AUTHORITY

FLOOR TRUSS C32T18-L (2) (SEE NOTE 2) x 58'-10"
WORLD TRADE CENTER TOWERS A & B

FABRICATION BY LACLEDE STEEL COMPANY			
FABRICATED AT MADISON, ILLINOIS		DESIGN DRAWING NO. 7-AB1-17	PLATE
APPROVED FOR FABRICATION BY: ______ FOR P.O.N.Y.A.	DATE 11/18/68	DRAWN BY gdc DATE OCT. 8, 1968	
APPROVED FOR FABRICATION BY ______ FOR FABRICATOR	DATE	CHECKED BY T.M. CHURA DATE OCT. 10, 1968	IN CHARGE OF PROD. DEV.
DETAILED BY: A CARL WEBER		FABRICATION CONT. NO W.T.C. 221	SHEET NO. ST 218 L (2)

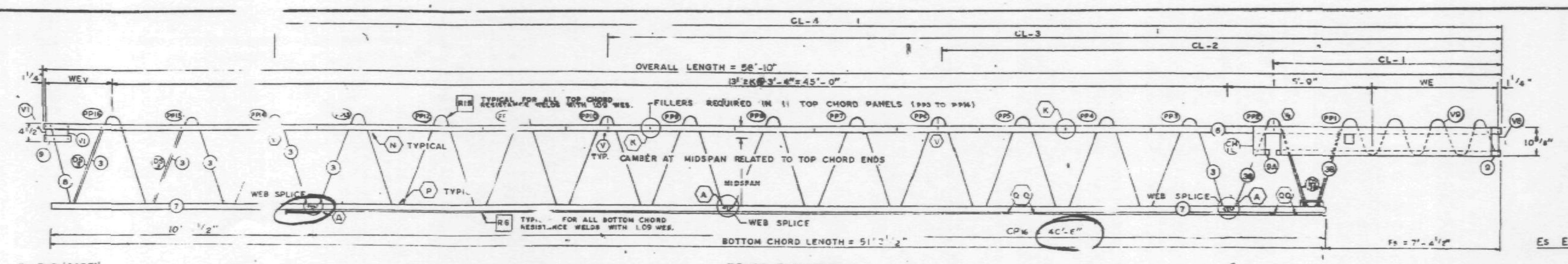

TRUSS ELEVATION

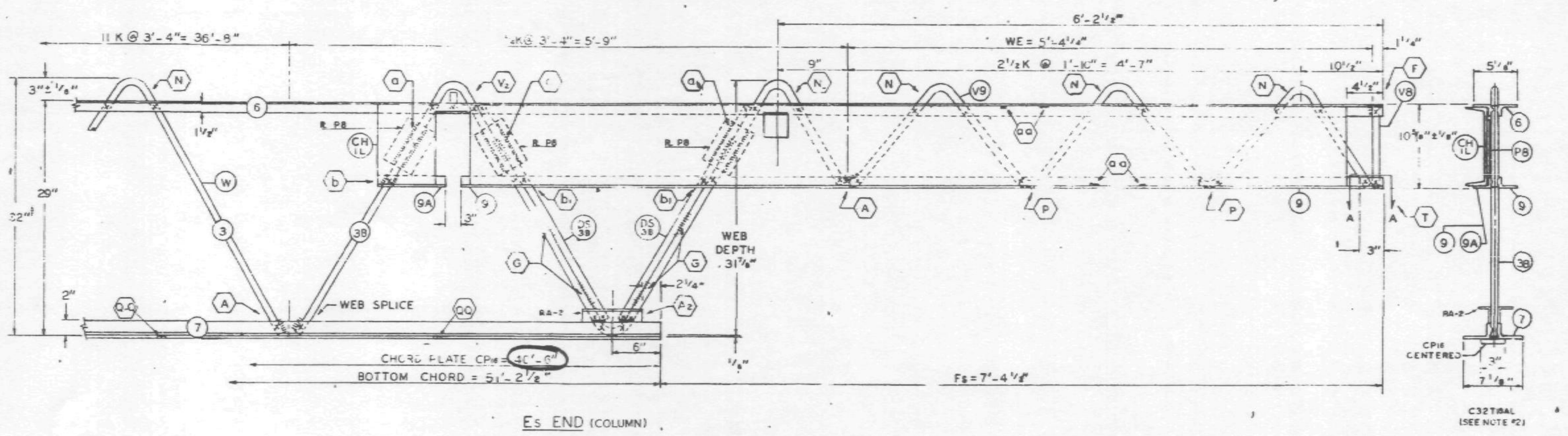

Es END (COLUMN)

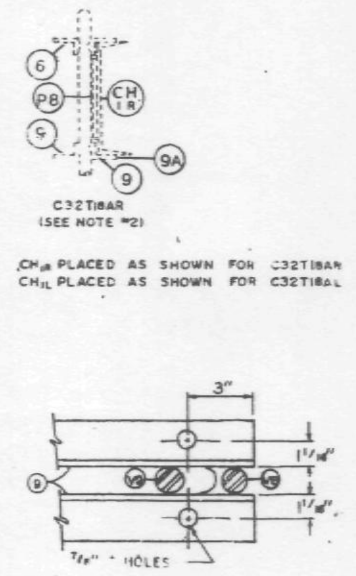

SECTION A-A

FABRICATION REQUIREMENTS

	DESIGN	TOLERANCE
CAMBER AT MIDSPAN	2 1/16"	± 3/8"
DESIGN DEPTH	29"	± 1/4"
PANEL K	3'-4"	± 1/4"
OVERALL LENGTH	58'-10"	± 3/8"
WEB DEPTH	31 7/8"	± 1/4"

ALL PANEL POINTS RESISTANCE WELDED. (x ARC WELDS INDICATED AT SHADED AREAS AND AT BOTTOM CHORD WEB SPLICES.
LETTERS IN HEXAGON INDICATE WELD DETAIL, ie.
LETTERS AND NUMBERS IN SQUARES INDICATE RESISTANCE WELD STRENGTH IDENTIFIED IN THE QUALITY CONTROL PROGRAM. ie., RO
ALL WELD DETAILS SHOWN ON SHEETS ST290, ST291, ST292 & ST 293.
ALL CHANNEL DETAILS SHOWN ON SHEET ST 407.
CHORD PLATE DETAILS SHOWN ON SHEET ST 283.
SEE SHEET ST 295 FOR VI DETAIL.

NOTE 2

DETAILS & ELEVATIONS SHOWN FOR C32T1BAL TRUSSES ARE APPLICABLE TO C32T1BAR TRUSSES WITH CHANNEL CH1R AND BEARING ANGLE 9A PLACED ON OPP. HAND AS SHOWN.

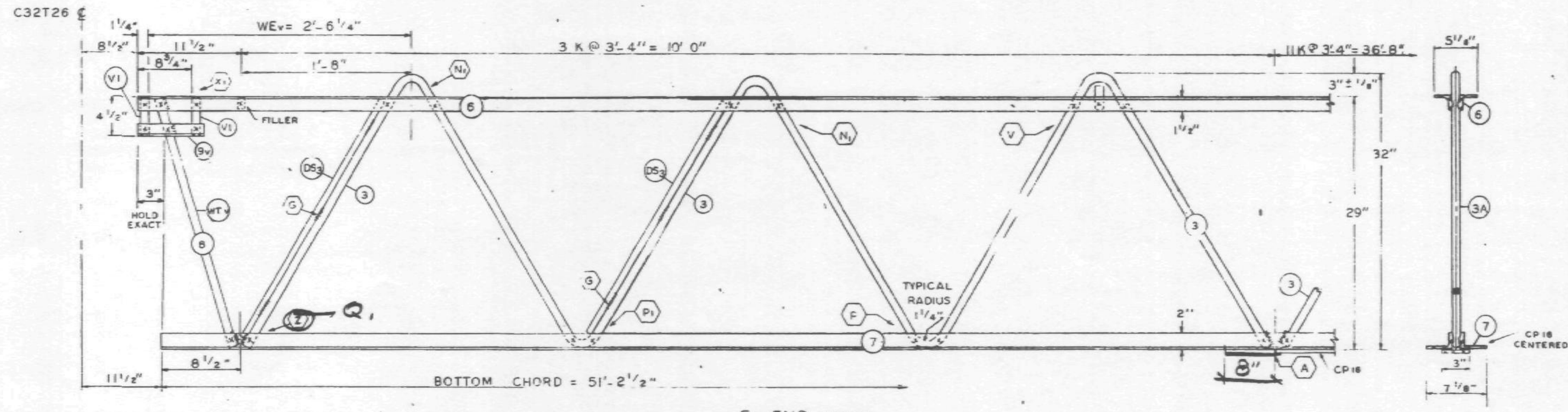

EL END (CORE)

NO	DATE	REVISION	BY

REF. DRWG.		
	7-AB1-17	8-15-68
	7-AB1-54	8-15-68
	7-AB1-53 & 55	7-22-68
	7-AB3-2	1-3-68
	7-AB3-24	8-15-68
	7-AB4-17 & 17.2	8-15-68
	SA-124	8-1-68
	7-AB4-13	8-15-68

10/29/68 SK

PAINT

LACLEDE ELECTROCOAT
RED NO. 10001

TRUSS DESIGNATION	TOP CHORD TWO ANGLES				BOTTOM CHORD TWO ANGLES				MAIN WEB "W"					FILLER		"M" C/C HOLES	CHORD PLATE				CONNECTION FILLERS			CHANNEL PLATES					REINFORCING ANGLES (2 REQ'D)				TRUSS DATA	
	MK.	TYPE STEEL	CHORD SIZE	LENGTH	MK.	TYPE STEEL	CHORD SIZE	LENGTH	MK.	TYPE STEEL	DIA.	LENGTH	NO. OF K	NO.	DIA.		MK.	TYPE STEEL	SIZE	LENGTH	NO	DIA	LENGTH	MK.	TYPE STEEL	PCS.	SIZE	LENGTH	MK.	TYPE STEEL	SIZE	LENGTH		
C32T1BAL-5810	6	A242	2"x1 1/2"x .31	58'-10"	7	A36	3" x 2" x .33"	51'-2 1/2"	3 38	A36 A242	1.09 1.14	15'-2 1/2" 10'-7 5/8"	14 K @ 3'-4" = 46'-8" 3 4K @ 3'-4" = 5'-9"	12	1.09"		CP 16	A36	3"x .25	40'-6"	4	1.09	3"	P8	A36	3	4 1/2"x.39	5 1/2"	RA-2	A36	3"x 2"x .33"	7 1/2"		

COLUMN END

Es END	TRUSS DESIGNATION	BEARING ANGLES					WE	DOUBLE STRUT				CHORD PLATE				END STIFFENER MK. V8			END STIFFENER MK. V9			END STIFFENER MK. V10			CHANNEL			
		MK.	TYPE STEEL	CHORD SIZE	PCS.	LENGTH		MK.	TYPE STEEL	DIA.	LENGTH (2 REQ'D)	MK.	TYPE STEEL	SIZE	LENGTH	TYPE STEEL	DIA.	LENGTH	TYPE STEEL	DIA.	LENGTH	TYPE STEEL	DIA.	LENGTH	MK.	TYPE STEEL	CHANNEL SIZE	LENGTH
	C32T1BAL-5810	9 9A	A242 A242	2"x1 1/2"x.25" 2"x1 1/2"x.25"	2 1	9'-5" 8 1/2"	5'-4 1/4"	DS 1B	A242	1.14	2'-6 3/4"	—	—	—	—	A242	1.14	10 1/2"	A242	1.14	8'-3 7/8"	—	—	—	CH1L CH1R	A36 A36	10 C 30 10 C 30	10'-0" 10'-0"

CHECK DIMENSION FOR TRUSS FAB.

LOCATION OF TRANS. TRUSS				
CL-1	CL-2	CL-3	CL-4	Fs
9'-6 1/2"	22'-10 1/2"	36'-2 1/2"	49'-6 1/2"	7'-4 1/2"

CORE END

EL END	TRUSS DESIGNATION	BEARING ANGLES				WEv	DIAGONAL "Tv" STRUT				VERTICAL "STv" STRUT				END STIFFENER (2 REQ'D) MK. V1			END STIFFENER MK. V2			END STIFFENER MK. V4			DOUBLE STRUT (2 REQ'D)				DOUBLE STRUT			
		MK.	TYPE STEEL	CHORD SIZE	LENGTH		MK.	TYPE STEEL	DIA.	LENGTH	MK.	TYPE STEEL	DIA.	LENGTH	TYPE STEEL	DIA.	LENGTH	TYPE STEEL	DIA.	LENGTH	TYPE STEEL	DIA.	LENGTH	MK.	TYPE STEEL	DIA.	LENGTH	MK.	TYPE STEEL	DIA.	LENGTH
	C32T1BAL-5810	9v	A242	2"x1 1/2"x .25"	10"	2'-6 1/4"	8	A36	1.09	2'-5 3/4"	—	—	—	—	A36	1.09	4 3/8"	—	—	—	—	—	—	DS 3	A242	.75	2'-6 3/4"	—	—	—	—

FLOOR TRUSS DETAILS
FOR
WORLD TRADE CENTER - N.Y.C.
FOR
THE PORT OF NEW YORK AUTHORITY

FLOOR TRUSS C32T1BAL (SEE NOTE 2) x 58'-10"
WORLD TRADE CENTER TOWERS A & B

FABRICATION BY LACLEDE STEEL COMPANY

FABRICATED AT MADISON, ILLINOIS	DESIGN DRAWING NO. 7-AB1-17	PLATE
APPROVED FOR FABRICATION BY: FOR P.O.N.Y.A. DATE	DRAWN BY gdc DATE OCT. 8 1968	
APPROVED FOR FABRICATION BY: FOR FABRICATOR DATE	CHECKED BY T.M. CHURA DATE OCT. 10, 1968	IN CHARGE OF PROJ. DEP.
DETAILED BY: A CARL WEBER	FABRICATION CONT. NO. WTC 221	SHEET NO. ST 218AL

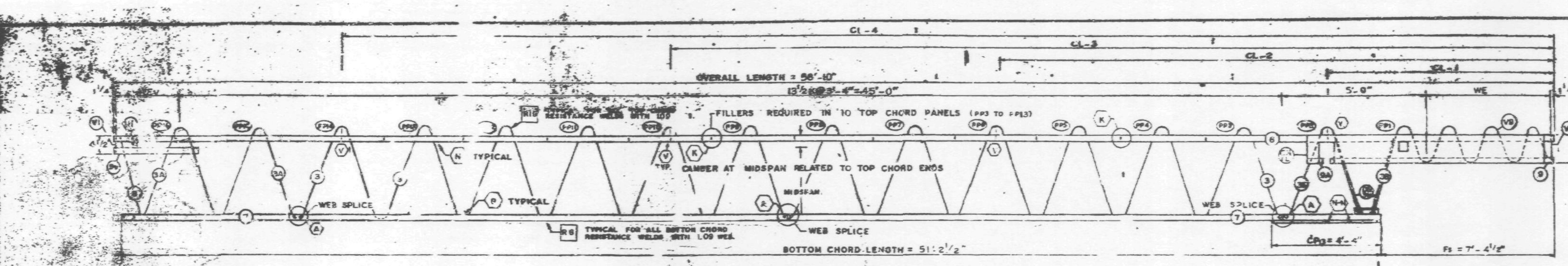

Es END (COLUMN)

TRUSS ELEVATION

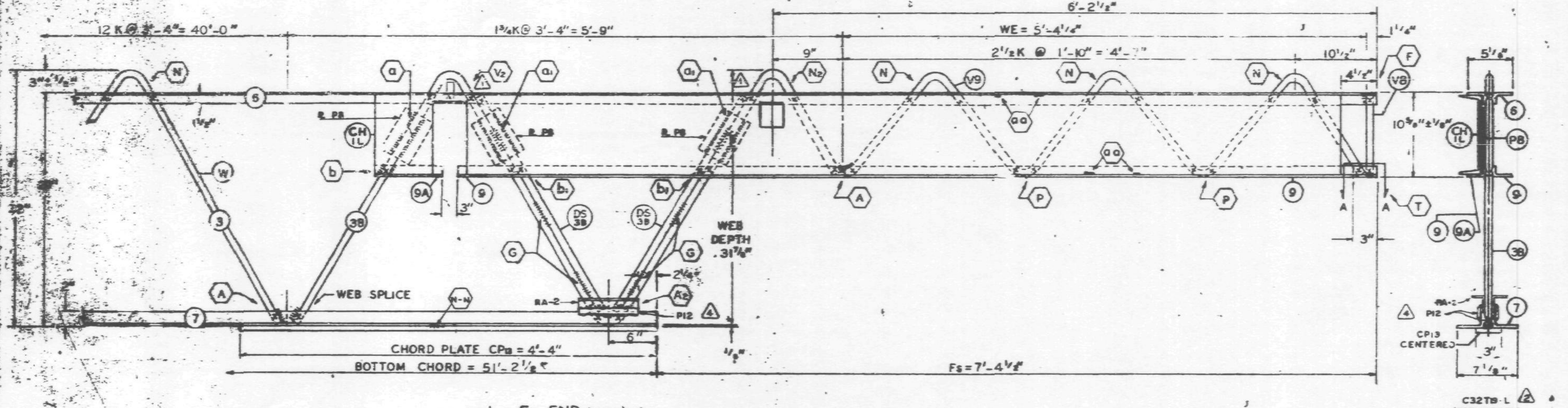

Es END (COLUMN)

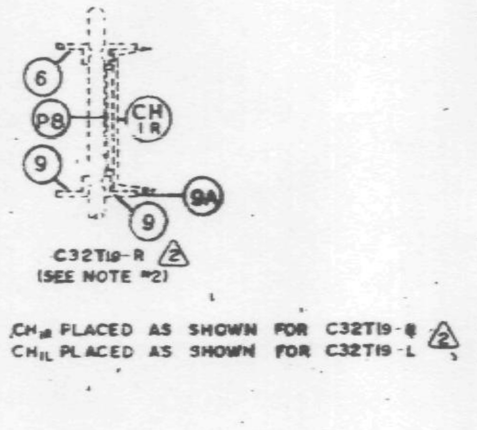

CH_{R} PLACED AS SHOWN FOR C32T19-R
CH_{L} PLACED AS SHOWN FOR C32T19-L

ALL PANEL POINTS RESISTANCE WELDED (A). ARC WELDS INDICATED AT SHADED AREAS AND AT BOTTOM CHORD WEB SPLICES. LETTERS IN HEXAGON INDICATE WELD DETAILS. LETTERS AND NUMBERS IN SQUARES INDICATE RESISTANCE WELD STRENGTH IDENTIFIED IN QUALITY CONTROL PROGRAM, ie., [illegible]
ALL WELD DETAILS SHOWN ON [illegible] ST 292 & ST 293.
ALL CHANNEL DETAILS SHOWN ON SHEET [illegible]
CHORD PLATE DETAILS SHOWN ON SHEET [illegible]
SEE SHEET ST295 FOR VI DETAIL.

NOTE 2

ALL DETAILS & ELEVATIONS SHOWN FOR C32T19-L TRUSSES ARE APPLICABLE TO C32T19-R TRUSSES WITH CHANNEL CHR AND BEARING ANGLE 9A PLACED ON OPP. HAND AS SHOWN.

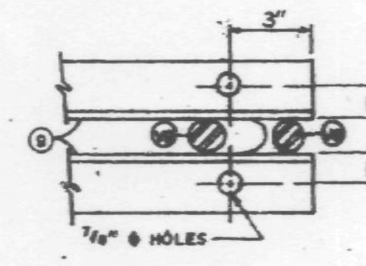

SECTION A-A

NO	DATE	REVISION	BY
4	12-20-68	AS NOTED	
3	12-3-68	AS NOTED	
2	11-7-68	AS NOTED	
1	10-31-68	AS NOTED	

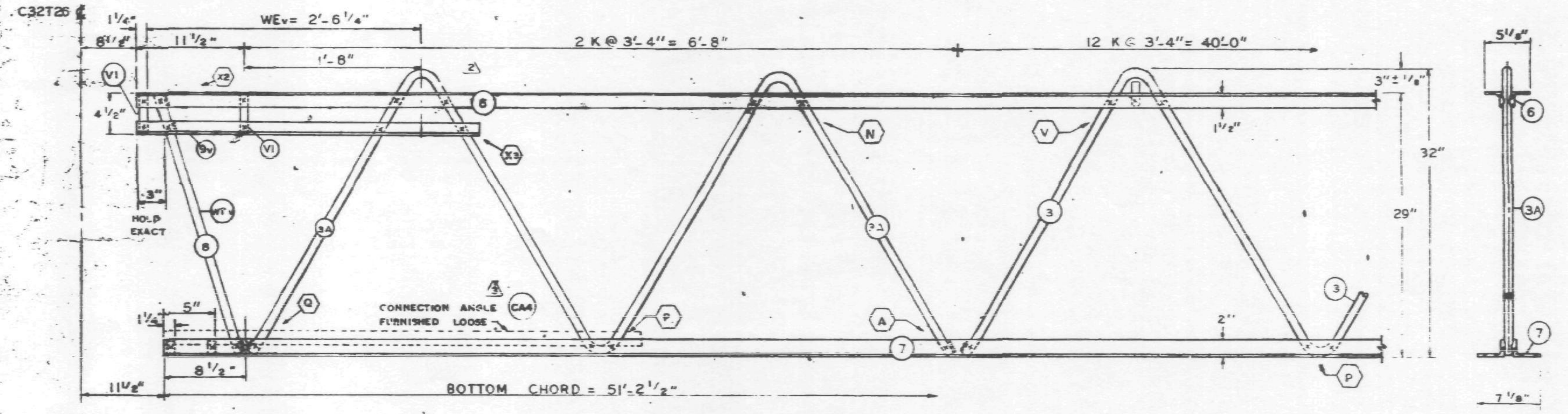

EL END (CORE)

(3) REF. DRWG.

7-AB1-18	10-4-68
7-AB-34	11-25-68
7-AB1-53	7-22-[illegible]
7-AB2-2	1-3-[illegible]
7-AB-34	[illegible]
7-AB4-17 & 17.2	10-4-68
SA-124	10-11-68
7-AB4-11	7-22-[illegible]
7-AB1-55	10-15-68

FABRICATION [illegible]		
CAMBER AT MIDSPAN	1 1[illegible]	± 3/8"
DESIGN DEPTH	29"	± 1/8"
PANEL K	3'-4"	± 1/4"
OVERALL LENGTH	58'-10"	± [illegible]
WEB DEPTH	31 7/8"	± 1/4"

PAINT

LACLEDE ELECTROCOAT
RED NO. 10001

(4)

TRUSS DESIGNATION (2)	TOP CHORD TWO ANGLES MK	TYPE STEEL	CHORD SIZE	LENGTH	BOTTOM CHORD TWO ANGLES MK	TYPE STEEL	CHORD SIZE	LENGTH	MAIN WEB "W" MK	TYPE STEEL	DIA.	LENGTH	NO. OF K	FILLER NO.	DIA.	"M" C/C HOLES
C32T19-L-5810	6	A242	2"x1 1/2"x.31	58'-10"	7	A36	3"x2"x.33"	51'-2 1/2"	3	A36	1.09	74'-9"	12 K @ 3'-4" = 40'-4	12	1.09	—
									3A	A242	1.14	12'-5 1/2"	2 K @ 3'-4" = 6'-8"			
									3B	A242	1.14	10'-7 3/8"	1 3/4 K @ 3'-4" = 5'-9"			

TRUSS DESIGNATION (2)	CHORD PLATE MK.	TYPE STEEL	SIZE	LENGTH	CONNECTION FILLERS NO	DIA	LENGTH	CHANNEL PLATES MK	TYPE STEEL	PCS.	SIZE	LENGTH	REINFORCING ANGLE MK.	TYPE STEEL	ANGLE SIZE	(2 REQ'D) LENGTH	SPECIAL PLATES MK.	TYPE STEEL	SIZE	(2 REQ'D) LENGTH
C32T19-L-5810	—	—	—	—	4	1.09	3"	P8	A36	3	4 1/2"x.39	5 1/2"	RA2	A36	3"x2"x.33"	[illegible] 2"	P12	A36	1"x3/8"	7 1/2"

COLUMN END

Es END TRUSS DESIGNATION (2)	BEARING ANGLES MK	TYPE STEEL	CHORD SIZE	PCS.	LENGTH	WE	DOUBLE STRUT MK.	TYPE STEEL	DIA	LENGTH (2 REQ'D)	CHORD PLATE MK.	TYPE STEEL	SIZE	LENGTH
C32T19-L 5810	9	A242	2"x1 1/2"x.25	2	9'-5"	5'-4 1/4"	DS 9	A242	1.14	2'-6 3/4"	CP 13	A36	3"x.25"	4'-4"
	9A	A242	2"x1 1/2"x.25	1	[illegible] 1/2"									

Es END TRUSS DESIGNATION (2)	END STIFFENER MK. V8 TYPE STEEL	DIA.	LENGTH	TYPE STEEL	DIA.	LENGTH	MK. V10 TYPE STEEL	DIA.	LENGTH	CHANNEL MK.	TYPE STEEL	CHANNEL SIZE	LENGTH
C32T19-L 5810	A242	1.14	10 1/2"	A242	1.14	8'-3 7/[illegible]	—	—	—	CHL	A36	10 x 30	10'-0"
										CHR	A36	10 x 30	10'-0"

CHECK DIMENSION FOR TRUSS FAB.

LOCATION OF TRANS. TRUSS				
CL-1	CL-2	CL-3	CL-4	Fs
9'-6 1/2"	22'-10 1/2"	36'-2 1/2"	49'-6 1/2"	7'-4 1/2"

CORE END

EL END TRUSS DESIGNATION (2)	BEARING ANGLES MK	TYPE STEEL	CHORD SIZE	LENGTH	WEv	DIAGONAL "Tv" STRUT MK.	TYPE STEEL	DIA.	LENGTH	VERTICAL "STv" STRUT MK.	TYPE STEEL	DIA.	LENGTH
C32T19-L-5810	9v	A242	2"x1 1/2"x.31	3'-2"	2'-6 1/4"	8	A242	1.14	2'-5 3/4"	—	—	—	—

EL END TRUSS DESIGNATION (2)	END STIFFENER (2 REQ'D) MK. V1 TYPE STEEL	DIA.	LENGTH	MK. V2 TYPE STEEL	DIA.	LENGTH	MK. V4 TYPE STEEL	DIA.	LENGTH	DOUBLE STRUT MK.	TYPE STEEL	DIA.	LENGTH	DOUBLE STRUT MK.	TYPE STEEL	DIA.	LENGTH	(FURNISH LOOSE) CONNECTION ANGLE NO.	MK.	TYPE STEEL	ANGLE SIZE	LENGTH
C32T19-L-5810	A242	1.14	4 3/8"	—	—	—	—	—	—	—	—	—	—	—	—	—	—	2	CA-4 (3)	A242	2"x1 1/2"x.37	4'-4"

FLOOR TRUSS DETAILS
FOR
WORLD TRADE CENTER - N.Y.C.
FOR
THE PORT OF NEW YORK AUTHORITY

FLOOR TRUSS C32T19-L (2) (SEE NOTE 2) x 58'-10"
WORLD TRADE CENTER TOWERS A & B

FABRICATION BY LACLEDE STEEL COMPANY		
FABRICATED AT MADISON, ILLINOIS	DESIGN DRAWING NO. 7-AB1-18	PLATE
APPROVED FOR FABRICATION BY: James White FOR P.O.N.Y.A. DATE 1/13/69	DRAWN BY: [illegible] DATE OCT. 8, 1968	
APPROVED FOR FABRICATION BY: [illegible] FOR FABRICATOR DATE	CHECKED BY: T.H.CHUNG DATE OCT. 10, 1968	IN CHARGE OF [illegible]
DETAILED BY: A. CARL WEBER	FABRICATION CONT. NO. W.T.C. 221	SHEET ST 219

[redacted]

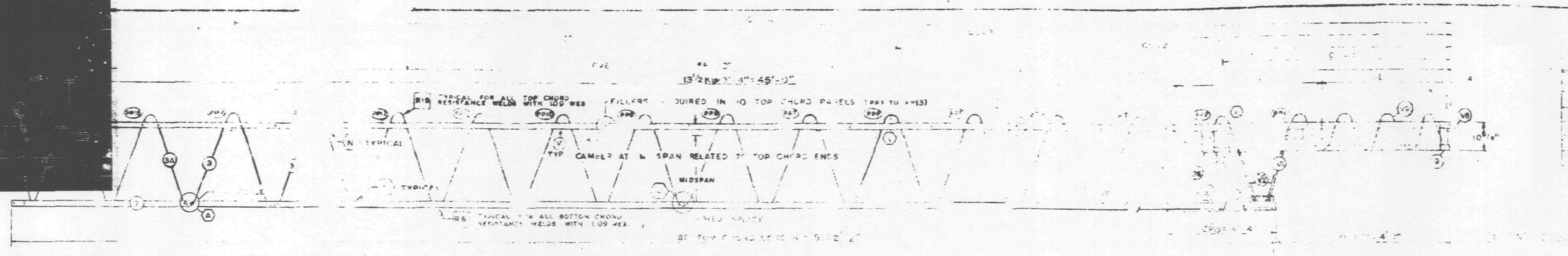

EL END (CORE)

TRUSS ELEVATION

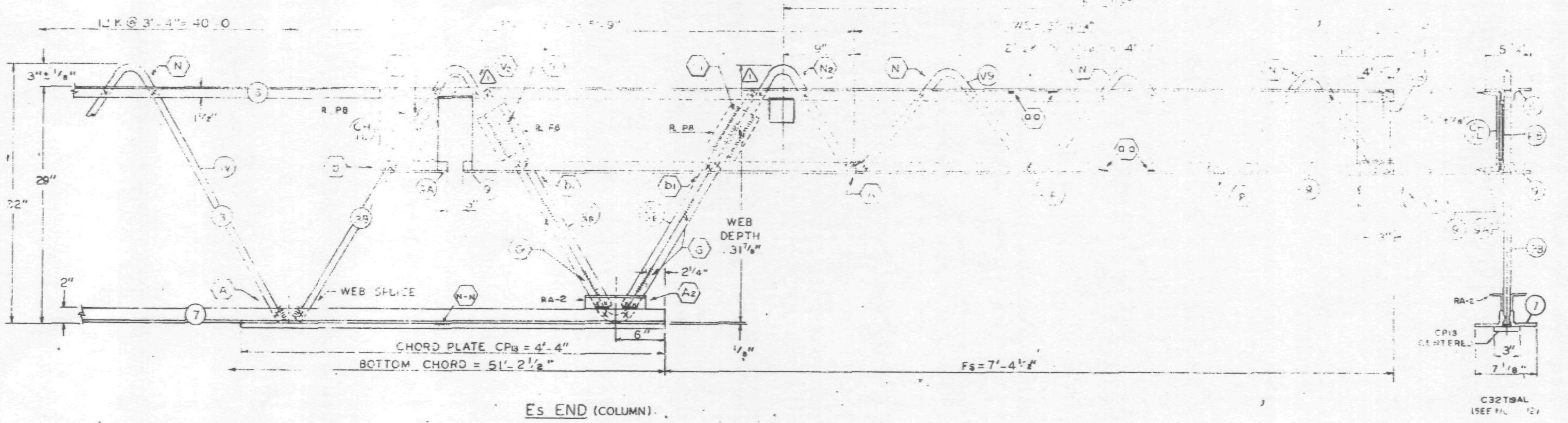

Es END (COLUMN)

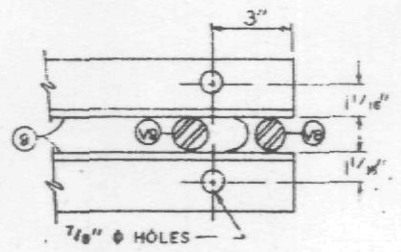

SECTION A-A

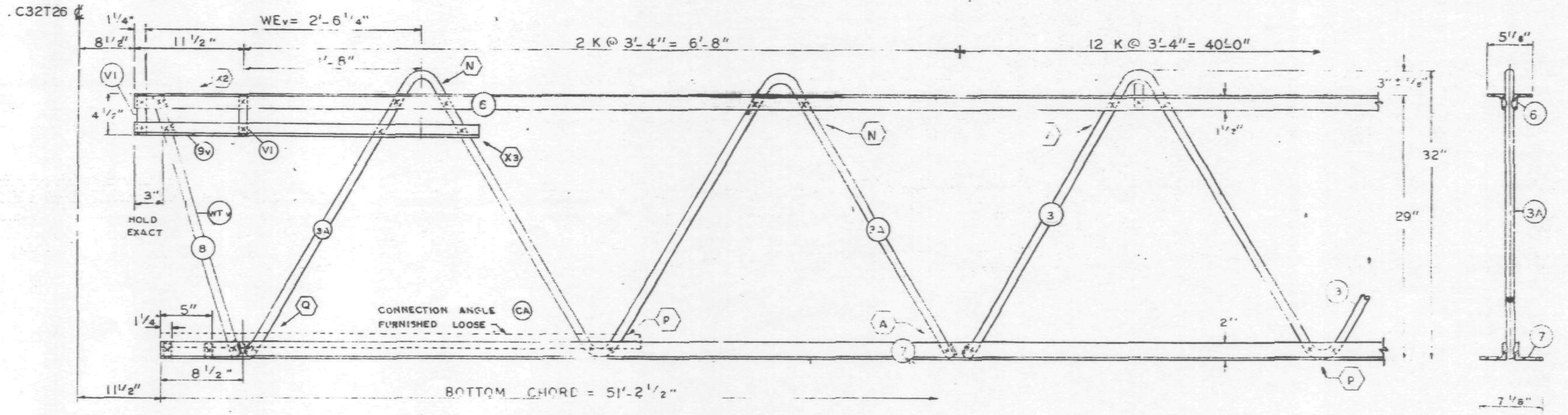

EL END (CORE)

FABRICATION REQUIREMENTS

	DESIGN	TOLERANCE
CAMBER AT MIDSPAN	1 15/16"	± 3/8"
DESIGN LENGTH	29	± 1/4"
PANEL K	3'-4"	± 1/4"
OVERALL LENGTH	58'-10"	3/8"
WEB DEPTH	3 8"	± 1/4"

ALL PANEL POINTS ... WELDED (X).
... SHADED AREAS
... BOTTOM CHORD WEB SPLICES.
... HEXAGON INDICATE WELD DETAIL, ie., (A).
... NUMBERS IN SQUARES INDICATE ... STRENGTH IDENTIFIED IN THE ... PROGRAM, ie., [R9].
... WELD DETAILS SHOWN ON SHEETS ST290, ST291, ST 292 & ST 293.
... CHANNEL DETAILS SHOWN ON SHEET ST 407.
... PLATE DETAILS SHOWN ON SHEET ST 283.
SEE SHEET ST295 FOR VI DETAIL.

NOTE 2

... SHOWN FOR C32T19AL TRUSSES ARE APPLICABLE TO C32T19AR TRUSSES WITH CHANNEL CHIR AND BEARING ANGLE 9A PLACED ON OPP. HAND AS SHOWN.

NO	DATE	REVISION	BY
1	10-31-68	AS NOTED	LWH

REF. DRWG.

7-AB1-18	8-15-68
7-AB1-54	8-15-68
7-AB1-53 & 55	7-22-68
7-AB3-2	1-3-68
7-AB3-24	8-15-68
7-AB4-17 & 17.2	8-15-68
SA-124	8-1-68
7 AB4-11	7-22-68

PAINT
LACLEDE ELECTROCOAT
RED ...

TRUSS DESIGNATION	TOP CHORD TWO ANGLES MK	TYPE STEEL	CHORD SIZE	LENGTH	BOTTOM CHORD TWO ANGLES MK	TYPE STEEL	CHORD SIZE	LENGTH	MAIN WEB "W" MK	TYPE STEEL	DIA	LENGTH	NO. OF K	FILLER NO	DIA	HOLES	CHORD PLATE MK	TYPE STEEL	SIZE	LENGTH	... NO	DIA	LENGTH	CHANNEL PLATES MK	TYPE STEEL	PCS	SIZE	LENGTH	REINFORCING ANGLES (2 REQ'D) MK	TYPE STEEL	SIZE	LENGTH	TRUSS DATA
C32T19AL-5810	6	A242	2"x1 1/2"x 31	58'-10"	7	A36	3" x 2" x 33"	51'-2 1/2"	3	A36	1.09	74'-9"	12 K @ 3'-4" = 40'-4	12	1.09	—	—	—	—	—	4	1.09	3"	FC	A36	3	4 2"x39		RA2	A36	3"x 2"x 33"	7 1/2"	
									3A	A242	1.14	12'-5 1/2"	2 K @ 3'-4" = 6'-8"																				
									3B	A242	1.14	10'-7 5/8"	1 3/4 K @ 3'-4" = 5'-9"																				

COLUMN END	Es END TRUSS DESIGNATION	BEARING ANGLES MK	TYPE STEEL	CHORD SIZE	PCS.	LENGTH	WE	DOUBLE STRUT MK	TYPE STEEL	DIA	LENGTH (2 REQ'D)	CHORD PLATE MK	TYPE STEEL	SIZE	LENGTH	END STIFFENER MK. V8 TYPE STEEL	DIA.	LENGTH	MK. V9 TYPE STEEL	DIA.	LENGTH	MK. V10 TYPE STEEL	DIA	LENGTH	CHANNEL MK	TYPE STEEL	CHANNEL SIZE	LENGTH
	C32T19AL-5810	9 9A	A242 A242	2"x 1 1/2"x.25" 2"x 1 1/2"x.25"	1 1	9'-5" 6 1/2"	5'-4 1/4"	DS 1a	A242	1.14	2'-6 3/4"	CP 13	A36	3"x.25"	4'-4"	A242	1.14	10 1/2"	A242	1.14	8'-3 1/8"	—	—	—	CHIL CHIR	A36 A36	10 30 10 30	10'-0" 10'-0"

CHECK DIMENSION FOR TRUSS FAB.

LOCATION OF TRANS. TRUSS

CL-1	CL-2	CL-3	CL-4	Fs
9'-6 1/2"	22'-10 1/2"	36'-2 1/2"	49'-6 1/2"	7'-4 1/2"

CORE END	EL END TRUSS DESIGNATION	BEARING ANGLES MK	TYPE STEEL	CHORD SIZE	LENGTH	WEv	DIAGONAL "TV" STRUT MK	TYPE STEEL	DIA	LENGTH	VERTICAL "SV" STRUT MK	TYPE STEEL	DIA	LENGTH	END STIFFENER (2 REQ'D) MK. V1 TYPE STEEL	DIA	LENGTH	MK. V2 TYPE STEEL	DIA	LENGTH	MK. V4 TYPE STEEL	DIA	LENGTH	DOUBLE STRUT MK	TYPE STEEL	DIA.	LENGTH	DOUBLE STRUT MK	TYPE STEEL	DIA.	LENGTH	CONNECTION ANGLE (I FURNISH LOOSE) NO	MK.	TYPE STEEL	ANGLE SIZE	LENGTH
	C32T19AL-5810	9	A242	2"x1 1/2"x 31	3'	2'-6 1/4"	8	A242	1.14	2' 5 3/4"	—	—	—	—	A242	1.14	4 3/8	—	—	—	—	—	—	—	—	—	—	—	—	—	—	2	CA	A242	2"x1 1/2"x.37	4'-4"

FLOOR TRUSS DETAILS
FOR
WORLD TRADE CENTER - N.Y.C.
FOR
THE PORT OF NEW YORK AUTHORITY

FLOOR TRUSS C32T19AL (SEE NOTE 2) x 58'-10"
WORLD TRADE CENTER TOWERS A & B

FABRICATION BY LACLEDE STEEL COMPANY

FABRICATED AT MADISON, ILLINOIS	DESIGN DRAWING NO. 7-AB1-18	PLATE
APPROVED FOR FABRICATION FOR PONYA BY. DATE 11/7/68	DRAWN BY gdc DATE OCT. 8, 1968	
APPROVED FOR FABRICATION FOR FABRICATOR BY DATE	CHECKED BY T.M. CHURA DATE OCT. 10, 1968	IN CHARGE OF PROD. DEV.
DETAILED BY: A. CARL WEBER	FABRICATION CONT NO ... 221	SHEET NO ST 219A1

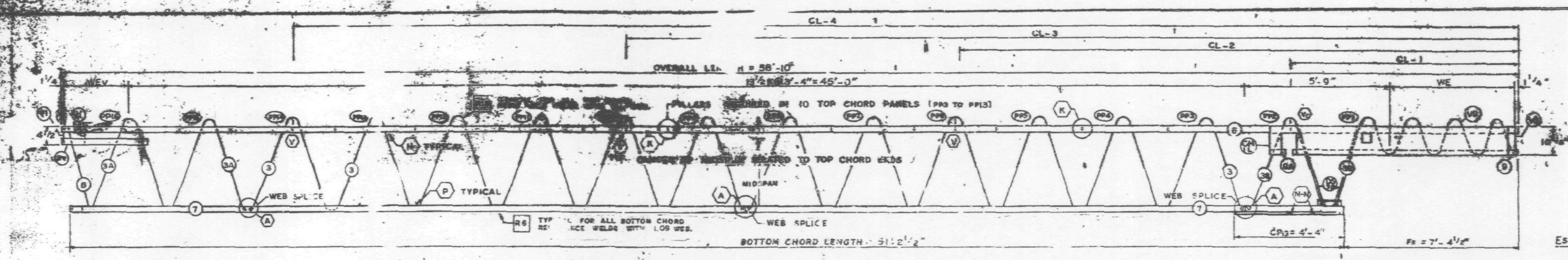

EL END (CORE)

TRUSS ELEVATION

Es END (COLUMN)

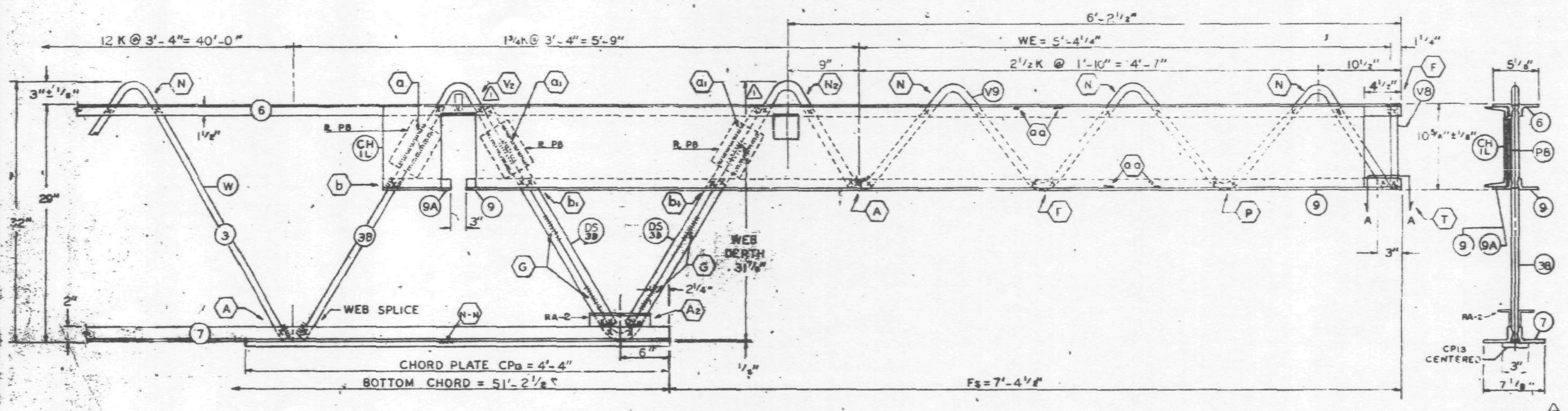

Es END (COLUMN)

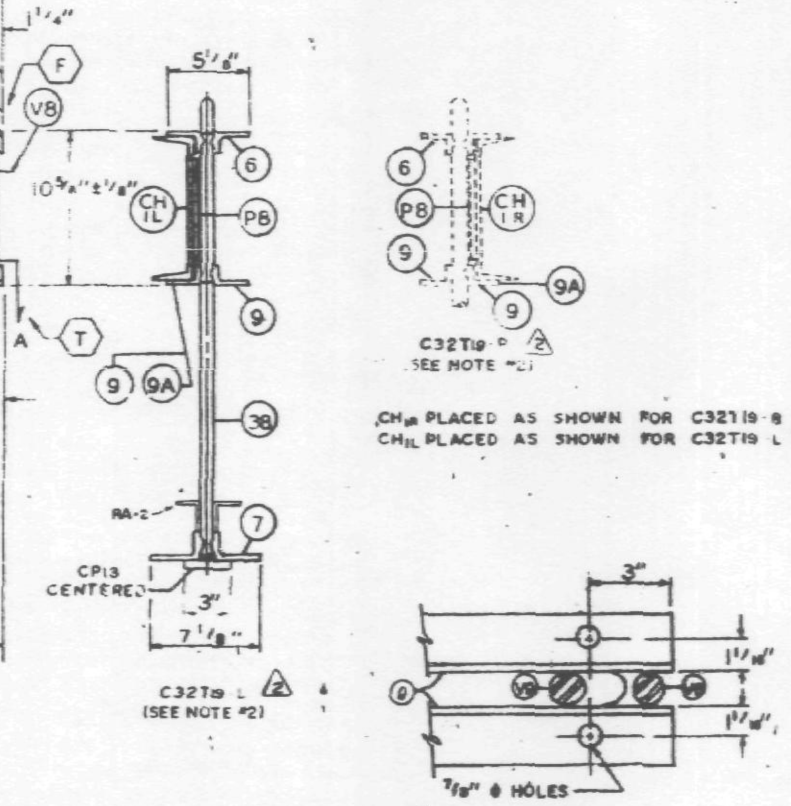

SECTION A-A

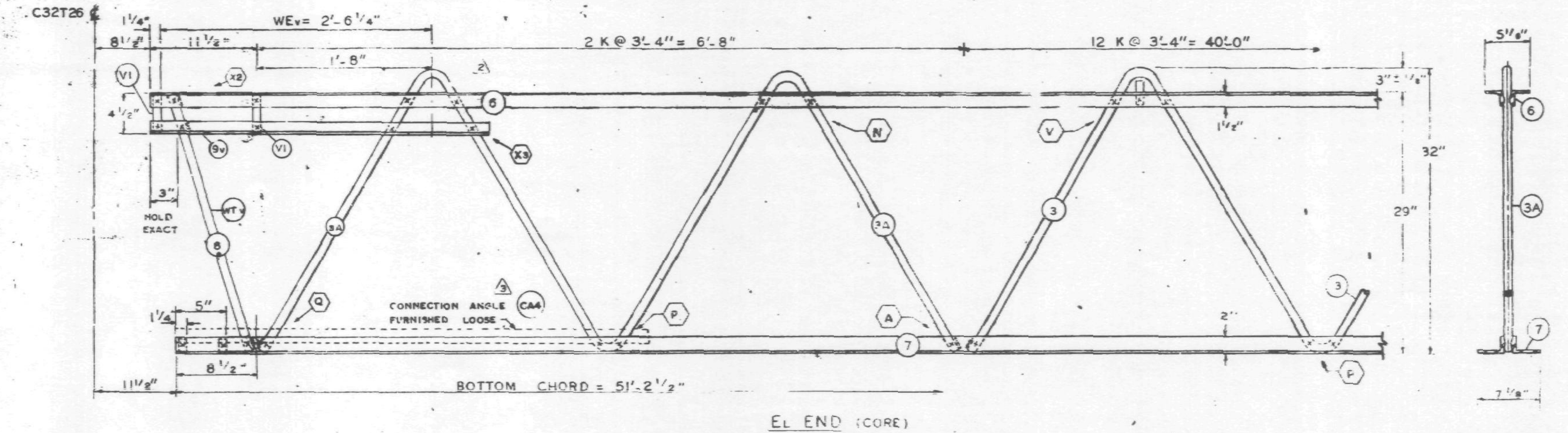

EL END (CORE)

FABRICATION REQUIREMENT	DESIGN	TOLERANCE
CAMBER AT MIDSPAN	1 15/16	[illegible]
DESIGN DEPTH	29"	[illegible]
PANEL K	3'-4"	[illegible]
OVERALL LENGTH	58'-10"	[illegible]
WEB DEPTH	[illegible]	[illegible]

ALL PANEL POINTS RESISTANCE WELDED. (x).
ARC WELDS INDICATED AT SHADED AREAS AND AT BOTTOM CHORD WEB SPLICES.
LETTERS IN HEXAGON INDICATE WELD DETAIL, ie., (A).
LETTERS AND NUMBERS IN SQUARES INDICATE RESISTANCE WELD STRENGTH IDENTIFIED IN THE QUALITY CONTROL PROGRAM, ie., [R9].
ALL WELD DETAILS SHOWN ON SHEETS ST290, ST291, ST 292 & ST 293.
ALL CHANNEL DETAILS SHOWN ON SHEET ST 407.
CHORD PLATE DETAILS SHOWN ON SHEET ST 283.
SEE SHEET ST295 FOR VI DETAIL.

NOTE 2

ALL DETAILS & ELEVATIONS SHOWN FOR C32T19-L TRUSSES ARE APPLICABLE TO C32T19-R TRUSSES (2) WITH CHANNEL CHIR AND BEARING ANGLE 9A PLACED ON OPP. HAND AS SHOWN.

NO	DATE	REVISION
3	12-3-68	AS NOTED
2	11-7-68	AS NOTED
1	10-31-68	AS NOTED

(3) REF. DRWG.

7-AB1-18	10-4-68
7-AB1-34	11-25-68
7-AB1-53	7-22-68
7-AB3-2	1-3-68
7-AB3-24	8-15-68
7-AB4-17 & 17.2	10-4-68
SA-124	10-11-68
7 AB4-11	7-22-68
7-AB1-55	10-15-68

LACLEDE STEEL CO

PAINT
LACLEDE ELECTROCOAT
RED NO. 10001

TRUSS DESIGNATION	TOP CHORD TWO ANGLES				BOTTOM CHORD TWO ANGLES				MAIN WEB "W"					FILLER		"M" C/C HOLES	CHORD PLATE				CONNECTION FILLERS			CHANNEL PLATES					REINFORCING ANGLES (2 REQ'D)				TRUSS DATA
(2)	MK	TYPE STEEL	CHORD SIZE	LENGTH	MK	TYPE STEEL	CHORD SIZE	LENGTH	MK	TYPE STEEL	DIA	LENGTH	NO. OF K	NO.	DIA		MK	TYPE STEEL	SIZE	LENGTH	NO.	DIA	LENGTH	MK	TYPE STEEL	PCS	SIZE	LENGTH	MK	TYPE STEEL	SIZE	LENGTH	
C32T19-L-5810	6	A242	2"x1 1/2"x.31	58'-10"	7	A36	3"x2"x.33"	51'-2 1/2"	3 3A 3B	A36 A242 A242	1.09 1.14 1.14	74'-9" 12'-5 1/2" 10'-7 5/8"	12 K @ 3'-4" = 40'-0" 2 K @ 3'-4" = 6'-8" 1 3/4 K @ 3'-4" = 5'-9"	12	1.09	—	—	—	—	—	4	1.09	3"	P8	A36	3	4 1/2"x.39	5 1/2"	RA-2	A36	3"x2"x.33"	7 1/2"	

COLUMN END

Es END	TRUSS DESIGNATION	BEARING ANGLES					WE	DOUBLE STRUT				CHORD PLATE				END STIFFENER MK. V8			MK. V9			MK. V10			CHANNEL			
	(2)	MK	TYPE STEEL	CHORD SIZE	PCS	LENGTH		MK	TYPE STEEL	DIA	LENGTH (2 REQ'D)	MK	TYPE STEEL	SIZE	LENGTH	TYPE STEEL	DIA	LENGTH	TYPE STEEL	DIA	LENGTH	TYPE STEEL	DIA	LENGTH	MK	TYPE STEEL	CHANNEL SIZE	LENGTH
	C32T19-L-5810	9 9A	A242 A242	2"x1 1/2"x.25" 2"x1 1/2"x.25"	2 1	9'-5" 8 1/2"	5'-4 1/4"	DS 3B	A242	1.14	2'-6 3/4"	CP 13	A36	3"x.25"	4'-4"	A242	1.14	10 1/2"	A242	1.14	8'-3 7/8"	—	—	—	CHIL CHIR	A36 A36	10 - 30 10 - 30	10'-0" 10'-0"

CHECK DIMENSION FOR TRUSS FAB.

LOCATION OF TRANS. TRUSS				
CL-1	CL-2	CL-3	CL-4	Fs
9'-6 1/2"	22'-10 1/2"	36'-2 1/2"	49'-6 1/2"	7'-4 1/2"

CORE END

EL END	TRUSS DESIGNATION	BEARING ANGLES				WEv	DIAGONAL "Tv" STRUT				VERTICAL "STv" STRUT				END STIFFENER (2 REQ'D) MK. V1			MK. V2			MK. V4			DOUBLE STRUT				DOUBLE STRUT				(FURNISH LOOSE)	CONNECTION ANGLE			
	(2)	MK	TYPE STEEL	CHORD SIZE	LENGTH		MK	TYPE STEEL	DIA	LENGTH	MK	TYPE STEEL	DIA	LENGTH	TYPE STEEL	DIA	LENGTH	TYPE STEEL	DIA	LENGTH	TYPE STEEL	DIA	LENGTH	MK	TYPE STEEL	DIA	LENGTH	MK	TYPE STEEL	DIA	LENGTH	NO.	MK	TYPE STEEL	ANGLE SIZE	LENGTH
	C32T19-L-5810	9v	A242	2"x1 1/2"x.31	3'-2"	2'-6 1/4"	8	A242	1.14	2'-5 3/4"	—	—	—	—	A242	1.14	4 3/8"	—	—	—	—	—	—	—	—	—	—	—	—	—	—	2	CA-4 (3)	A242	2"x1 1/2"x.37	4'-4"

FLOOR TRUSS DETAILS
FOR
WORLD TRADE CENTER - N.Y.C.
FOR
THE PORT OF NEW YORK AUTHORITY

FLOOR TRUSS C32T19-L (2) (SEE NOTE 2) x 58'-10"
WORLD TRADE CENTER TOWERS A & B

FABRICATION BY LACLEDE STEEL COMPANY			
FABRICATED AT MADISON, ILLINOIS		DESIGN DRAWING NO. 7-AB1-18	PLATE
APPROVED FOR FABRICATION BY: James White FOR P.O.N.Y.A.	DATE 12/9/68	DRAWN BY: gdc DATE OCT. 8, 1968	
APPROVED FOR FABRICATION BY: FOR FABRICATOR	DATE	CHECKED BY: T.M. CHURA DATE OCT. 10, 1968	IN CHARGE OF PROD. DEV.
DETAILED BY: A. CARL WEBER		FABRICATION CONT. NO. W.T.C. 221	SHEET ST 219

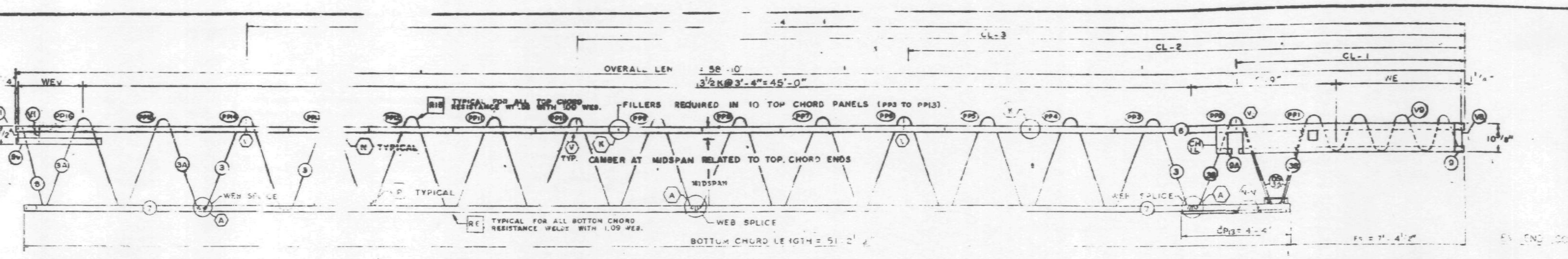

TRUSS ELEVATION

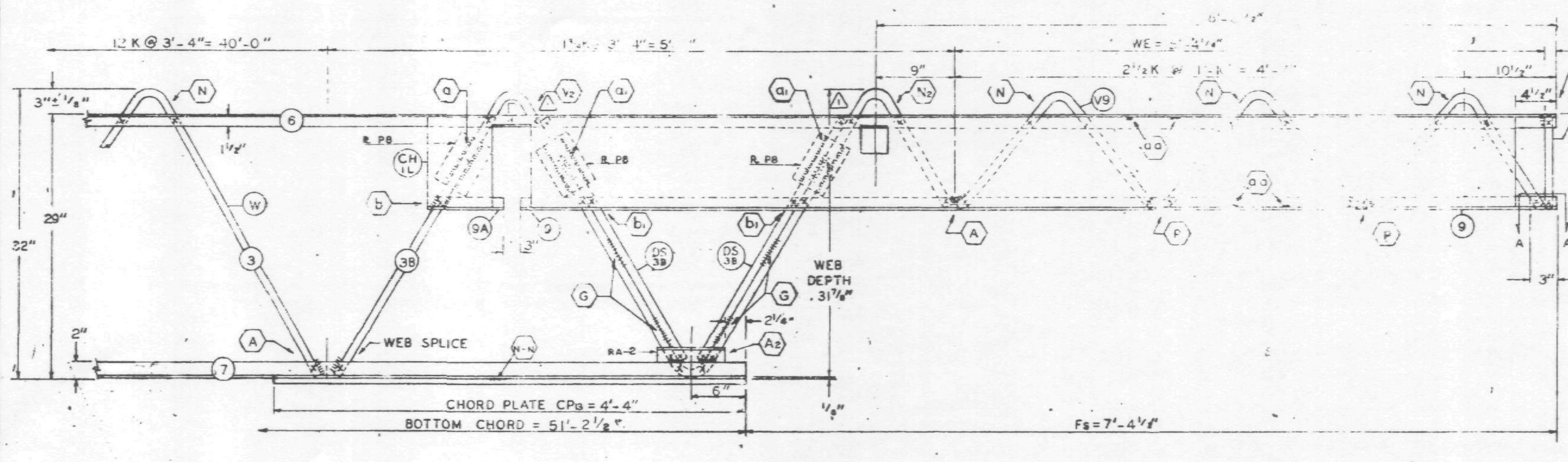

Es END (COLUMN)

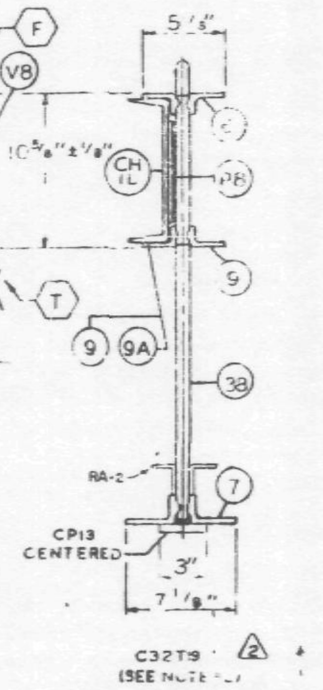

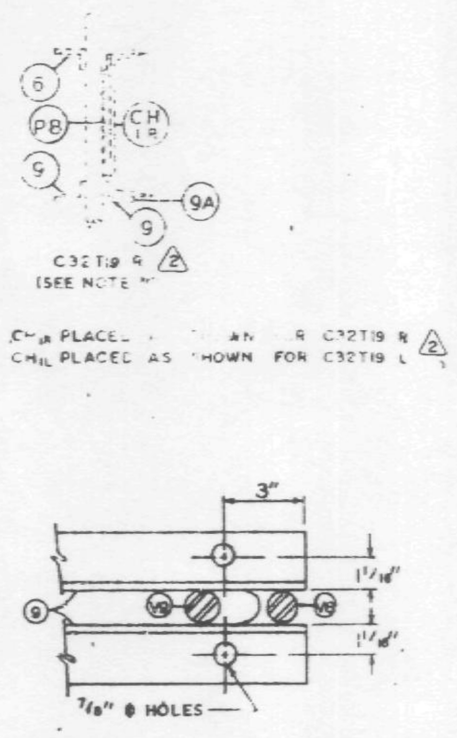

SECTION A-A

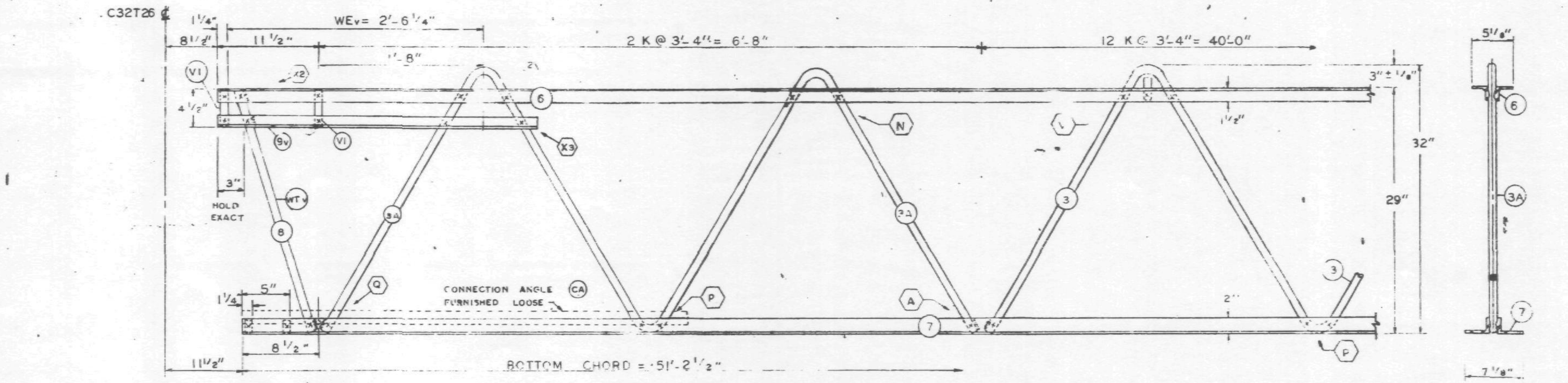

EL END (CORE)

FABRICATION REQUIREMENT.	DESIGN	TOLERANCE
CAMBER AT MIDSPAN	1 15/16"	± 3/8"
DESIGN DEPTH	29"	± 1/4"
PANEL K	3'-4"	± 1/4"
OVERALL LENGTH	58'-10"	± 1/8"
WEB DEPTH	31 7/8"	± 1/4"

ALL PANEL POINTS RESISTANCE WELDED. (X).
ARC WELDS INDICATED AT SHADED AREAS AND AT BOTTOM CHORD WEB SPLICES.
LETTERS IN HEXAGON INDICATE WELD DETAIL, ie., (A).
LETTERS AND NUMBERS IN SQUARES INDICATE RESISTANCE WELD STRENGTH IDENTIFIED IN THE QUALITY CONTROL PROGRAM ie., [R9].
ALL WELD DETAILS SHOWN ON SHEETS ST290, ST291, ST 292 & ST 293.
ALL CHANNEL DETAILS SHOWN ON SHEET ST 407.
CHORD PLATE DETAILS SHOWN ON SHEET ST 283.
SEE SHEET ST295 FOR VI DETAIL.

NOTE 2

ALL DETAILS & ELEVATIONS SHOWN FOR C32T19-L TRUSSES ARE APPLICABLE TO C32T19-R TRUSSES (2) WITH CHANNEL CHIR AND BEARING ANGLE 9A PLACED ON OPP. HAND AS SHOWN.

NO	DATE	REVISION	BY
2	11-7-68	AS NOTED	G.D.C.
1	10-31-68	AS NOTED	LWH

(2) REF. DRWG.

7-AB1-18	10-4-68
7-AB1-54	10-4-68
7-AB1-53	7-22-68
7-AB3-2	1-3-68
7-AB3-24	8-15-68
7-AB4-17 & 17.2	10-4-68
SA-124	10-11-68
7-AB4-11	7-22-68
7-AB1-55	10-15-68

TRUSS DESIGNATION	TOP CHORD TWO ANGLES MK.	TYPE STEEL	CHORD SIZE	LENGTH	BOTTOM CHORD TWO ANGLES MK.	TYPE STEEL	CHORD SIZE	LENGTH	MAIN WEB "W" MK.	TYPE STEEL	DIA.	LENGTH	NO. OF K	FILLER NO.	DIA.	"M" C/C HOLES	CHORD PLATE MK.	TYPE STEEL	SIZE	LENGTH	FILLERS NO.	DIA.	LENGTH	CHANNEL PLATES MK.	TYPE STEEL	PCS.	SIZE	LENGTH	REINFORCING ANGLES (2 REQ'D) MK.	TYPE STEEL	SIZE	LENGTH	TRUSS DATA
C32T19-L-5810	6	A242	2"x1½"x.31	58'-10"	7	A36	3"x2"x.33"	51'-2½"	3 3A 3B	A36 A242 A242	1.09 1.14 1.14	74'-9" 12'-5 1/2" 10'-7 5/8"	12 K @ 3'-4" = 40'-0" 2 K @ 3'-4" = 6'-8" 1 3/4 K @ 3'-4" = 5'-9"	12	1.09"	—	—	—	—	—	4	1.09	3"	PB	A36	3	4½"x39	5½"	RA-2	A36	3"x2"x33"	7½"	

COLUMN END

Es END TRUSS DESIGNATION	BEARING ANGLES MK.	TYPE STEEL	CHORD SIZE	PCS.	LENGTH	WE	DOUBLE STRUT MK.	TYPE STEEL	DIA.	LENGTH (2 REQ'D)	CHORD PLATE MK.	TYPE STEEL	SIZE	LENGTH	END STIFFENER MK. V8 TYPE STEEL	DIA.	LENGTH	MK. V9 TYPE STEEL	DIA.	LENGTH	MK. V10 TYPE STEEL	DIA.	LENGTH	CHANNEL MK.	TYPE STEEL	CHANNEL SIZE	LENGTH
C32T19-L-5810	9 9A	A242 A242	2"x1½"x.25" 2"x1½"x.25"	2 1	9'-5" 8'-1½"	5'-4⅛"	Ds 3B	A242	1.14	2'-6¾"	CP13	A36	3"x.25"	4'-4"	A242	1.14	10½"	A242	1.14	8'-3⅞"	—	—	—	CHIL CHIR	A36 A36	10 [30 10 [30	10'-0" 10'-0"

CHECK DIMENSION FOR TRUSS FAB.

LOCATION OF TRANS. TRUSS				
CL-1	CL-2	CL-3	CL-4	Fs
9'-6½"	22'-10½"	36'-2½"	49'-6½"	7'-4½"

CORE END

EL END TRUSS DESIGNATION	BEARING ANGLES MK.	TYPE STEEL	CHORD SIZE	LENGTH	WEv	DIAGONAL "T" STRUT MK.	TYPE STEEL	DIA.	LENGTH	VERTICAL "S" STRUT MK.	TYPE STEEL	DIA.	LENGTH	END STIFFENER (2 REQ'D) MK. V1 TYPE STEEL	DIA.	LENGTH	MK. V2 TYPE STEEL	DIA.	LENGTH	MK. V4 TYPE STEEL	DIA.	LENGTH	DOUBLE STRUT MK.	TYPE STEEL	DIA.	LENGTH	DOUBLE STRUT MK.	TYPE STEEL	DIA.	LENGTH	CONNECTION ANGLE (FURNISH LOOSE) NO.	MK.	TYPE STEEL	ANGLE SIZE	LENGTH
C32T19-L-5810	9v	A242	2"x1½"x.31	3'-2"	2'-6¼"	8	A242	1.14	2-5¾"	—	—	—	—	A242	1.14	4⅜"	—	—	—	—	—	—	—	—	—	—	—	—	—	—	2	CA	A242	2"x1½"x.37	4'-4"

PAINT
LACLEDE ELECTROCOAT
RED NO. 10001

FLOOR TRUSS DETAILS
FOR
WORLD TRADE CENTER - N.Y.C.
FOR
THE PORT OF NEW YORK AUTHORITY

FLOOR TRUSS C32T19-L (2) (SEE NOTE 2) x 58'-10"
WORLD TRADE CENTER TOWERS A & B

FABRICATION BY LACLEDE STEEL COMPANY

FABRICATED AT MADISON, ILLINOIS		DESIGN DRAWING NO. 7-AB1-18	PLATE
APPROVED FOR FABRICATION BY ___ FOR P.O.N.Y.A.	DATE 11/18/68	DRAWN BY gdc DATE OCT. 3, 1968	
APPROVED FOR FABRICATION BY ___ FOR FABRICATOR	DATE	CHECKED BY: T.M. CHURA DATE OCT 10, 1968	IN CHARGE OF PROD. DEV.
DETAILED BY: A CARL WEBER		FABRICATION CONT. NO W.T.C 221	SHEET NO. ST 219 L (2)

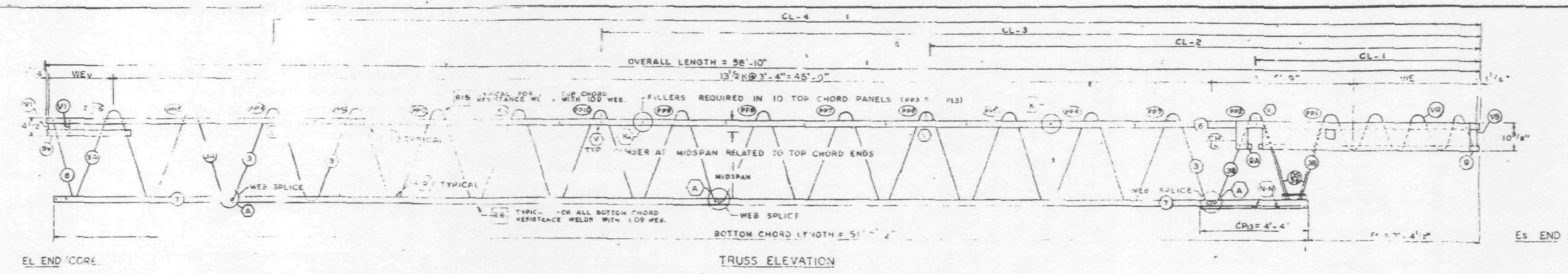

TRUSS ELEVATION

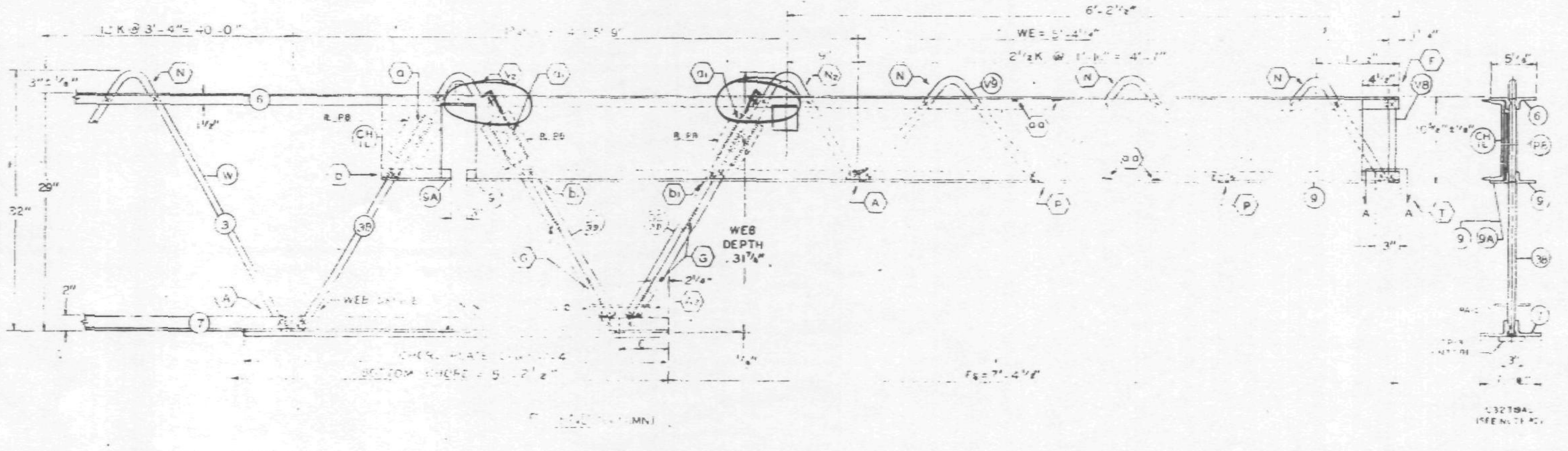

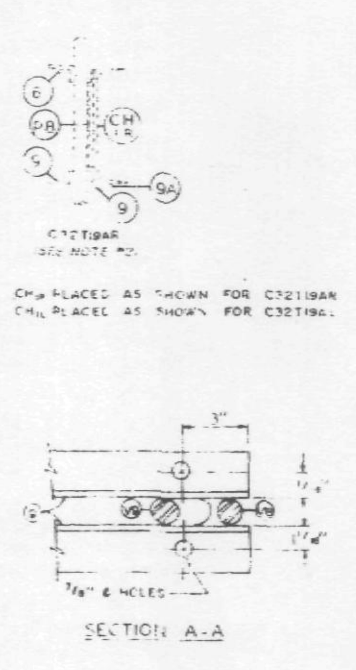

SECTION A-A

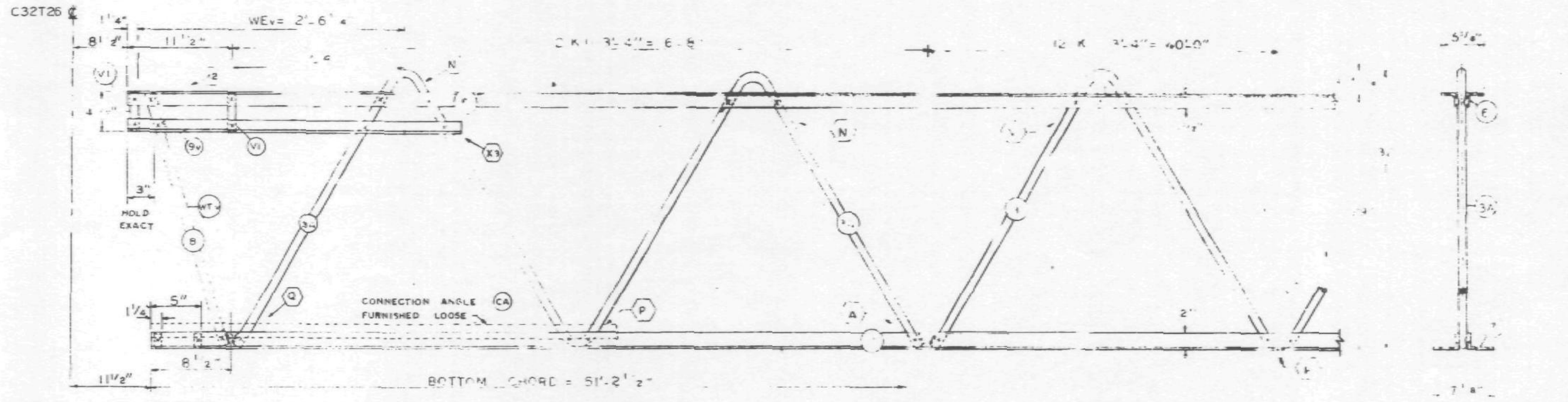

EL END (CORE)

FABRICATION REQUIREMENTS	DESIGN	TOLERANCE
CAMBER AT MIDSPAN	1 15/16"	[illegible]
DESIGN DEPTH	29"	[illegible]
PANEL	3'-4"	[illegible]
OVERALL LENGTH	58'-10"	[illegible]
WEB DEPTH	[illegible]	[illegible]

ALL PANEL POINTS RESISTANCE WELDED (X) ... ARC WELDS INDICATED AT SHADED AREAS AND AT BOTTOM CHORD WEB SPLICES ... LETTERS IN HEXAGON INDICATE WELD DETAIL ... LETTERS AND NUMBERS IN SQUARES INDICATE RESISTANCE WELD STRENGTH IDENTIFIED IN THE QUALITY CONTROL PROGRAM. ...
ALL WELD DETAILS SHOWN ON SHEETS ... ST29..., ST 292 & ST 293.
ALL CHANNEL DETAILS SHOWN ON SHEET ST4...
CHORD PLATE DETAILS SHOWN ON SHEET ...
SEE SHEET ST295 FOR VI DETAIL.

NOTE:
DETAILS & ELEVATIONS SHOWN FOR C32T19AL ... APPLICABLE TO C32T19AR TRUSSES WITH CHANNEL CHIP AND BEARING ANGLE 9A PLACED ON OPP. HAND AS SHOWN.

NO	DATE	REVISION	BY

REF. DRWG.

7-AB1-18	8-15-68
7-AB1-54	8-15-68
7-AB1-53 & 55	7-22-68
7-AB3-2	[illegible]
7-AB3-24	8-15-68
7-AB4-17 & 17.2	8-15-68
[illegible]	[illegible]
7-AB4-11	7-22-68

X 10/29/68 SK

PAINT
LACLEDE ELECTROCOAT
RED NO. ...

TRUSS DESIGNATION	TOP CHORD TWO ANGLES MK	TYPE STEEL	CHORD SIZE	LENGTH	BOTTOM CHORD TWO ANGLES MK	TYPE STEEL	CHORD SIZE	LENGTH	MAIN WEB "W" MK	TYPE STEEL	DIA.	LENGTH	NO. OF ...	FILLER NO.	DIA.	"M" C/C HOLES	CHORD PLATE MK	TYPE STEEL	SIZE	LENGTH	CONNECTION FILLERS NO.	LENGTH	CHANNEL PLATES MK	TYPE STEEL	SIZE	LENGTH	REINFORCING ANGLES MK	TYPE STEEL	SIZE	LENGTH	TRUSS DATA
C32T19AL-5810	6	A242	2"x1½"x.31	58'-10"	7	A36	3"x2"x.35"	51'-2½"	3 / 3A / 3B	A36 / A242 / A242	1.09 / 1.14 / 1.14	14'-9" / 12'-2½" / [illegible]	12 K @ 3'-4" = 40'-0 / 2 K @ 3'-4" = 6'-8" / [illegible]	2	1.09"	—	—	—	—	—	4 / 1.09	3"	PB	A36	4"x2"x.39	[illegible]	RA2	A36	3"x2"x.33"	7'-2"	

Es END TRUSS DESIGNATION	BEARING ANGLES MK	TYPE STEEL	CHORD SIZE	PCS	LENGTH	WE	DOUBLE STRUT MK	TYPE STEEL	DIA.	LENGTH (REQ'D)	CHORD PLATE MK	TYPE STEEL	SIZE	LENGTH	END STIFFENER MK. V8 TYPE STEEL	DIA.	LENGTH	MK. V9 TYPE STEEL	DIA.	LENGTH	MK. V10 TYPE STEEL	DIA.	LENGTH	CHANNEL MK	TYPE STEEL	CHANNEL SIZE	LENGTH
C32T19AL-5810	9 / 9A	A242 / A242	2½"x2"x.25" / 2½"x2"x.25"	[illegible]	[illegible]	7'-4¾"	5	A242	1.14	2'-5¾"	CP13	A36	3"x.25"	4'-4"	A242	1.14	10½"	A242	1.14	8'-3⅞"	—	—	—	CHL / CHR	A36 / A36	10 x 30 / 10 x 30	10'-0" / 10'-0"

EL END TRUSS DESIGNATION	BEARING ANGLES MK	TYPE STEEL	CHORD SIZE	LENGTH	WE₁	DIAGONAL STRUT MK	TYPE STEEL	DIA.	LENGTH	VERTICAL S.T. STRUT MK	TYPE STEEL	DIA.	LENGTH	END STIFFENER (2 REQ'D) MK. V1 TYPE STEEL	DIA.	LENGTH	MK. V2 TYPE STEEL	DIA.	LENGTH	MK. V4 TYPE STEEL	DIA.	LENGTH	DOUBLE STRUT MK	TYPE STEEL	DIA.	LENGTH	DOUBLE STRUT MK	TYPE STEEL	DIA.	LENGTH	CONNECTION ANGLE (FURNISH LOOSE) NO.	MK.	TYPE STEEL	ANGLE SIZE	LENGTH
C32T19AL-5810	9A	A242	2"x1"x2"x.31	3'-2"	2'-6¼"	8	A242	1.14	2'-5¾"	—	—	—	—	A242	1.14	4⅜"	—	—	—	—	—	—	—	—	—	—	—	—	—	—	2	CA	A242	2"x1½"x.37	4'-4"

CHECK DIMENSION FOR TRUSS FAB.

LOCATION OF TRANS. TRUSS				
CL-1	CL-2	CL-3	CL-4	Fs
5'-6½"	22'-10½"	36'-2½"	49'-6½"	7'-4½"

FLOOR TRUSS DETAILS
FOR
WORLD TRADE CENTER ...
FOR
THE PORT OF NEW YORK AUTHORITY

FLOOR TRUSS C32T19AL ... 58'-10"
WORLD TRADE CENTER TOWERS A & B

FABRICATION BY LACLEDE STEEL COMPANY
FABRICATED AT MADISON, ILLINOIS
DESIGN DRAWN NO. 7-AB1-18
APPROVED FOR FABRICATION BY ____ FOR P.O.N.Y.A. DATE ____
DRAWN BY [illegible] DATE OCT ... 1968
APPROVED FOR FABRICATION BY ____ FOR FABRICATOR DATE ____
CHECKED BY ... DATE OCT ...
FABRICATION CONTRACT NO. 221
SHEET NO. ST 219AL
DETAILED BY A. CARL WEBER

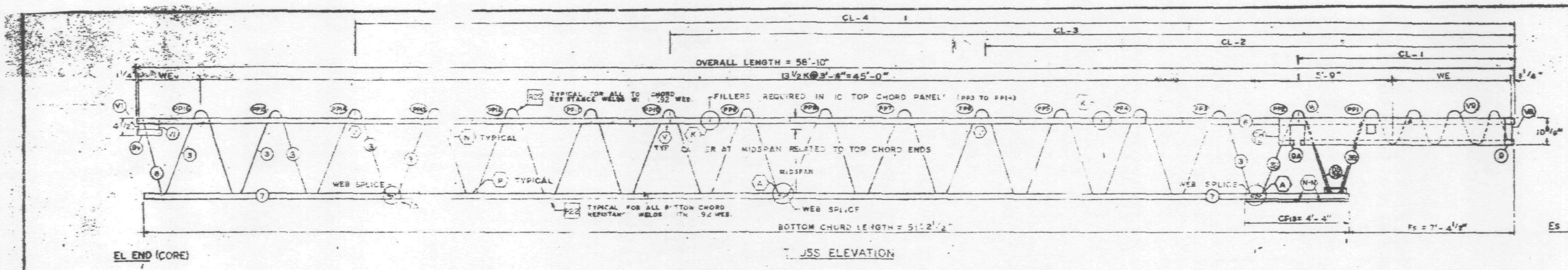

TRUSS ELEVATION

FABRICATION REQUIREMENTS	DESIGN	TOLERANCE
CAMBER AT MIDSPAN	1/18"	± 3/
DESIGN DEPTH	29"	± 1
PANEL	3'-4"	1/4"
OVERALL LENG	56'-1	± 3/
WEB DEPTH	31 7/8"	± 1/4"

ALL PANEL POINTS RESISTANCE WELDED (R.T.).
ARC WELDS INDICATED AT SHADED AREAS AND AT BOTTOM CHORD WEB SPLICES.
LETTERS IN HEXAGON INDICATE WELD DETAIL, i.e., (A).
LETTERS AND NUMBERS IN SQUARES INDICATE RESISTANCE WELD STRENGTH IDENTIFIED IN THE QUALITY CONTROL PROGRAM, i.e.
ALL WELD DETAILS SHOWN ON SHEETS ST290, ST291, ST292 AND ST293.
ALL CHANNEL DETAILS SHOWN ON SHEET ST407.
CHORD PLATE DETAILS SHOWN ON SHEET ST 283.
SEE SHEET ST 295 FOR VI DETAIL.

NOTE 2

ALL DETAILS & ELEVATIONS SHOWN FOR C32T2C L (1) TRUSSES ARE APPLICABLE TO C32T2C R TRUSSES WITH CHANNEL CHR AND BEARING ANGLE 9A PLACED ON OPP. HAND AS SHOWN.

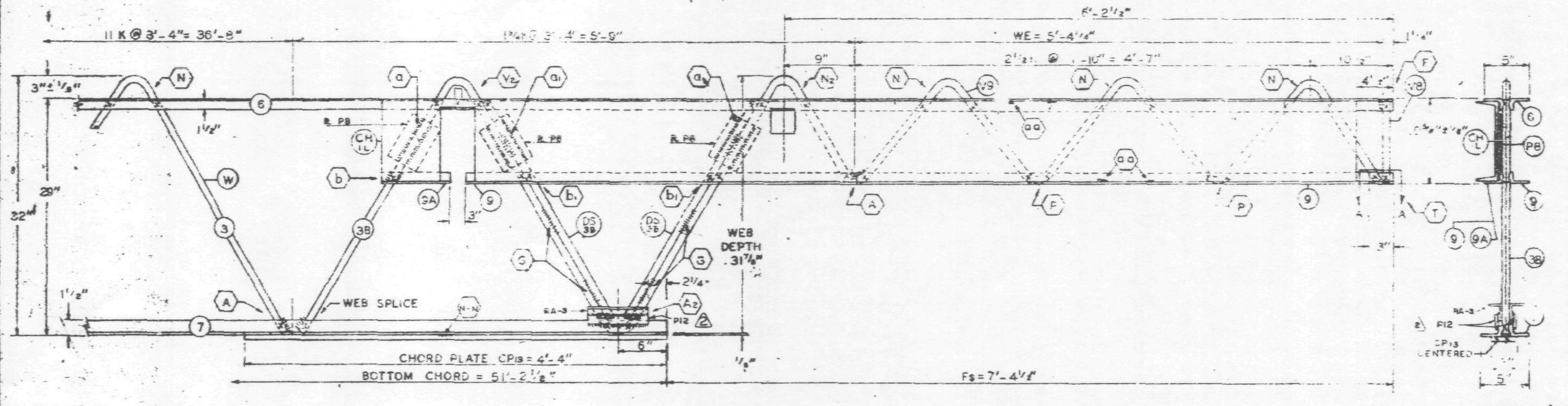

Es END (COLUMN)

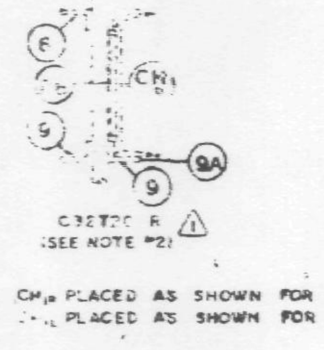

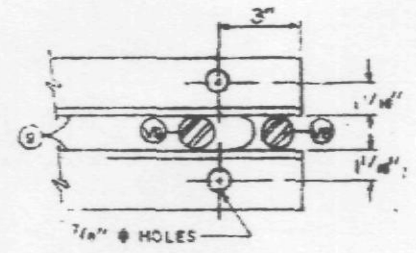

SECTION A-A

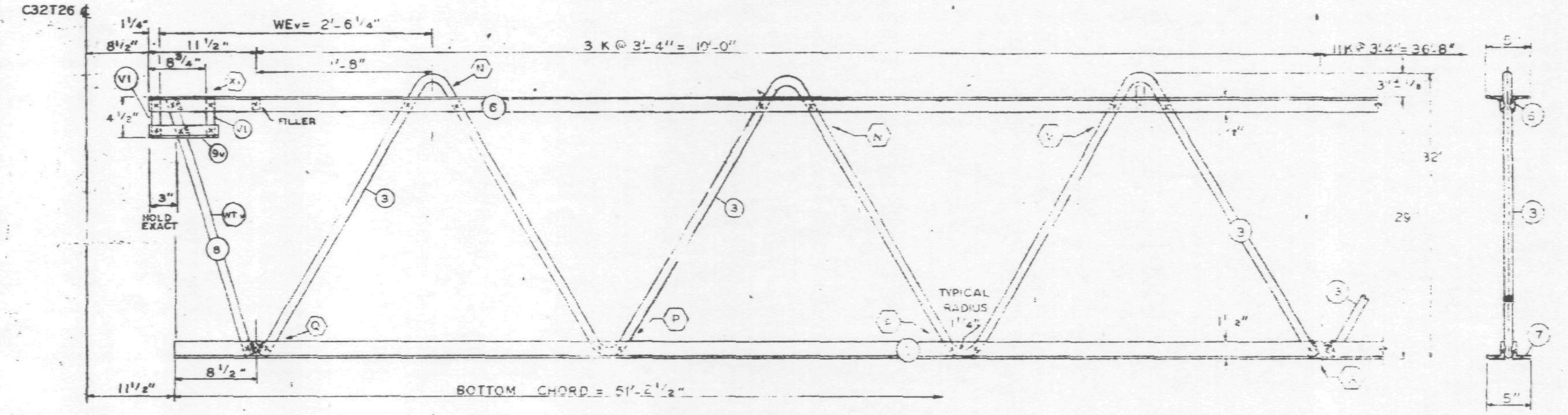

EL END (CORE)

NO	DATE	REVISION	BY
2	12-12-68	SPECIAL PLATE P12	D.C.C.
1	11-7-68	AS NOTED	D.C.C.

(2) REF. DRWG.

7-AB1-19	10-4-68
7-AB1-54	11-25-68
7-AB1-53	7-22-68
7-AB3-8	1-3-68
7-AB3-24	8-15-68
7-AB4-17 & 17.2	10-4-68
SA-124	10-11-68
7-AB4-13.1	7-22-68
7-AB1-58	10-15-63

PAINT
LACLEDE ELECTROCOAT
RED NO. 10001

TRUSS DESIGNATION	TOP CHORD TWO ANGLES				BOTTOM CHORD TWO ANGLES				MAIN WEB "W"					FILLER		"M" C/C HOLES	CHORD PLATE				CONNECTION FILLERS			CHANNEL PLATES					REINFORCING ANGLES				SPECIAL PLATES (2)			
(1)	MK.	TYPE STEEL	CHORD SIZE	LENGTH	MK.	TYPE STEEL	CHORD SIZE	LENGTH	MK.	TYPE STEEL	DIA.	LENGTH	NO. OF K	NO.	DIA.		MK.	TYPE STEEL	SIZE	LENGTH	NO. DIA.		LENGTH	MK.	TYPE STEEL	PCS.	SIZE	LENGTH	MK.	TYPE STEEL	ANGLE SIZE	LENGTH	MK.	TYPE STEEL	SIZE	LENGTH
C32T20 L-5810	6	A242	2"x1 1/2"x.25"	58'-10"	7	A242	2"x1 1/2"x.25"	51'-2 1/2"	3 3B	A242 A242	.92 .92	37'-2 1/2" 10'-7 5/8"	14 K @ 3'-4" = 46'-8" 1 3/4 K @ 3'-4" = 5'-9"	11	.92	—	—	—	—	—	4	.92	3"	P6	A36	3	4"x2"x.39	5'-2"	RA2	A242	2"x1 1/2"x.25"	7 1/2"	P12	A36	1"x3/8"	7 1/2"

COLUMN END

Es END	TRUSS DESIGNATION	BEARING ANGLES					WE	DOUBLE STRUT				CHORD PLATE				END STIFFENER MK. V8			MK. V9			MK. V10			CHANNEL			
	(1)	MK.	TYPE STEEL	CHORD SIZE	PCS.	LENGTH		MK.	TYPE STEEL	DIA.	LENGTH (2 REQ'D)	MK.	TYPE STEEL	SIZE	LENGTH	TYPE STEEL	DIA.	LENGTH	TYPE STEEL	DIA.	LENGTH	TYPE STEEL	DIA.	LENGTH	MK.	TYPE STEEL	CHANNEL SIZE	LENGTH
	C32T20 L-5810	9 9A	A242 A242	2"x1 1/2"x.25" 2"x1 1/2"x.25"	2 1	9'-5" 8 1/2"	5'-4 1/4"	DS 3B	A242	.92	2'-6 3/4"	CP 13	A36	3"x.25"	4'-4"	A242	.92	[illegible] 1/2"	A242	.92	3'-3 7/8"	—	—	—	CH L CH R	A36 A36	10 □ 30 10 □ 30	10'-0" 10'-0"

CORE END

EL END	TRUSS DESIGNATION	BEARING ANGLES				WEv	DIAGONAL "Tv" STRUT				VERTICAL "STv" STRUT				END STIFFENER (2 REQ'D) MK. V1			MK. V2			MK. V4			DOUBLE STRUT				DOUBLE STRUT			
	(1)	MK.	TYPE STEEL	CHORD SIZE	LENGTH		MK.	TYPE STEEL	DIA.	LENGTH	MK.	TYPE STEEL	DIA.	LENGTH	TYPE STEEL	DIA.	LENGTH	TYPE STEEL	DIA.	LENGTH	TYPE STEEL	DIA.	LENGTH	MK.	TYPE STEEL	DIA.	LENGTH	MK.	TYPE STEEL	DIA.	LENGTH
	C32T20-L-5810	9v	A242	2"x1 1/2"x.25"	10"	2'-6 1/4"	8	A242	.92	2'-5 3/4"	—	—	—	—	A242	.92	4 5/8"	—	—	—	—	—	—	—	—	—	—	—	—	—	—

CHECK DIMENSION FOR TRUSS FAB.

LOCATION OF TRANS. TRUSS				
CL-1	CL-2	CL-3	CL-4	Fs
9'-6 1/2"	22'-10 1/2"	36'-2 1/2"	49'-6 1/2"	7'-4 1/2"

FLOOR TRUSS DETAILS
FOR
WORLD TRADE CENTER - N.Y.C.
FOR
THE PORT OF NEW YORK AUTHORITY

FLOOR TRUSS C32T20-L (1) (SEE NOTE 2) x 58'-10"
WORLD TRADE CENTER TOWERS A & B

FABRICATION BY: LACLEDE STEEL COMPANY
FABRICATED AT MADISON, ILLINOIS
DESIGN DRAWING NO. 7-AB1-19
PLATE
APPROVED FOR FABRICATION FOR P.O.N.Y.A. James White — DATE 1/13/69
DRAWN BY: D.C.C. DATE OCT. 5, 1968
APPROVED FOR FABRICATION BY: LACLEDE STEEL CO. FOR FABRICATOR — DATE
CHECKED BY: T.M. CHURA DATE OCT. 10, 1968
IN CHARGE OF PROD. DEPT.
DETAILED BY: A CARL WEBER
FABRICATION CONT. NO. W.T.C. 221
SHEET NO. ST 220

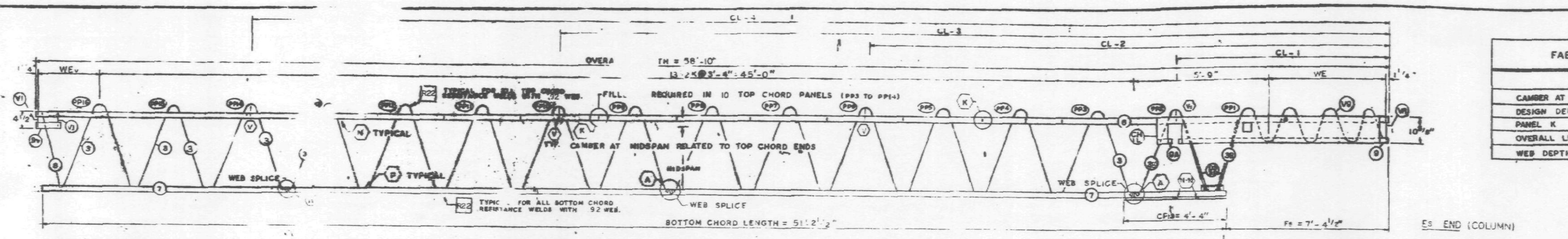

EL END (CORE)

TRUSS ELEVATION

Es END (COLUMN)

FABRICATION REQUIRE[D]	DESIGN	TOLERANCE
CAMBER AT MIDSPAN	1 11/16"	± 3/8"
DESIGN DEPTH	29"	± 1/4"
PANEL K	3'-4"	± 1/4"
OVERALL LENGTH	58'-10"	± 3/8"
WEB DEPTH	31 7/8"	± 1/4"

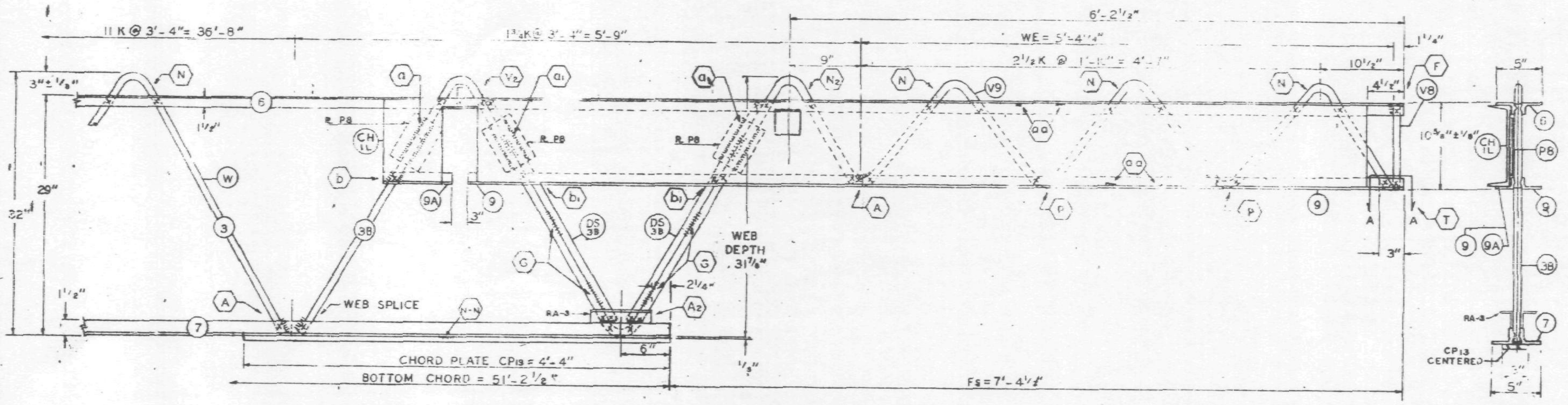

Es END (COLUMN)

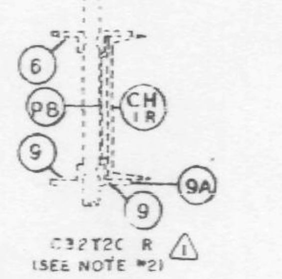

CH1 PLACED AS SHOWN FOR C32T20 R ⚠1
CH1 PLACED AS SHOWN FOR C32T20 L

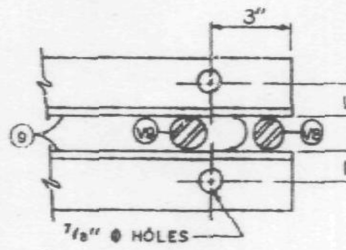

SECTION A-A

ALL PANEL POINTS RESISTANCE WELDED. (x).
ARC WELDS INDICATED AT SHADED AREAS
AND AT BOTTOM CHORD WEB SPLICES.
LETTERS IN HEXAGON INDICATE WELD DETAIL, ie., ⟨A⟩.
LETTERS AND NUMBERS IN SQUARES INDICATE
RESISTANCE WELD STRENGTH IDENTIFIED IN THE
QUALITY CONTROL PROGRAM, ie., [R9].
ALL WELD DETAILS SHOWN ON SHEETS ST290, ST291,
ST 292 AND, ST 293.
ALL CHANNEL DETAILS SHOWN ON SHEET ST 407.
CHORD PLATE DETAILS SHOWN ON SHEET ST 283.
SEE SHEET ST 295 FOR VI DETAIL.

NOTE 2

ALL DETAILS & ELEVATIONS SHOWN FOR C32T20 L ⚠1
TRUSSES ARE APPLICABLE TO C32T20 R TRUSSES
WITH CHANNEL CH1R AND BEARING ANGLE 9A
PLACED ON OPP. HAND AS SHOWN.

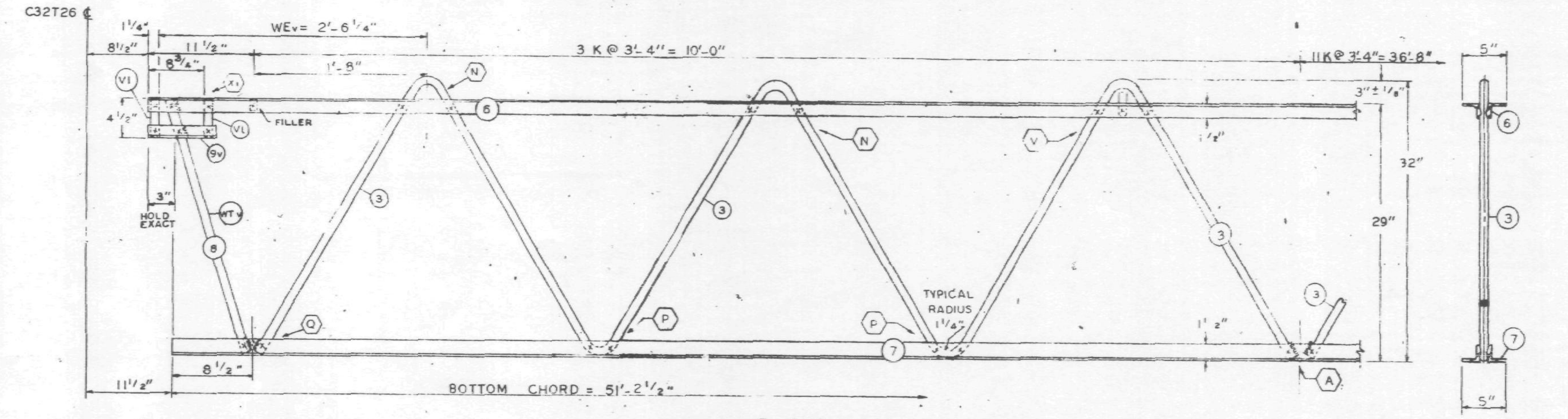

EL END (CORE)

NO	DATE	REVISION	BY
⚠1	11-7-68	AS NOTED	G.D.C.

⚠1 REF. DRWG.

7-AB1-19	10-4-68
7-AB1-54	10-4-68
7-AB1-53	7-22-68
7-AB3-2	1-3-68
7-AB3-24	8-15-68
7-AB4-17 & 17.2	10-4-68
SA-124	10-11-68
7-AB1-13.1	7-22-68
7-AB1-55	10-15-68

PAINT

LACLEDE ELECTROCOAT
RED NO. 10001

TRUSS DESIGNATION	TOP CHORD TWO ANGLES				BOTTOM CHORD TWO ANGLES				MAIN WEB "W"					FILLER		"M" C/C HOLES	CHORD PLATE				CONNECTION FILLERS			CHANNEL PLATES					REINFORCING ANGLES (2 REQ'D)				TRUSS DATA
⚠1	MK.	TYPE STEEL	CHORD SIZE	LENGTH	MK.	TYPE STEEL	CHORD SIZE	LENGTH	MK.	TYPE STEEL	DIA.	LENGTH	NO. OF K	NO.	DIA.		MK.	TYPE STEEL	SIZE	LENGTH	NO.	DIA.	LENGTH	MK.	TYPE STEEL	PCS.	SIZE	LENGTH	MK.	TYPE STEEL	SIZE	LENGTH	
C32T20 L-5810	6	A242	2"x1 1/2"x.25"	58'-10"	7	A242	2"x1 1/2"x.25"	51'-2 1/2"	3 3B	A242 A242	.92 .92	57'-2 1/2" 10'-7 5/8"	14 K@3'-4"=46'-8" 1 3/4 K@3'-4"=5'-9"	11	.92"	—	—	—	—	— —	4	.92	3"	F8	A36	3	4 1/2"x39	5 1/2"	RA-3	A242	2"x1 1/2"x.25	7 1/2"	

COLUMN END

Es END	TRUSS DESIGNATION	BEARING ANGLES					WE	DOUBLE STRUT				CHORD PLATE				END STIFFENER MK. V8			MK. V9			MK. V10			CHANNEL			
	⚠1	MK.	TYPE STEEL	CHORD SIZE	PCS.	LENGTH		MK.	TYPE STEEL	DIA.	LENGTH (2 REQ'D)	MK.	TYPE STEEL	SIZE	LENGTH	TYPE STEEL	DIA.	LENGTH	TYPE STEEL	DIA.	LENGTH	TYPE STEEL	DIA.	LENGTH	MK.	TYPE STEEL	CHANNEL SIZE	LENGTH
	C32T20 L-5810	9 9A	A242 A242	2"x1 1/2"x.25" 2"x1 1/2"x.25"	2 1	9'-5" 8 1/2"	5'-4 1/4"	DS13	A242	.92	2'-6 3/4"	CP13	A36	3"x.25"	4'-4"	A242	.92	10 1/2"	A242	.92	8'-3 7/8"	—	—	—	CH1L CH1R	A36 A36	10 30 10 30	10'-0" 10'-0"

CHECK DIMENSION FOR TRUSS FAB.

LOCATION OF TRANS. TRUSS				
CL-1	CL-2	CL-3	CL-4	Fs
9'-6 1/2"	22'-10 1/2"	36'-2 1/2"	49'-6 1/2"	7'-4 1/2"

CORE END

EL END	TRUSS DESIGNATION	BEARING ANGLES				WE	DIAGONAL "Tv" STRUT				VERTICAL "STv" STRUT				END STIFFENER (2 REQ'D) MK. V1			MK. V2			MK. V4			DOUBLE STRUT				DOUBLE STRUT			
	⚠1	MK.	TYPE STEEL	CHORD SIZE	LENGTH		MK.	TYPE STEEL	DIA.	LENGTH	MK.	TYPE STEEL	DIA.	LENGTH	TYPE STEEL	DIA.	LENGTH		DIA.	LENGTH	TYPE STEEL	DIA.	LENGTH	MK.	TYPE STEEL	DIA.	LENGTH	MK.	TYPE STEEL	DIA.	LENGTH
	C32T20 L-5810	9V	A242	2"x1 1/2"x.25	10"	2'-6 1/4"	8	A242	.92	2'-5 3/4"	—	—	—	—	A242	.92	4 3/8"	—	—	—	—	—	—	—	—	—	—	—	—	—	—

FLOOR TRUSS DETAILS
FOR
WORLD TRADE CENTER - N.Y.C.
FOR
THE PORT OF NEW YORK AUTHORITY

FLOOR TRUSS C32T20-L ⚠1 (SEE NOTE 2) x 58'-10"

WORLD TRADE CENTER TOWERS A & B

FABRICATION BY LACLEDE STEEL COMPANY

FABRICATED AT MADISON, ILLINOIS		DESIGN DRAWING NO. 7-AB1-19	PLATE
APPROVED FOR FABRICATION BY: FOR P.O.N.Y.A.	DATE 11/18/68	DRAWN BY: gdc DATE OCT. 8, 1968	
APPROVED FOR FABRICATION BY: FOR FABRICATOR	DATE	CHECKED BY: T.M.CHURA DATE OCT. 10, 1968	IN CHARGE OF PROD. DEV.
DETAILED BY: A CARL WEBER		FABRICATION CONT. NO. W.T.C. 221	SHEET NO. ⚠1 ST 220-1

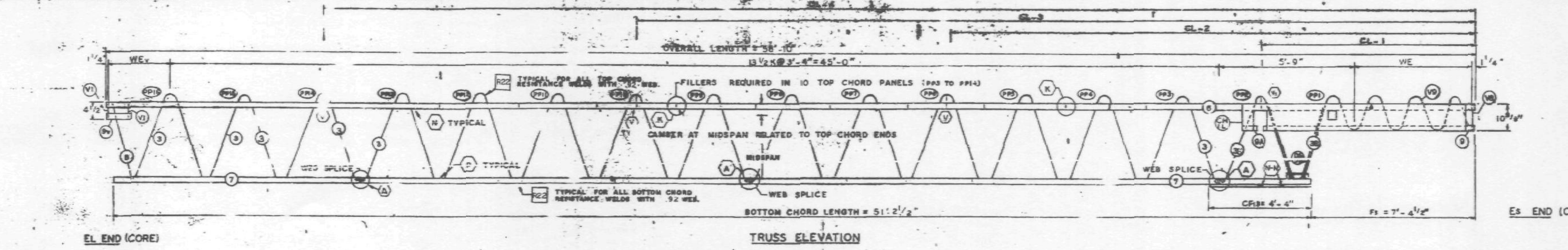

EL END (CORE)

TRUSS ELEVATION

ES END (COLUMN)

FABRICATION REQUIREMENTS	DESIGN	TOLERANCE
CAMBER AT MIDSPAN	1 11/16"	± 3/8"
DESIGN DEPTH	29"	± 1/4"
PANEL K	3'-4"	± 1/4"
OVERALL LENGTH	58'-10"	± 3/8"
WEB DEPTH	31 7/8"	± 1/4"

ALL PANEL POINTS RESISTANCE WELDED. (X).
ARC WELDS INDICATED AT SHADED AREAS AND AT BOTTOM CHORD WEB SPLICES.
LETTERS IN HEXAGON INDICATE WELD DETAIL, ie., (A).
LETTERS AND NUMBERS IN SQUARES INDICATE RESISTANCE WELD STRENGTH IDENTIFIED IN THE QUALITY CONTROL PROGRAM, ie., [R9].
ALL WELD DETAILS SHOWN ON SHEETS ST290, ST291, ST292 AND ST293.
ALL CHANNEL DETAILS SHOWN ON SHEET ST407.
CHORD PLATE DETAILS SHOWN ON SHEET ST283.
SEE SHEET ST295 FOR VI DETAIL.

NOTE 2

ALL DETAILS & ELEVATIONS SHOWN FOR C32T20AL TRUSSES ARE APPLICABLE TO C32T20AR TRUSSES WITH CHANNEL CH1R AND BEARING ANGLE 9A PLACED ON OPP. HAND AS SHOWN.

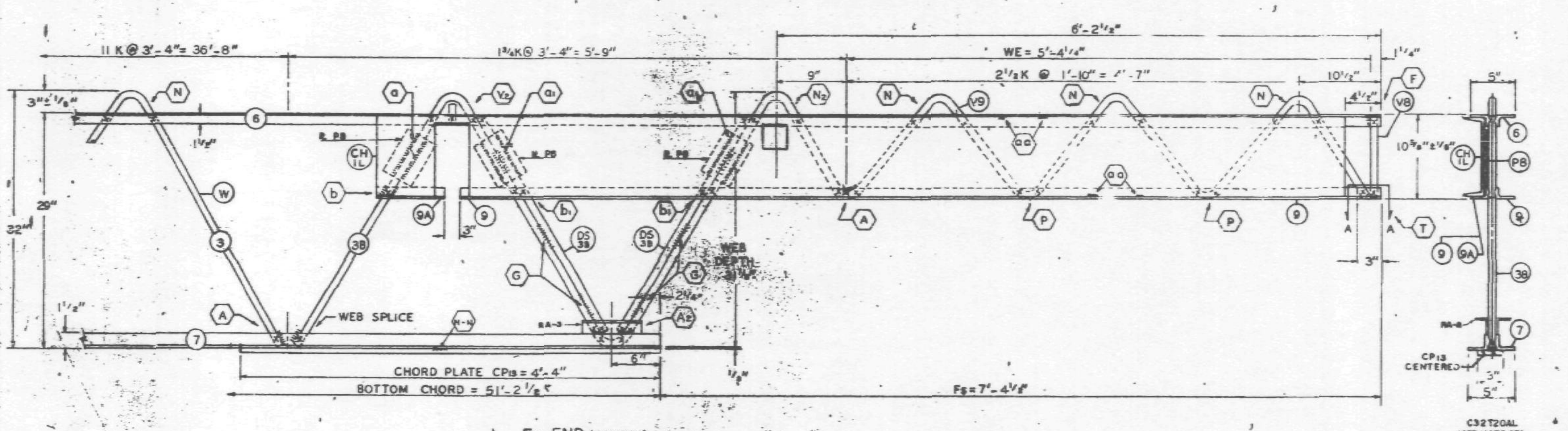

ES END (COLUMN)

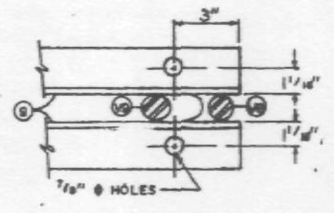

SECTION A-A

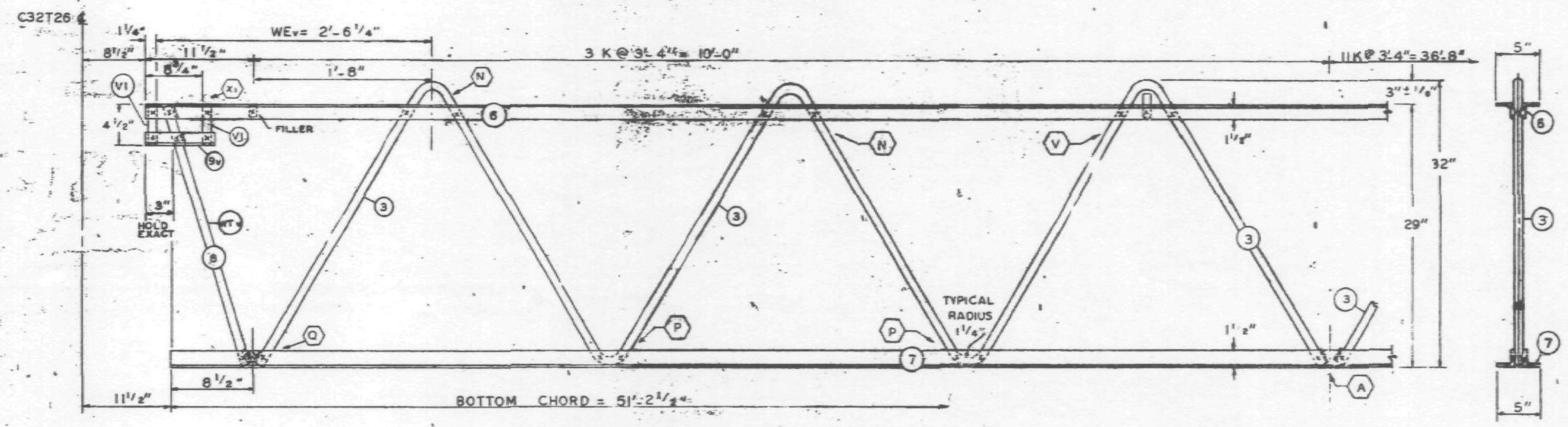

EL END (CORE)

NO	DATE	REVISION	BY

REF. DRWG.

7-AB1-19	8-15-68
7-AB1-34	8-15-68
7-AB1-5A & 55	7-22-68
7-AB3-2	1-3-68
7-AB3-24	8-15-68
7-AB4-17 & 17.2	8-15-68
SA-124	8-1-68
7-AB1-13.1	7-22-68

PAINT
LACLEDE ELECTROCOAT
RED NO. 10001

TRUSS DESIGNATION	TOP CHORD TWO ANGLES				BOTTOM CHORD TWO ANGLES				MAIN WEB "W"					FILLER		"M" C/C HOLES	CHORD PLATE				CONNECTION FILLERS			CHANNEL PLATES					REINFORCING ANGLES (2 REQ'D)				TRUSS DATA
	MK.	TYPE STEEL	CHORD SIZE	LENGTH	MK.	TYPE STEEL	CHORD SIZE	LENGTH	MK.	TYPE STEEL	DIA.	LENGTH	NO. OF K	NO.	DIA.		MK.	TYPE STEEL	SIZE	LENGTH	NO.	DIA.	LENGTH	MK.	TYPE STEEL	PCS.	SIZE	LENGTH	MK.	TYPE STEEL	SIZE	LENGTH	
C32T20AL-5810	6	A242	2"x1 1/2"x.25"	58'-10"	7	A242	2"x1 1/2"x.25"	51'-2 1/2"	3 3B	A242 A242	.92 .92	87'-2 1/2" 10'-7 3/8"	14 K@3'-4"=46'-8" 3.4K@3'-4"= 5'-8"	11	.92	—	—	—	—	—	4	.92	3"	P8	A36	3	4 1/2"x38	5 1/2"	RA3	A242	2"x1 1/2"x 25	7 1/2"	

COLUMN END

ES END	TRUSS DESIGNATION	BEARING ANGLES					WE	DOUBLE STRUT				CHORD PLATE				END STIFFENER MK. V8			END STIFFENER MK. V9			END STIFFENER MK. V10			CHANNEL			
		MK.	TYPE STEEL	CHORD SIZE	PCS.	LENGTH		MK.	TYPE STEEL	DIA.	LENGTH (2 REQ'D)	MK.	TYPE STEEL	SIZE	LENGTH	TYPE STEEL	DIA.	LENGTH	TYPE STEEL	DIA.	LENGTH	TYPE STEEL	DIA.	LENGTH	MK.	TYPE STEEL	CHANNEL SIZE	LENGTH
	C32T20AL-5810	9 9A	A242 A242	2"x1 1/2"x.25" 2"x1 1/2"x.25"	2 1	9'-5" 8 1/2"	5'-4 1/4"	DS	A242	.92	2'-6 3/4"	CP13	A36	3"x.25"	4'-4"	A242	.92	10 1/2"	A242	.92	8'-3 7/8"	—	—	—	CH1L CH1R	A36 A36	10 C 30 10 C 30	10'-0" 10'-0"

CHECK DIMENSION FOR TRUSS FAB.

LOCATION OF TRANS. TRUSS				
CL-1	CL-2	CL-3	CL-4	Fs
9'-6 1/2"	22'-10 1/2"	36'-2 1/2"	49'-6 1/2"	7'-4 1/2"

CORE END

EL END	TRUSS DESIGNATION	BEARING ANGLES				WEv	DIAGONAL "Tv" STRUT				VERTICAL "STv" STRUT				END STIFFENER (2 REQ'D) MK. V1			MK. V2			MK. V4			DOUBLE STRUT				DOUBLE STRUT			
		MK.	TYPE STEEL	CHORD SIZE	LENGTH		MK.	TYPE STEEL	DIA.	LENGTH	MK.	TYPE STEEL	DIA.	LENGTH	TYPE STEEL	DIA.	LENGTH	TYPE STEEL	DIA.	LENGTH	TYPE STEEL	DIA.	LENGTH	MK.	TYPE STEEL	DIA.	LENGTH	MK.	TYPE STEEL	DIA.	LENGTH
	C32T20AL-5810	9v	A242	2"x1 1/2"x .25	10"	2'-6 1/4	8	A242	.92	2'-5 3/4"	—	—	—	—	A242	.92	4 3/8"	—	—	—	—	—	—	—	—	—	—	—	—	—	—

FLOOR TRUSS DETAILS
FOR
WORLD TRADE CENTER - N.Y.C.
FOR
THE PORT OF NEW YORK AUTHORITY

FLOOR TRUSS C32T20AL (SEE NOTE 2) x 58'-10"
WORLD TRADE CENTER TOWERS A & B

FABRICATION BY LACLEDE STEEL COMPANY

FABRICATED AT MADISON, ILLINOIS		DESIGN DRAWING NO. 7-AB1-19	PLATE
APPROVED FOR FABRICATION BY: James White FOR P.O.N.Y.A.	DATE 10/29/68	DRAWN BY: gdc DATE OCT. 8, 1968	
APPROVED FOR FABRICATION BY: FOR FABRICATOR	DATE	CHECKED BY: T.M.CHURA DATE OCT. 10, 1968	IN CHARGE OF PROD. DEV.
DETAILED BY: A CARL WEBER		FABRICATION CONT. NO. W.T.C. 221	SHEET NO. ST 220AL

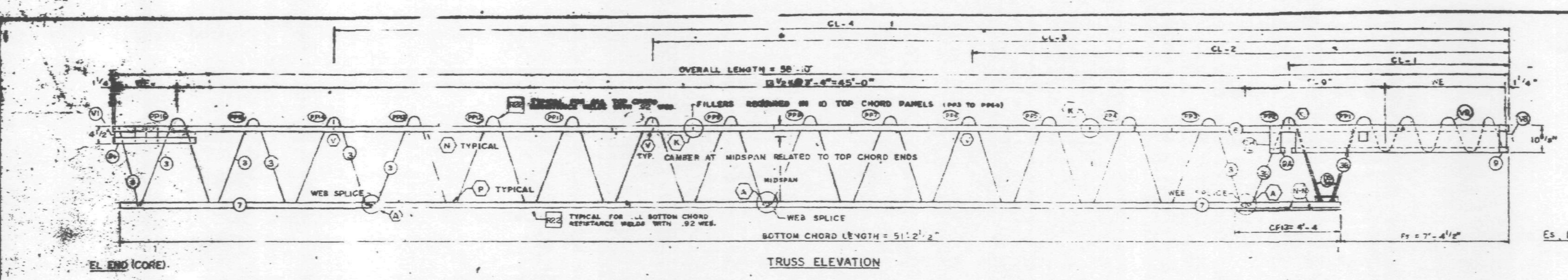

FABRICATION REQUIREMENTS	
CAMBER AT MIDSPAN	
DESIGN DEPTH	
PANEL K	4"
OVERALL LENGTH	58'-10"
WEB DEPTH	31 7/8" ± 1/4"

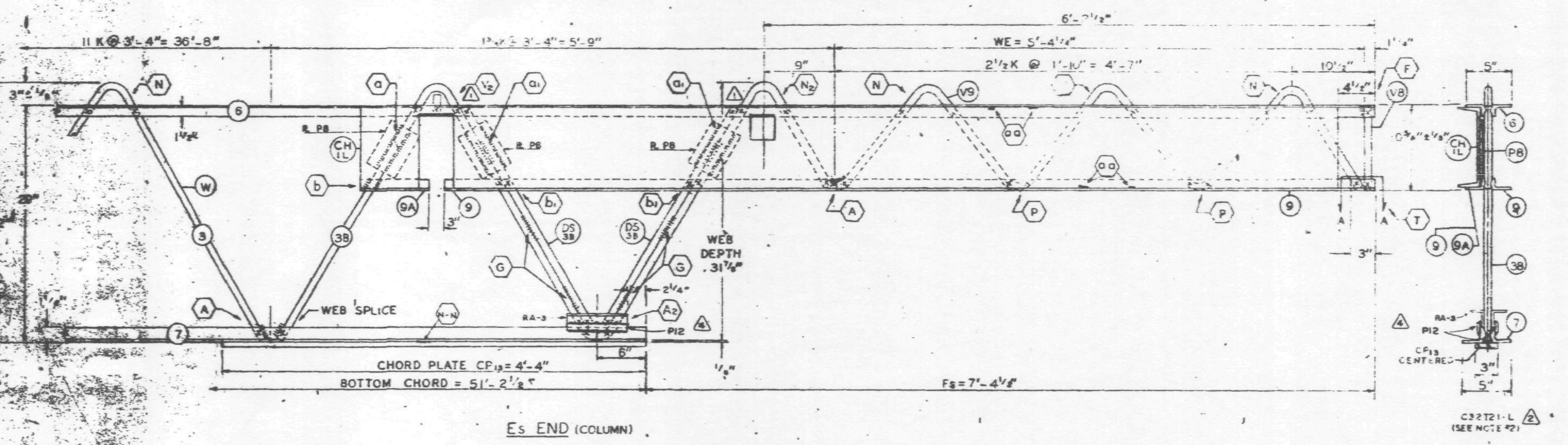

ALL PANEL POINTS RESISTANCE WELDED (X).
ARC WELDS INDICATED AT SHADED AREAS
AND AT BOTTOM CHORD WEB SPLICES
LETTERS IN HEXAGON INDICATE WELD DETAIL
LETTERS AND NUMBERS IN SQUARES INDICATE
RESISTANCE WELD STRENGTH IDENTIFIED IN THE
QUALITY CONTROL PROGRAM.
ALL WELD DETAILS SHOWN ON
ST 292 AND ST 293.
ALL CHANNEL DETAILS SHOWN ON SHEET
CHORD PLATE DETAILS SHOWN ON SHEET
SEE SHEET ST 295 FOR VI DETAIL.

NOTE 2

ALL DETAILS & ELEVATIONS SHOWN FOR C32T21-L TRUSSES ARE APPLICABLE TO C32T21-R TRUSSES WITH CHANNEL CH1R AND BEARING ANGLE 9A PLACED ON OPP. HAND AS SHOWN.

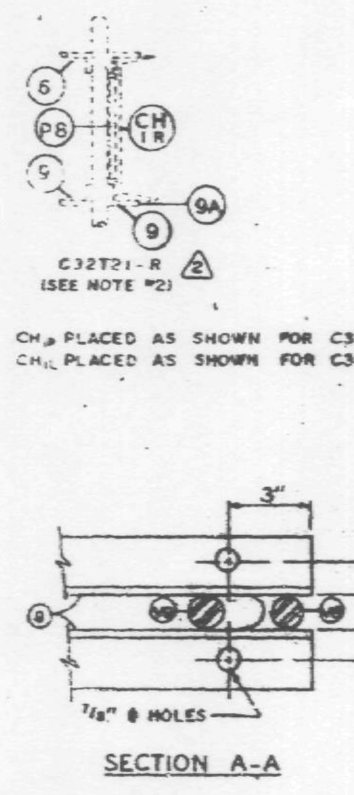

NO	DATE	REVISION
4	12-28-68	AS NOTED
3	12-3-68	AS NOTED
2	11-7-68	AS NOTED
1	10-31-68	AS NOTED

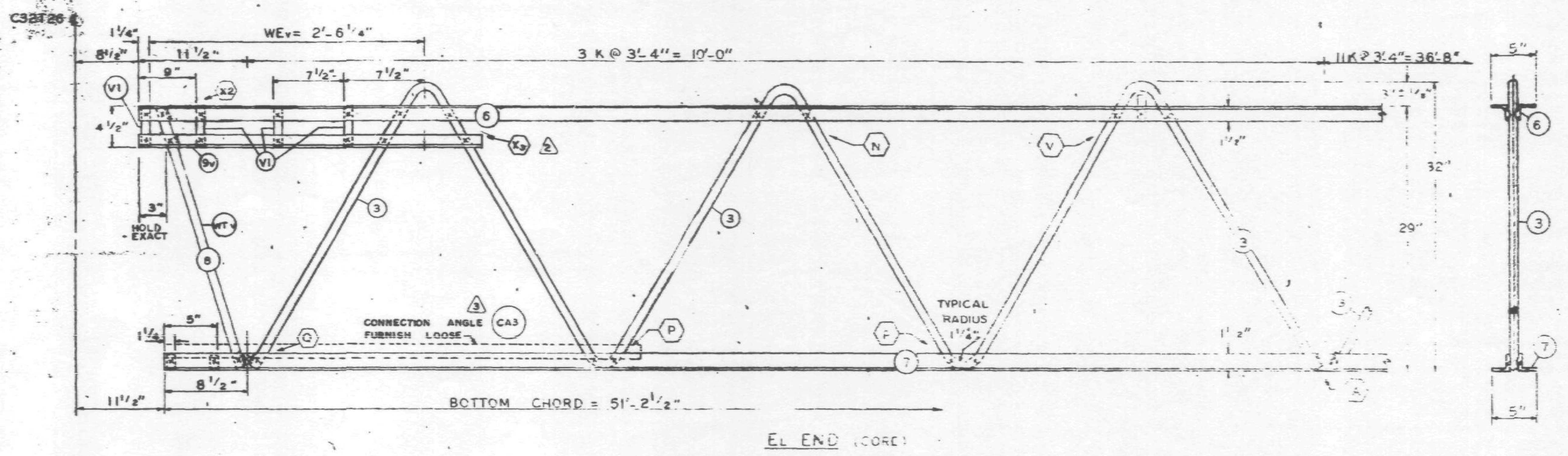

REF. DRWG.

7-AB1-20	10-4-68
7-AB1-54	11-25-68
7-AB1-58	7-29-68
7-AB3-2	1-3-69
7-AB3-24	8-13-68
7-AB4-17 & 17.2	10-4-68
SA-124	10-11-68
7-AB4-1L2	7-26-68

PAINT
LACLEDE ELECTROCOAT
RED NO. 10001

TRUSS DESIGNATION	TOP CHORD TWO ANGLES				BOTTOM CHORD TWO ANGLES				MAIN WEB "W"					FILLER		"M" ⌀ HOLES	CHORD PLATE				CHANNEL PLATES				REINFORCING ANGLES				SPECIAL PLATES			
(2)	MK	TYPE STEEL	CHORD SIZE	LENGTH	MK	TYPE STEEL	CHORD SIZE	LENGTH	MK	TYPE STEEL	DIA.	LENGTH	NO. OF K	NO.	DIA.		MK	TYPE STEEL	SIZE	LENGTH	MK	TYPE STEEL	SIZE	LENGTH	MK	TYPE STEEL	ANGLE SIZE	(2 REQ'D) LENGTH	MK	TYPE STEEL	SIZE	(2 REQ'D) LENGTH
C32T21-L-5810	6	A242	2"x1 1/2"x.25"	58'-10"	7	A242	2"x1 1/2"x.25"	51'-2 1/2"	3	A242	.92	37'-2 1/2"	14 K @ 3'-4" = 46'-8"	12	.92	—	—	—	—	—	[illegible]	A36	[illegible] 4"x39	[illegible]	RA3	A242	2"x1 1/2"x.25"	7 1/2"	P12	A36	1"x3/8"	7 1/2"
									38	A242	.92	10'-7 5/8"	1 3/4 K @ 3'-4" = 5'-9"																			

COLUMN END Es END	TRUSS DESIGNATION	BEARING ANGLES					WE	DOUBLE STRUT				CHORD PLATE				END STIFFENER MK. V8			END STIFFENER MK. V9			MK. V10			CHANNEL			
	(2)	MK	TYPE STEEL	CHORD SIZE	PCS.	LENGTH		MK	TYPE STEEL	DIA	LENGTH (2 REQ'D)	MK	TYPE STEEL	SIZE	LENGTH	TYPE STEEL	DIA.	LENGTH	TYPE STEEL	DIA.	LENGTH	TYPE STEEL	DIA.	LENGTH	MK	TYPE STEEL	CHANNEL SIZE	LENGTH
	C32T21-L-5810	9	A242	2"x1 1/2"x.25"	2	9'-5"	5'-4 1/4"	DS38	A242	.92	2'-6 3/4"	CP13	A36	3"x.25"	4'-4"	A242	.92	10 1/2"	A242	.92	8'-3 7/8"	—	—	—	CH1L	A36	10 [illegible] 30	10'-0"
		9A	A242	2"x1 1/2"x.25"	1	8 1/2"																			CH1R	A36	10 [illegible] 30	10'-0"

CHECK DIMENSION FOR TRUSS FAB.

LOCATION OF TRANS. TRUSS				
CL-1	CL-2	CL-3	CL-4	Fs
9'-6 1/2"	22'-10 1/2"	36'-2 1/2"	49'-6 1/2"	7'-4 1/2"

CORE END El END	TRUSS DESIGNATION	BEARING ANGLES				WEv	DIAGONAL "Tv" STRUT				VERTICAL "STv" STRUT				END STIFFENER (4 REQ'D) MK. V1			MK. V2			MK. V4			DOUBLE STRUT				DOUBLE STRUT				CONNECTION ANGLE				
	(2)	MK	TYPE STEEL	CHORD SIZE	LENGTH		MK	TYPE STEEL	DIA.	LENGTH	MK	TYPE STEEL	DIA.	LENGTH	TYPE STEEL	DIA.	LENGTH	TYPE STEEL	DIA.	LENGTH	TYPE STEEL	DIA.	LENGTH	MK	TYPE STEEL	DIA.	LENGTH	MK	TYPE STEEL	DIA.	LENGTH	NO	MK	TYPE STEEL	ANGLE SIZE	LENGTH
	C32T21-L-5810	9v	A242	2"x1 1/2"x.31	3'-2"	2'-6 1/4"	8	A242	.92	2'-5 3/4"	—	—	—	—	A242	.92	4 3/8"	—	—	—	—	—	—	—	—	—	—	—	—	—	—	2	CA-3	A242	2"x1 1/2"x.31	4'-4"

FLOOR TRUSS DETAILS
FOR
WORLD TRADE CENTER - N.Y.C.
FOR
THE PORT OF NEW YORK AUTHORITY

FLOOR TRUSS C32T21-L (2) (SEE NOTE 2) x 58'-10"
WORLD TRADE CENTER TOWERS A & B

FABRICATION BY LACLEDE STEEL COMPANY

FABRICATED AT MADISON, ILLINOIS		DESIGN DRAWING NO. 7-AB1-20	PLATE
APPROVED FOR FABRICATION FOR P.O.N.Y.A James White	DATE 1/13/69	DRAWN BY: ADC DATE OCT. 8, 1968	
APPROVED FOR FABRICATION BY ______ FOR FABRICATOR	DATE	CHECKED BY: T.H.CHIEN DATE OCT. 10, 1968	IN CHARGE
DETAILED BY: A CARL WEBER		FABRICATION CONT. NO. W.T.C. 221	SHEET ST 221

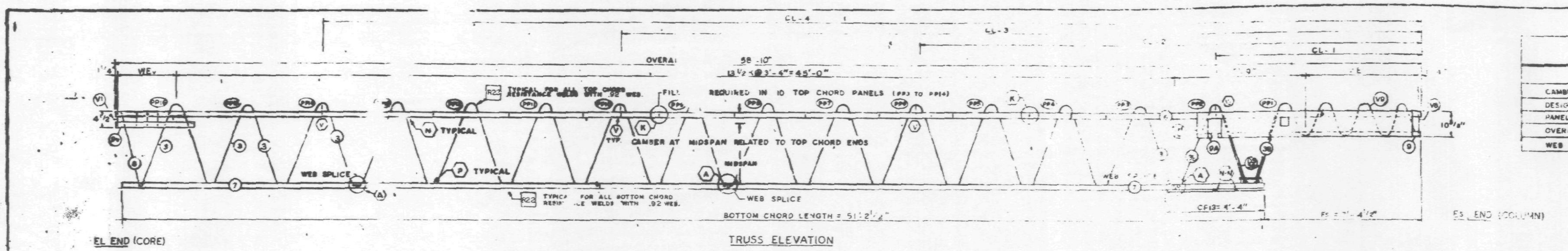

EL END (CORE)

TRUSS ELEVATION

ES END (COLUMN)

FABRICATION REQUIRE	DESIGN	TOLERANCE
CAMBER AT MIDSPAN	1 3/8"	± 3/8"
DESIGN DEPTH	29"	± 1/4"
PANEL K	3'-4"	± 1/4"
OVERALL LENGTH	58'-10	± 3/8"
WEB DEPTH	31 7/8"	± 1/4"

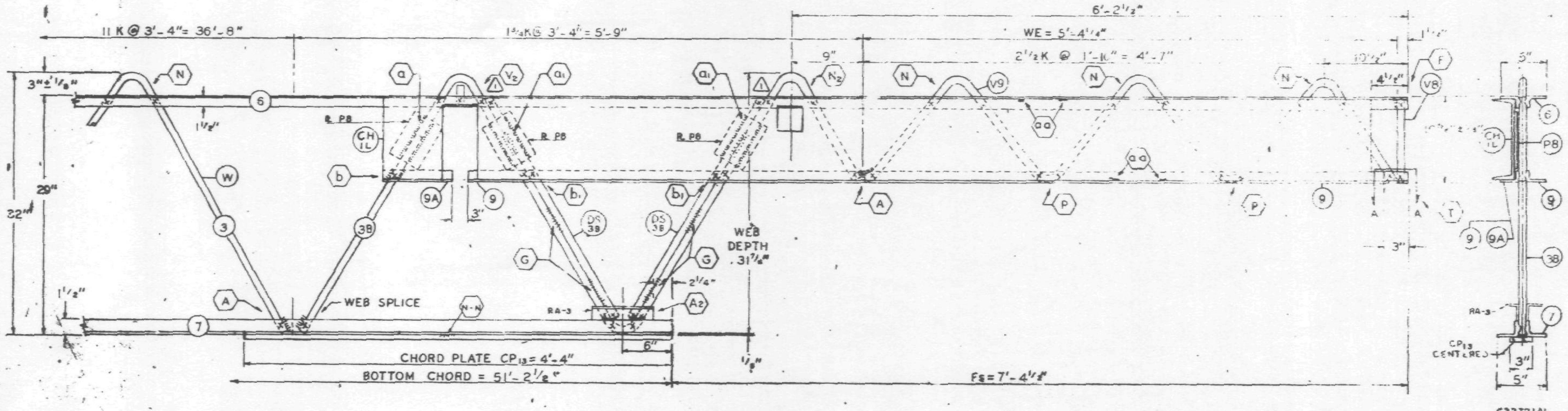

Es END (COLUMN)

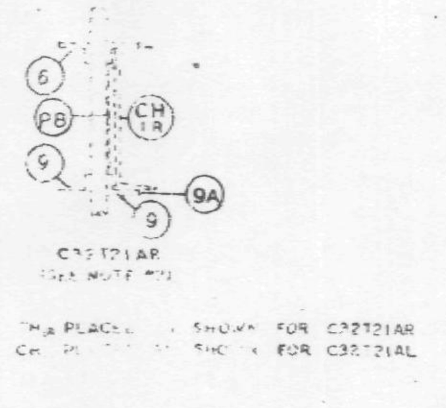

C32T21AL (SEE NOTE #2)

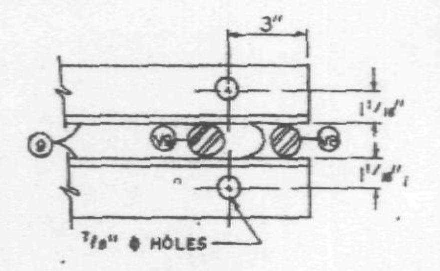

SECTION A-A

ALL PANEL POINTS RESISTANCE WELDED. (x).
ARC WELDS INDICATED AT SHADED AREAS AND AT BOTTOM CHORD WEB SPLICES.
LETTERS IN HEXAGON INDICATE WELD DETAIL, ie., (A).
LETTERS AND NUMBERS IN SQUARES INDICATE RESISTANCE WELD STRENGTH IDENTIFIED IN THE QUALITY CONTROL PROGRAM, ie., [R9].
ALL WELD DETAILS SHOWN ON SHEETS ST290, ST291, ST292 AND ST293.
CHANNEL DETAILS SHOWN ON SHEET ST 407.
RE. PLATE DETAILS SHOWN ON SHEET ST 283.
SEE SHEET ST 295 FOR VI DETAIL.

NOTE 2

ALL DETAILS & ELEVATIONS SHOWN FOR C32T21AL TRUSSES ARE APPLICABLE TO C32T21AR TRUSSES WITH CHANNEL CHIR AND BEARING ANGLE 9A PLACED ON OPP. HAND AS SHOWN.

NO	DATE	REVISION	BY
1	10-31-68	AS NOTED	LWH

REF. DRWG.

7-AB1-20	8-15-68
7-AB1-54	8-15-68
7-AB1-53 & 55	7-22-68
7-AB3-2	1-3-68
7-AB3-24	8-15-68
7-AB4-17 & 17.2	8-15-68
SA-124	8-1-68
7-AB1-11.2	7-22-68

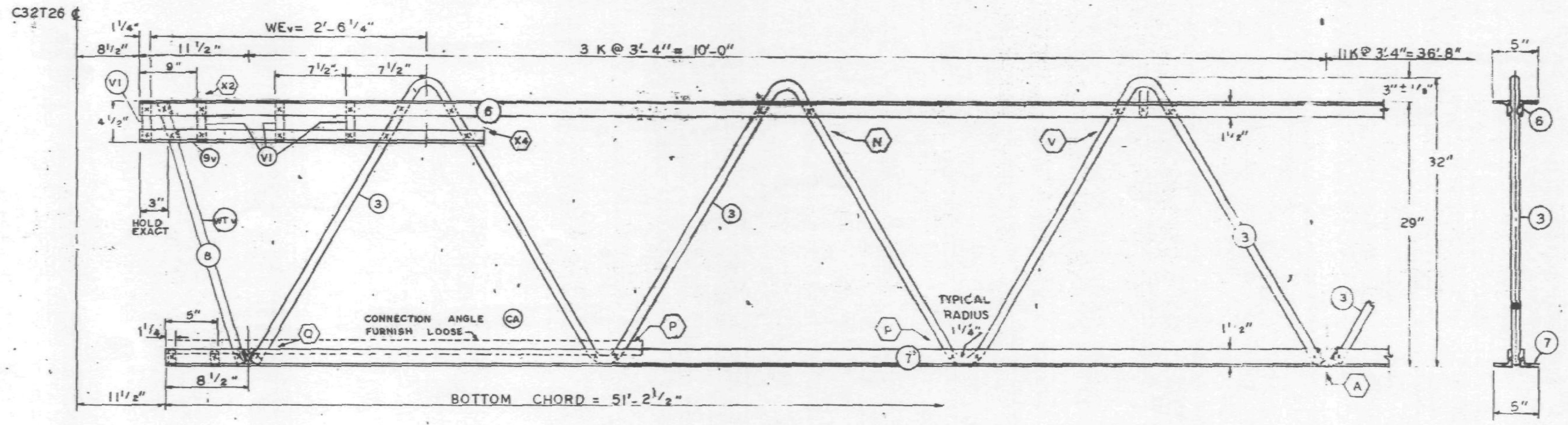

EL END (CORE)

TRUSS DESIGNATION	TOP CHORD TWO ANGLES				BOTTOM CHORD TWO ANGLES				MAIN WEB "W"					FILLER		"M" C/C HOLES	CHORD PLATE				CONNECTION FILLERS			CHANNEL PLATES					REINFORCING ANGLES (2 REQ'D)				TRUSS DATA
	MK	TYPE STEEL	CHORD SIZE	LENGTH	MK	TYPE STEEL	CHORD SIZE	LENGTH	MK	TYPE STEEL	DIA.	LENGTH	NO. OF K	NO.	DIA.		MK	TYPE STEEL	SIZE	LENGTH	NO	DIA	LENGTH	MK	TYPE STEEL	PCS	SIZE	LENGTH	MK	TYPE STEEL	SIZE	LENGTH	
C32T21AL-5810	6	A242	2"x1½"x.25"	58'-10"	7	A242	2"x1½"x.25"	51'-2½"	3 / 38	A242 / A242	.92 / .92	37'-2 1/2" / 10'-7 5/8"	14 K@3'-4"=46'-8" / 1¾K@3'-4"=5'-9"	12	.92	—	–	–	–	—	4	.92	3"	Pb	A36	3	4"2"x39	5'-[illegible]	RA3	A242	2"x1½"x.25	7½"	

COLUMN END

Es END	TRUSS DESIGNATION	BEARING ANGLES					WE	DOUBLE STRUT				CHORD PLATE				END STIFFENER MK. V8			MK. V9			MK. V10			CHANNEL			
		MK	TYPE STEEL	CHORD SIZE	PCS.	LENGTH		MK	TYPE STEEL	DIA	LENGTH (2 REQ'D)	MK	TYPE STEEL	SIZE	LENGTH	TYPE STEEL	DIA.	LENGTH	TYPE STEEL	DIA.	LENGTH	TYPE STEEL	DIA.	LENGTH	MK	TYPE STEEL	CHANNEL SIZE	LENGTH
	C32T21AL-5810	9 / 9A	A242 / A242	2"x1½"x.25" / 2"x1½"x.25"	2 / 1	9'-5" / 8½"	5'-4¼	DS	A242	.92	2'-6¾	CP13	A36	3"x.25"	4'-4"	A242	.92	10½"	A242	.92	8'-3⅞"	—	—	—	CHIL / CHIR	A36 / A36	10 30 / 10 30	10'-0" / 10'-0"

CHECK DIMENSION FOR TRUSS FAB.

LOCATION OF TRANS. TRUSS				
CL-1	CL-2	CL-3	CL-4	Fs
9'-6½"	22'-10½"	36'-2½"	49'-6½"	7'-4½"

CORE END

EL END	TRUSS DESIGNATION	BEARING ANGLES				WEv	DIAGONAL "Tv" STRUT				VERTICAL "STv" STRUT				END STIFFENER (4 REQ'D) MK. V1			MK. V2			MK. V4			DOUBLE STRUT				DOUBLE STRUT				CONNECTION ANGLE				
		MK	TYPE STEEL	CHORD SIZE	LENGTH		MK	TYPE STEEL	DIA.	LENGTH	MK.	TYPE STEEL	DIA.	LENGTH	TYPE STEEL	DIA.	LEN	TYPE STEEL	DIA	LENGTH	TYPE STEEL	DIA.	LENGTH	MK.	TYPE STEEL	DIA.	LENGTH	MK.	TYPE STEEL	DIA	LENGTH	NO	MK	TYPE STEEL	ANGLE SIZE	LENGTH
	C32T21AL-5810	9v	A242	2"x1½"x.31	3'-2"	2'-6¼	8	A242	.92	2'-5¾"	–	—	—	—	A242	.92	[illegible]	–	—	—	—	—	—	–	–	–	–	–	–	–	—	2	CA	A242	2"x1½"x.31	4'-4"

PAINT
LACLEDE ELECTROCOAT
RED NO. 10001

FLOOR TRUSS DETAILS
FOR
WORLD TRADE CENTER - N.Y.C.
FOR
THE PORT OF NEW YORK AUTHORITY

FLOOR TRUSS C32T21AL (SEE NOTE 2) x 58'-10"
WORLD TRADE CENTER TOWERS A & B

FABRICATION BY LACLEDE STEEL COMPANY
FABRICATED AT MADISON, ILLINOIS
DESIGN DRAWING NO. 7-AB1-20
PLATE
APPROVED FOR FABRICATION BY FOR P.O.N.Y.A. DATE 11/7/68
DRAWN BY gdc DATE OCT. 6, 1968
APPROVED FOR FABRICATION BY FOR FABRICATOR DATE
CHECKED BY T.M. CHURA DATE OCT 10, 1968
IN CHARGE OF PROD. DEV.
DETAILED BY A. CARL WEBER
FABRICATION CONT. NO. WTC 221
SHEET NO. ST 221

[redacted]

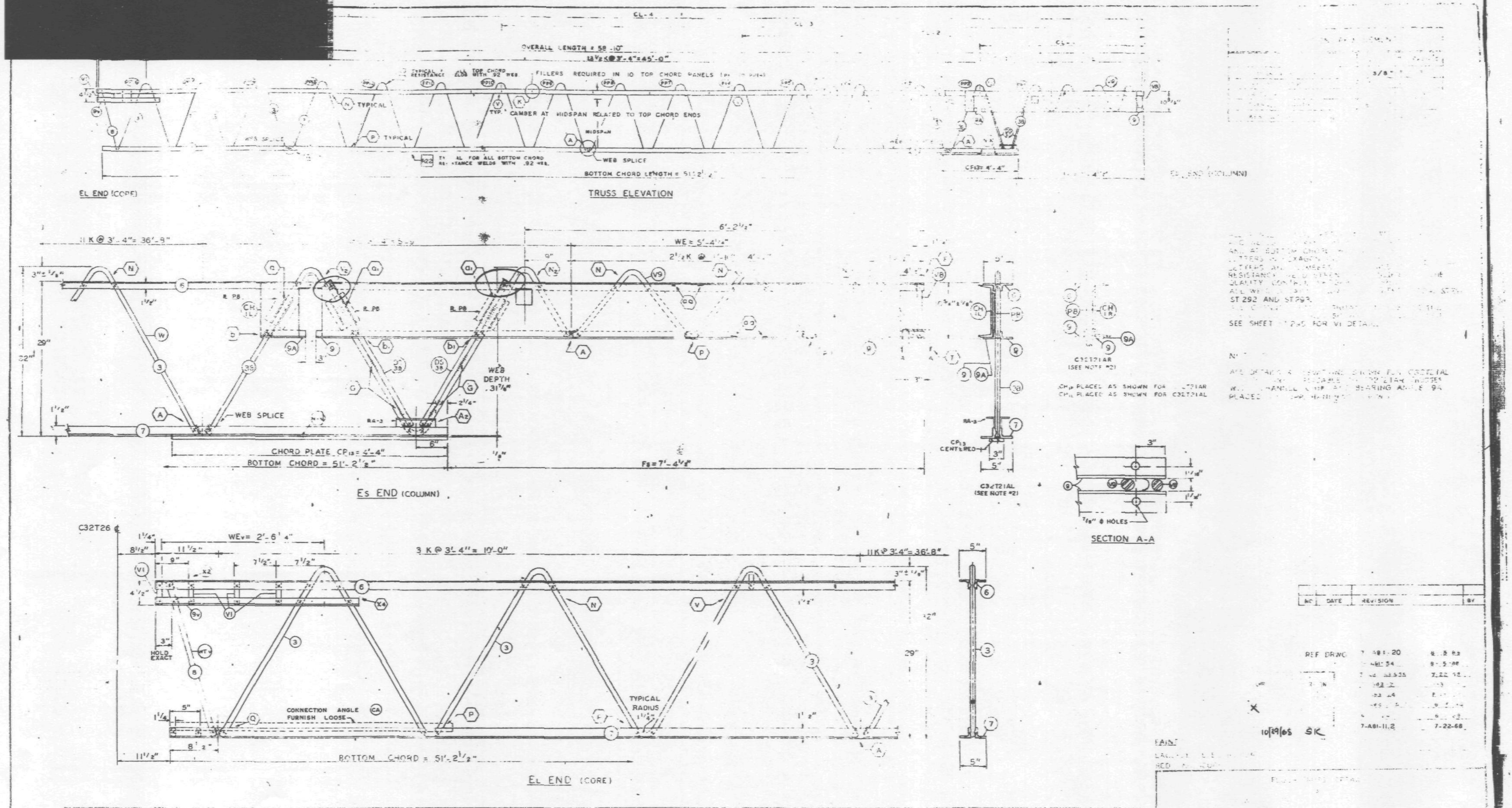

TRUSS DESIGNATION	TOP CHORD TWO ANGLES				BOTTOM CHORD TWO ANGLES				MAIN WEB "W"					FILLER		"M" C/C HOLES	CHORD PLATE				[illegible]				CHANNEL PLATES				REINFORCING ANGLES (2 REQ'D)				TRUSS DATA
	MK	TYPE STEEL	CHORD SIZE	LENGTH	MK	TYPE STEEL	CHORD SIZE	LENGTH	MK	TYPE STEEL	DIA	LENGTH	NO. OF K	NO.	DIA.		MK	TYPE STEEL	SIZE	LENGTH	[illegible]	[illegible]	[illegible]	[illegible]	[illegible]	[illegible]	[illegible]	[illegible]	MK	TYPE STEEL	[illegible]	[illegible]	
C32T21AL-5810	6	A242	2"x[illegible]x.25"	58'-10"	7	A242	2"x1½"x.25"	51'-2½"	3	A242	.92	87'-2½"	14 K @ 3'-4" = 46'-8"	12	.92"	—	—	—	—	—	4	.92	[illegible]	[illegible]	A36	3	[illegible]	[illegible]	RA3	A242	[illegible]	[illegible]	[illegible]
									38	A242	.92	10'-7⅝"	3 4K @ 3'-4" = 5'-9"																				

ES END	TRUSS DESIGNATION	BEARING ANGLES					WE	DOUBLE STRUT				CHORD PLATE				END STIFFENER MK. V8			END STIFFENER MK. V9			END STIFFENER MK. V10			CHANNEL			
		MK	TYPE STEEL	CHORD SIZE	PCS	LENGTH		MK	TYPE STEEL	DIA	LENGTH (2 REQ'D)	MK	TYPE STEEL	SIZE	LENGTH	TYPE STEEL	DIA.	LENGTH	TYPE STEEL	DIA.	LENGTH	TYPE STEEL	DIA.	LENGTH	MK	TYPE STEEL	CHANNEL SIZE	LENGTH
COLUMN END	C32T21AL-5810	9 / 9A	A242 / A242	[illegible]	[illegible]	[illegible] / 8'-1½"	5'-4¼"	[illegible]	A242	.92	2'-6¾"	CP13	A36	3"x.25"	4'-4"	A242	.92	10½"	A242	.92	8'-3⅞"	—	—	—	CH1 / CH2	A36 / A36	[illegible]	10'-0" / 10'-0"

CHECK DIMENSION FOR TRUSS FAB.

LOCATION OF TRANS. TRUSS				
CL-1	CL-2	CL-3	CL-4	FE
9'-6½"	22'-10½"	36'-2½"	49'-6½"	7'-4½"

EL END	TRUSS DESIGNATION	BEARING ANGLES				WEV	DIAGONAL "ST1" STRUT				VERTICAL "STV" STRUT				END STIFFENER (4 REQ'D) MK. V1			MK. V2			MK. V4			DOUBLE STRUT				DOUBLE STRUT				CONNECTION ANGLE				
		MK	TYPE STEEL	CHORD SIZE	LENGTH		MK	TYPE STEEL	DIA.	LENGTH	MK	TYPE STEEL	DIA.	LENGTH	TYPE STEEL	DIA.	LENGTH	TYPE STEEL	DIA.	LENGTH	TYPE STEEL	DIA	LENGTH	MK.	TYPE STEEL	DIA.	LENGTH	MK.	TYPE STEEL	DIA.	LENGTH	NO	MK	TYPE STEEL	ANGLE SIZE	LENGTH
CORE END	C32T21AL-5810	9V	A242	2"x1½"x.31	3'-2"	2'-6¼"	8	A242	.92	2'-5¾"	—	—	—	—	A242	.92	4⅜"	—	—	—	—	—	—	—	—	—	—	—	—	—	—	2	CA	A242	2"x1½"x.31	4'-4"

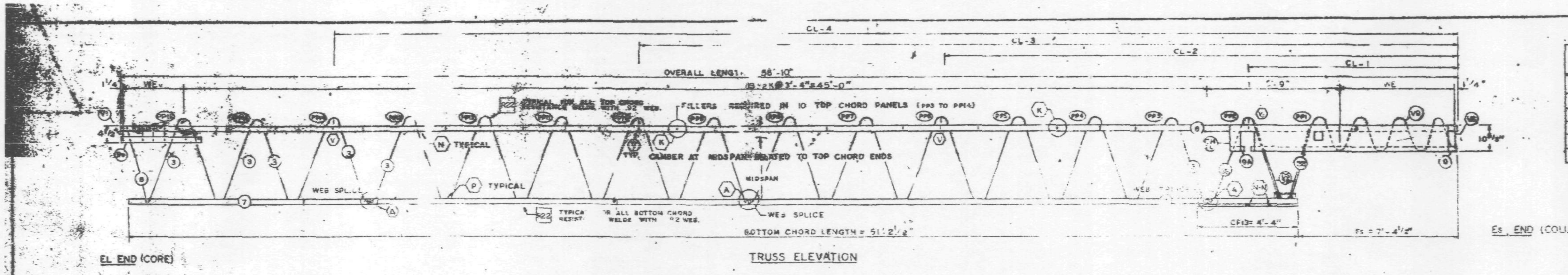

TRUSS ELEVATION

FABRICATION REQUIREMENTS	DESIGN	TOLERANCE
CAMBER AT MIDSPAN	1 3/8"	± [illegible]
DESIGN DEPTH	29"	± [illegible]
PANEL K	3'-4"	± [illegible]
OVERALL LENGTH	58'-[illegible]"	± [illegible]
WEB DEPTH	31	± [illegible]

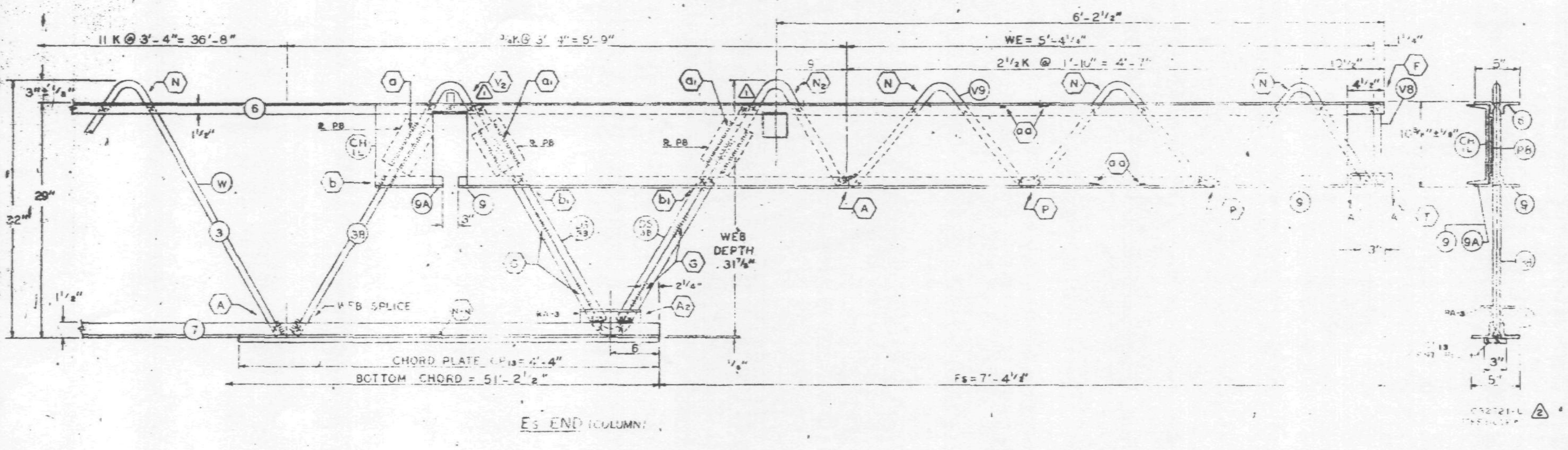

Es END (COLUMN)

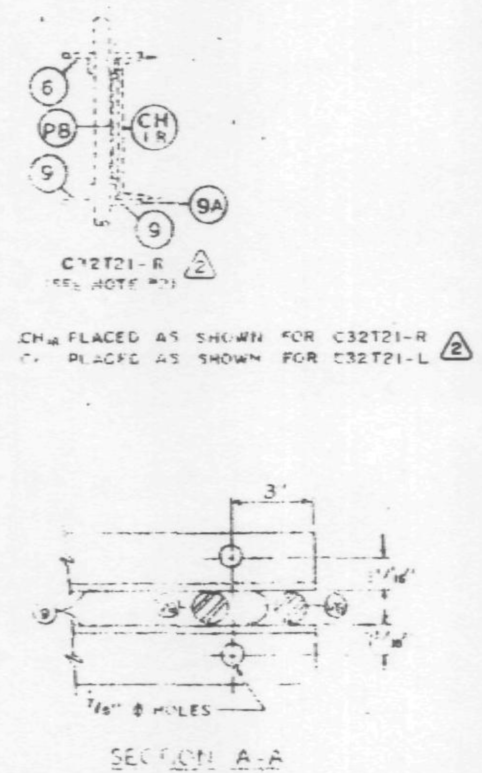

SECTION A-A

ALL PANEL POINTS RESISTANCE WELDED. (x).
ARC WELDS INDICATED AT SHADED AREAS AND AT BOTTOM CHORD WEB SPLICES.
LETTERS IN HEXAGON INDICATE WELD DETAIL, i.e., (A).
LETTERS AND NUMBERS IN SQUARES INDICATE RESISTANCE WELD STRENGTH IDENTIFIED IN THE QUALITY CONTROL PROGRAM, i.e., [RW].
ALL WELD DETAILS SHOWN ON SHEETS ST290, ST291, ST 292 AND ST293.
ALL CHANNEL DETAILS SHOWN ON SHEET ST 407.
CHORD PLATE DETAILS SHOWN ON SHEET ST 283.
SEE SHEET ST 295 FOR VI DETAIL.

NOTE 2

ALL DETAILS & ELEVATIONS SHOWN FOR C32T21-L (2) TRUSSES ARE APPLICABLE TO C32T21-R TRUSSES WITH CHANNEL CH18 AND BEARING ANGLE 9A PLACED ON OPP. HAND AS SHOWN.

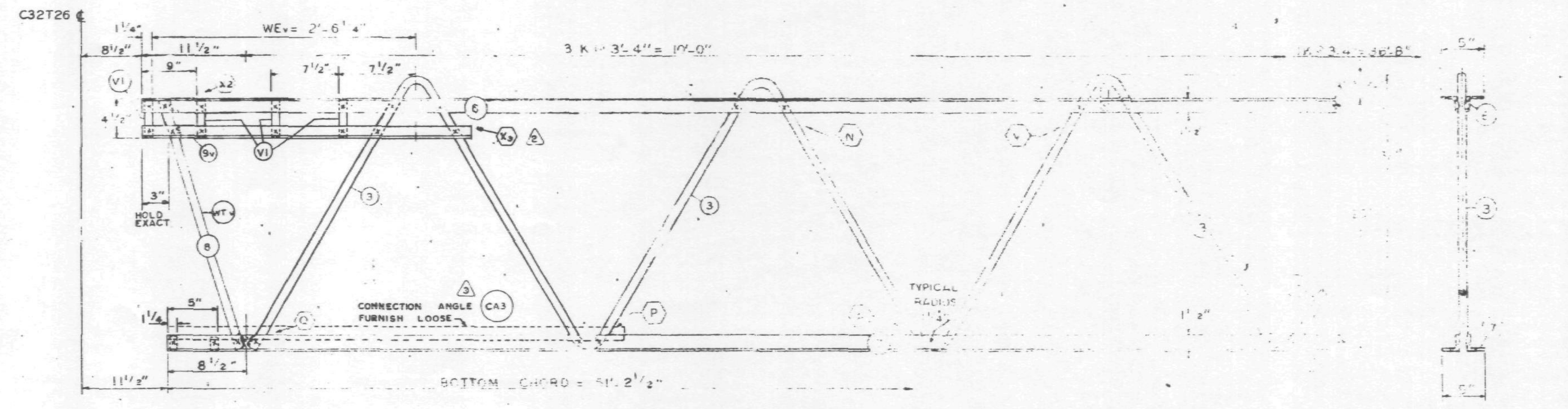

EL END (CORE)

NO	DATE	REVISION	BY
3	12-3-68	AS NOTED	G.D.C.
2	11-7-68	AS NOTED	G.D.C.
1	10-31-68	AS NOTED	L.W.H.

(3) REF. DRWG.

7-AB1-20	10-4-68
7-AB1-54	11-25-68
7-AB1-53	7-22-68
7-AB3-2	1-3-68
7-AB3-2A	8-15-68
7-AB4-17 & 17.2	10-4-68
[illegible]-124	10-11-68
7-AB4-1L2	7-22-68

TRUSS DESIGNATION (2)	TOP CHORD TWO ANGLES MK	TYPE STEEL	CHORD SIZE	LENGTH	BOTTOM CHORD TWO ANGLES MK	TYPE STEEL	CHORD SIZE	LENGTH	MAIN WEB MK	TYPE STEEL	DIA	LENGTH	NO. OF K	FILLER NO.	DIA.
C32T21-L-5810	6	A242	2"x1½"x.25"	58'-10"	7	A242	2"x1½"x.25"	51'-2½"	3	A242	.92	87'-2½"	14 K @ 3'-4" = 46'-8"	12	.92
									3B	A242	.92	10'-7⅝"	3.4K @ [illegible] = 5'-9"		

COLUMN END

Es END TRUSS DESIGNATION (2)	BEARING ANGLES MK	TYPE STEEL	CHORD SIZE	LENGTH	WE	DOUBLE STRUT MK	TYPE STEEL	DIA	LENGTH	CHORD PLATE MK	TYPE STEEL	SIZE	LENGTH	END STIFFENER MK. V8 TYPE STEEL	DIA.	LENGTH	MK. V9 TYPE STEEL	DIA.	LENGTH
C32T21-L-5810	9 / 9A	A242 / A242	[illegible]	[illegible]	4'-4⅛"	[illegible]	A242	.92	2'-5¾"	13	A36	3"x.25"	4'-4"	A242	.92	[illegible]	A242	.92	[illegible]

CORE END

EL END TRUSS DESIGNATION (2)	BEARING ANGLES MK	TYPE STEEL	CHORD SIZE	LENGTH	WEv	DIAGONAL ST STRUT MK	TYPE STEEL	DIA.	LENGTH	VERTICAL STv STRUT MK.	TYPE STEEL	DIA.	LENGTH	STIFFENER (4 REQ'D) MK. V1 TYPE STEEL	DIA.	LENGTH	MK. V2 TYPE STEEL	DIA.	LENGTH	MK. V4 TYPE STEEL	DIA	LENGTH
C32T21-L-5810	9v	A242	2"x1½"x.31	3'-2"	2'-6¼"	8	A242	.92	2'-5¾"	—	—	—	—	A242	.92	4'-3⅛"	—	—	—	—	—	—

CHECK DIMENSION FOR TRUSS FAB. LOCATION OF TRANS. TRUSS

CL-1	CL-2	CL-3	CL-4	Fs
[illegible]	32'-1½"	[illegible]	49'-6½"	7'-4½"

CONNECTION ANGLE NO	MK	TYPE STEEL	ANGLE SIZE	LENGTH
2	CA-3 (3)	A242	2"x1½"x.31	4'-4"

FLOOR TRUSS C32T21-L (2)

WORLD TRADE CENTER TOWER A & B

FABRICATION BY LACLEDE STEEL COMPANY
FABRICATED AT MADISON, ILLINOIS
DESIGN DRAWING NO. 7-AB1-20
PLATE
APPROVED FOR FABRICATION FOR P.O.N.Y.A. James White 12/9/68
DRAWN BY [illegible] DATE OCT. 5, 1968
APPROVED FOR FABRICATION BY FOR FABRICATOR
CHECKED BY T.M. CHURA DATE OCT. 10, 1968
IN CHARGE OF PROD. DEV.
DETAILED BY [illegible]
FABRICATION CONT. NO. WTC 221
SHEET ST 221

[redacted]

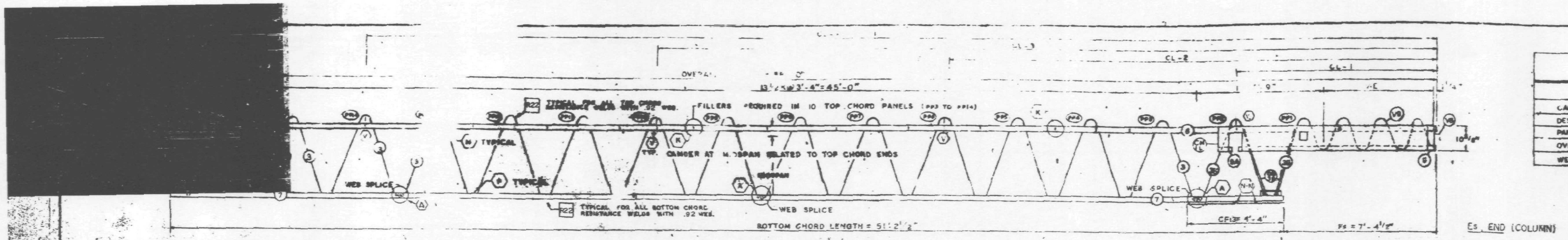

EL END (CORE)

TRUSS ELEVATION

Es END (COLUMN)

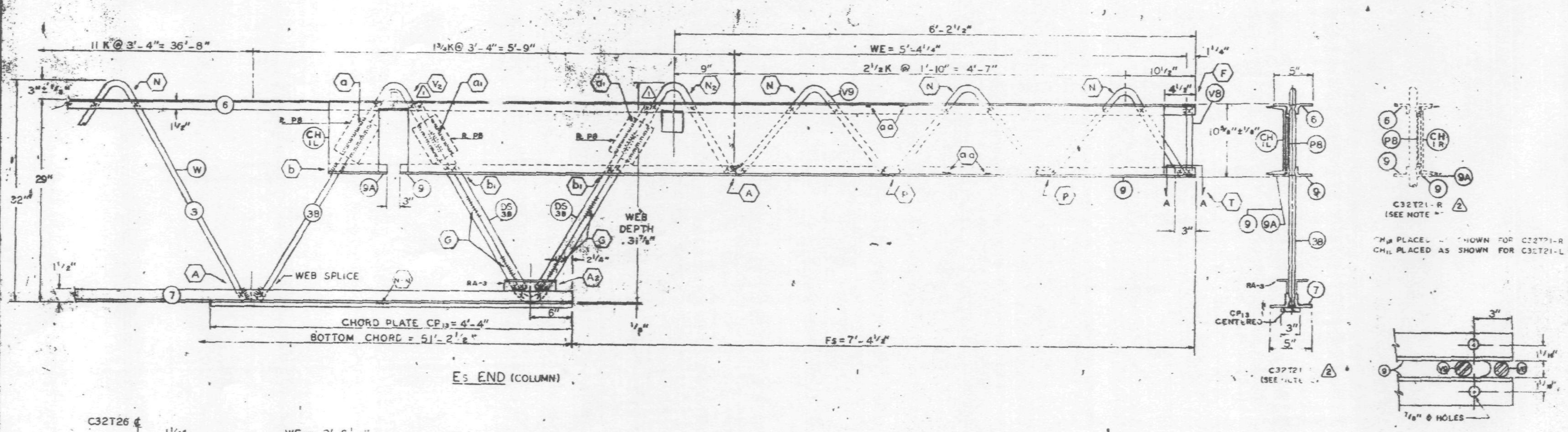

Es END (COLUMN)

SECTION A-A

ALL PANEL POINTS RESISTANCE WELDED. (x).
ARC WELDS INDICATED AT SHADED AREAS
AND AT BOTTOM CHORD WEB SPLICES.
LETTERS IN HEXAGON INDICATE WELD DETAIL, ie. (A).
LETTERS AND NUMBERS IN SQUARES INDICATE
RESISTANCE WELD STRENGTH IDENTIFIED IN THE
QUALITY CONTROL PROGRAM. ie., [R9].
ALL WELD DETAILS SHOWN ON SHEETS ST290, ST291,
ST 292 AND ST293.
ALL CHANNEL DETAILS SHOWN ON SHEET ST 407.
CHORD PLATE DETAILS SHOWN ON SHEET ST 283.
SEE SHEET ST 295 FOR VI DETAIL.

NOTE 2

ALL DETAILS & ELEVATIONS SHOWN FOR C32T21-L (2)
TRUSSES ARE APPLICABLE TO C32T21-R TRUSSES
WITH CHANNEL CHIR AND BEARING ANGLE 9A
PLACED ON OPP. HAND AS SHOWN.

FABRICATION REQUIREMENTS	DESIGN	TOLERANCE
CAMBER AT MIDSPAN	1 3/8"	± 3/8"
DESIGN DEPTH	29"	± 1/8"
PANEL K	3'-4"	1/8"
OVERALL LENGTH	58'-10"	± 3/8"
WEB DEPTH	8"	± 1/4"

C32T26 ℄

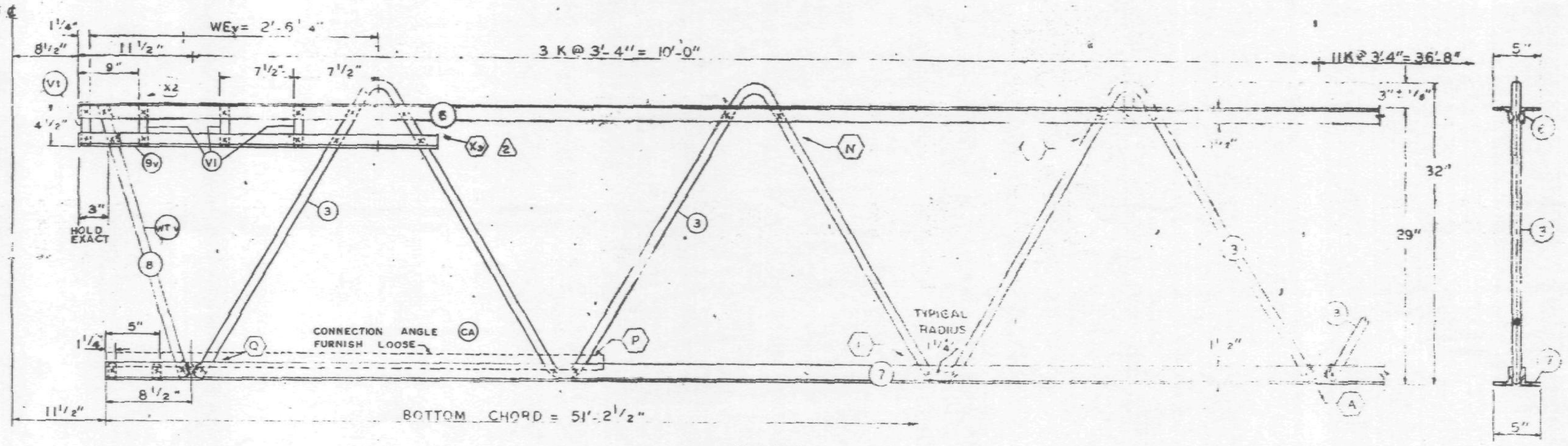

EL END (CORE)

NO	DATE	REVISION	BY
2	11-7-68	AS NOTED	G.D.C.
1	10-31-68	AS NOTED	L.W.H.

(2) REF. DRWG.

7-AB1-20	10-4-68
7-AB1-54	10-4-68
7-AB1-53	7-22-68
[illegible]-2	1-3-68
[illegible] AB3-24	8-15-68
7-AB4-17 & 17.2	10-4-68
SA-124	10-11-68
7-AB4-1L2	7-22-68

PAINT

[illegible] ELECTROCOAT

TRUSS DESIGNATION (2)	TOP CHORD TWO ANGLES MK	TYPE STEEL	CHORD SIZE	LENGTH	BOTTOM CHORD TWO ANGLES MK	TYPE STEEL	CHORD SIZE	LENGTH	MAIN WEB "W" MK	TYPE STEEL	DIA.	LENGTH	NO. OF K	FILLER NO.	DIA.	"M" C/C HOLES	CHORD PLATE MK	TYPE STEEL	SIZE	LENGTH	[illegible]	[illegible]	CHANNEL PLATES MK	TYPE STEEL	PCS	SIZE	LENGTH	REINFORCING ANGLES (2 REQ'D) MK	TYPE STEEL	SIZE	LENGTH	TRUSS DATA
C32T21-L-5810	6	A242	2"x1½"x.25"	58'-10"	7	A242	2"x1½"x.25"	51'-2½"	3	A242	.92	87'-2½"	14 K @ 3'-4" = 46'-8"	12	.92"	—	—	—	—	—	4	.92	[illegible]	A36	[illegible]	4"x39	5'-2"	RA3	A242	2"x1½"x.25	7'-2"	
									3B	A242	.92	10'-7⅝"	1¾ K @ 3'-4" = 5'-9"																			

COLUMN END

Es END	TRUSS DESIGNATION (2)	BEARING ANGLES MK	TYPE STEEL	CHORD SIZE	PCS	LENGTH	WE	DOUBLE STRUT MK	TYPE STEEL	DIA	LENGTH (2 REQ'D)	CHORD PLATE MK	TYPE STEEL	SIZE	LENGTH	END STIFFENER MK. V8 TYPE STEEL	DIA.	LENGTH	MK. V9 TYPE STEEL	DIA.	LENGTH	MK. V10 TYPE STEEL	DIA.	LENGTH	CHANNEL MK	TYPE STEEL	CHANNEL SIZE	LENGTH
	C32T21-L-5810	9	A242	2"x1½"x.25"	1	9'-6"	5'-4¼"	DS 38	A242	.92	2'-6¾"	CP 13	A36	3"x.25"	4'-4"	A242	.92	10½"	A242	.92	8'-3⅞"	—	—	—	CHIL	A36	10[30	10'-0"
		9A	A242	2"x1½"x.25"	1	8½"																			CHIR	A36	10[30	10'-0"

CHECK DIMENSION FOR TRUSS FAB.

LOCATION OF TRANS. TRUSS				
CL-1	CL-2	CL-3	CL-4	Fs
9'-6½"	22'-10½"	36'-2½"	49'-6½"	7'-4½"

CORE END

EL END	TRUSS DESIGNATION (2)	BEARING ANGLES MK	TYPE STEEL	CHORD SIZE	LENGTH	WEy	DIAGONAL "Tv" STRUT MK	TYPE STEEL	DIA.	LENGTH	VERTICAL "STv" STRUT MK.	TYPE STEEL	DIA.	LENGTH	END STIFFENER (4 REQ'D) MK. V1 TYPE STEEL	DIA.	LENGTH	V2 TYPE STEEL	DIA.	LENGTH	MK. V4 TYPE STEEL	DIA.	LENGTH	DOUBLE STRUT MK	TYPE STEEL	DIA.	LENGTH	DOUBLE STRUT MK.	TYPE STEEL	DIA.	LENGTH	CONNECTION ANGLE NO	MK	TYPE STEEL	ANGLE SIZE	LENGTH
	C32T21-L-5810	8	A242	2"x1½"x.31	3'-2"	2'-6¼"	8	A242	.92	2'-5¾"	—	—	—	—	A242	.92	4⅝"	—	—	—	—	—	—	—	—	—	—	—	—	—	—	2	CA	A242	2"x1½"x.31	4'-4"

FLOOR TRUSS DETAILS

FOR

WORLD TRADE CENTER N.Y.C.

FOR

THE PORT OF NEW YORK AUTHORITY

FLOOR TRUSS C32T21-L (2) SEE NOTE [illegible] x 58'-10"

WORLD TRADE CENTER TOWERS A & B

FABRICATION BY LACLEDE STEEL COMPANY

FABRICATED AT MADISON, ILLINOIS		DESIGN DRAWING NO 7-AB1-20	PLATE
APPROVED FOR FABRICATION FOR P.O.N.Y.A. BY	DATE 11/18/68	DRAWN BY [illegible] DATE OCT. 3, 1968	
APPROVED FOR FABRICATION FOR FABRICATOR BY	DATE	CHECKED BY T.M.CHURA DATE OCT 10, 1968	IN CHARGE OF PROD. DEV.
DETAILED BY A. CARL WEBER		FABRICATION CONT NO W.T.C. 221	SHEET NO. ST 221 L

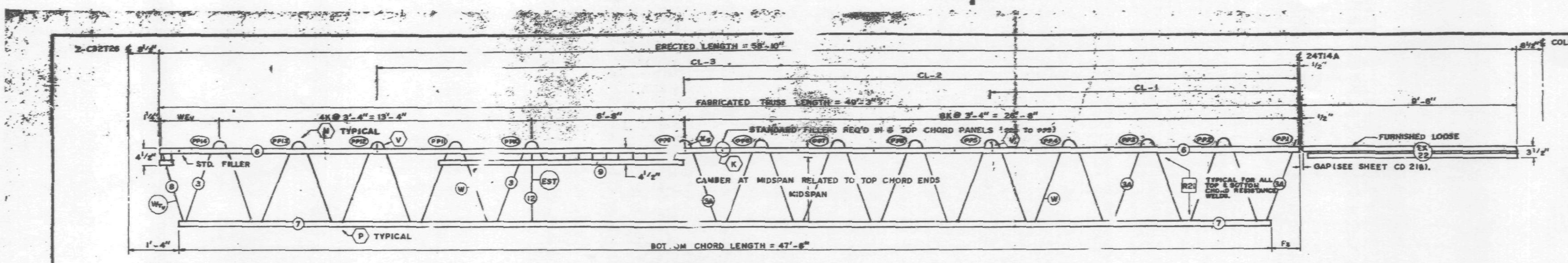

EL END (CORE) — TRUSS ELEVATION — ES END (COLUMN)

FABRICATION REQUIREMENTS

	DESIGN	TOLERANCE
CAMBER AT MIDSPAN	13/16"	± 3 8"
DESIGN DEPTH	29"	± 1/4"
PANEL "K"	3'-	± 1/4"
WEB DEPTH	31 "	± 1/4"
OVERALL TRUSS LENGTH	49'-3"	± 3/8
*OVERALL EXT. END LENGTH	9'-6"	4"

*EXT. END MK. EX22 TO BE FURNISHED LC SE.

ALL PANEL POINTS RESISTANCE WELDED. (X).
ARC WELDS INDICATED AT SHADED AREAS AND AT BOTTOM CHORD WEB SPLICES. (IIIIII).
ALL WELD DETAILS SHOWN ON SHEET ST 290, ST 291, ST 292 & ST 293.
LETTERS IN HEXAGON INDICATE WELD DETAIL. ie., (P).
LETTERS AND NUMBERS IN SQUARES INDICATE RESISTANCE WELD STRENGTH IDENTIFIED IN THE QUALITY CONTROL ROGRAM. ie., R21.

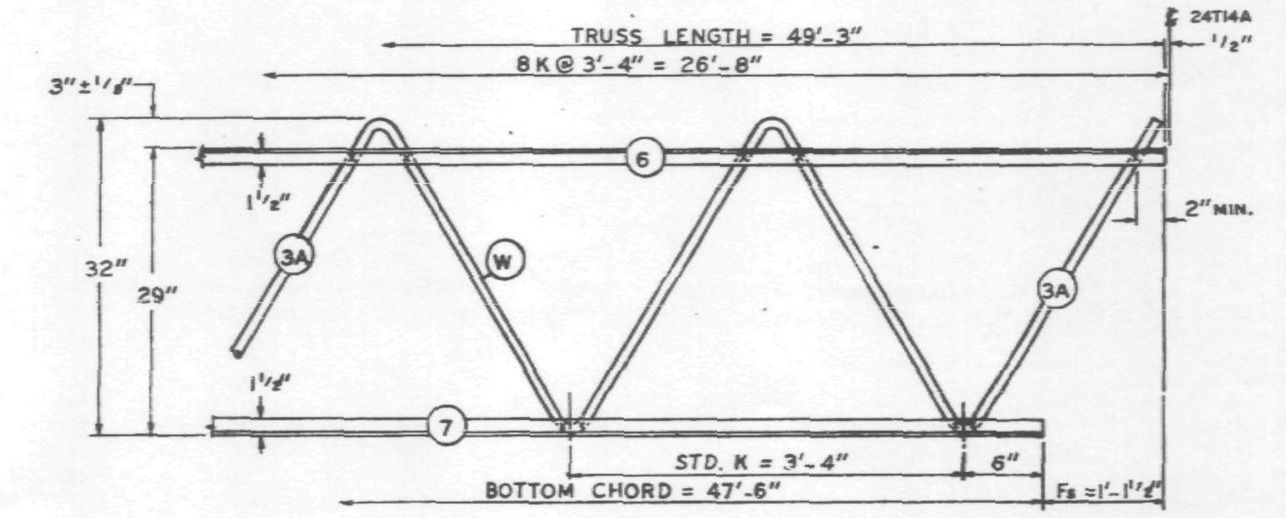

ES END (COLUMN)

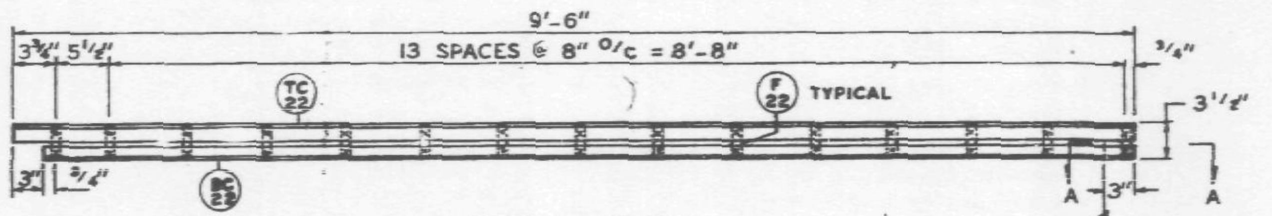

EX22 ELEVATION

EX22 TO BE FURNISHED LOOSE

LIST OF MATERIALS FOR EX22						
MK.	PCS.	TYPE STEEL	DIA.	ANGLE SIZE	LENGTH	TOLERANCE
TC22	2	A242	—	2"x1 1/2"x.25"	9'-6"	+1/4" -0"
BC22	2	A242	—	2"x1 1/2"x.25"	9'-3"	+1/4" -0"
F22	15	A242	.98	—	3 3/8"	± 1/8"

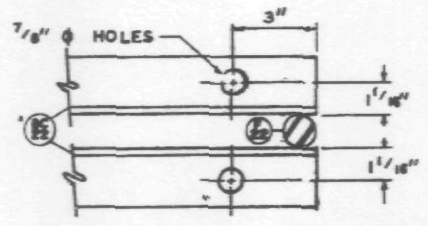

SECTION A-A

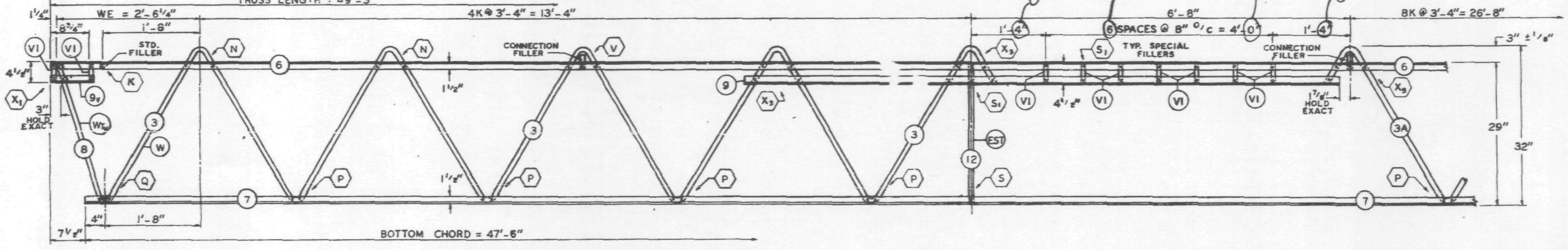

EL END (CORE)

REF. DRWG.

7-AB1-21	10-4-68
7-AB4-10	10-4-68
7-AB1-54	10-4-68
7-AB1-1	4-1-68
7-AB3-34 & 35	10-4-68
7-AB4-57 & 59	10-4-68
SA-124	10-11-68

PAINT
LACLEDE ELECTROCOAT
RED NO. 10001

TRUSS DESIGNATION	TOP CHORD TWO ANGLES				BOTTOM CHORD TWO ANGLES				MAIN WEB "W"				
	MK.	TYPE STEEL	CHORD SIZE	LENGTH	MK.	TYPE STEEL	CHORD SIZE	LENGTH	MK.	TYPE STEEL	DIA.	LENGTH	NO. OF K
C32T22-493	6	A242	2"x1 1/2"x.25"	49'-3"	7	A242	2"x1 1/2"x.25"	47'-6"	3 / 3A	A242 / A242	.98 / .98	[illegible]	4 1/2K @ 3'-4" = 15'-0" / 8K @ 3'-4" = 26'-8"

TRUSS DESIGNATION	STD. FILLER		"M" C/C HOLE	BEARING ANGLES				VERTICAL "EST" STRUT					SPECIAL FILLER MK. VI			CONNECTION FILLER		
	NO.	DIA.		MK	TYPE STEEL	CHORD SIZE	LENGTH	MK	TYPE STEEL	PCS.	DIA.	LENGTH	TYPE STEEL	DIA.	LENGTH (7 REQ'D)	TYPE STEEL	DIA.	LENGTH (3 REQ'D)
C32T22-493	7	.98	—	9	A242	2"x1 1/2"x.25"	10'-5 1/8"	12	A242	1	.98	2'-4 7/8"	A242	.98	4 3/8"	A242	.98	3"

COLUMN END

ES END	TRUSS DESIGNATION
	C32T22-493

CORE END

EL END	TRUSS DESIGNATION	BEARING ANGLES				WEV	END STIFFENER MK. VI			WEB "WTV"				
		MK.	TYPE STEEL	CHORD SIZE	LENGTH		TYPE STEEL	DIA.	LENGTH (2 REQ'D)	MK.	TYPE STEEL	PCS.	DIA.	LENGTH
	C32T22-493	9v	A242	2"x1 1/2"x.25"	10"	2'-6 1/4"	A242	.98	4 3/8"	8	A242	1	.98	2'-5 3/4"

CHECK DIMENSION FOR TRUSS FAB.

LOCATION OF TRANS. TRUSS			
CL-1	CL-2	CL-3	FS
13'-3 1/2"	26'-7 1/2"	39'-11 1/2"	1'-1 1/2"

SKILLING-HELLE CHRISTIANSEN-ROBERTSON
Structural & Civil Engineers
DATE 12/6/68 SK

NO.	DATE	REVISION	BY

STEEL TRUSS DETAILS
FOR
WORLD TRADE CENTER - N.Y.C.
FOR
THE PORT OF NEW YORK AUTHORITY

FLOOR TRUSS C32T22 x 49'-3" LONG
WORLD TRADE CENTER TOWERS A & B

FABRICATION BY LACLEDE STEEL COMPANY
FABRICATED AT MADISON, ILLINOIS
DESIGN DRAWING NO. 7-AB1-21
PLATE
APPROVED FOR FABRICATION BY: FOR P.O.N.Y.A. DATE
DRAWN BY: g.d.c. DATE NOV. 13, 1968
APPROVED FOR FABRICATION BY: FOR FABRICATOR DATE
CHECKED BY: T.M. CHURA DATE NOV. 13, 1968
IN CHARGE OF PROD. DEV.
LACLEDE STEEL CO.
DETAILED BY: A. CARL WEBER
FABRICATION CONT. NO. W.T.C. 221
SHEET NO. ST 222

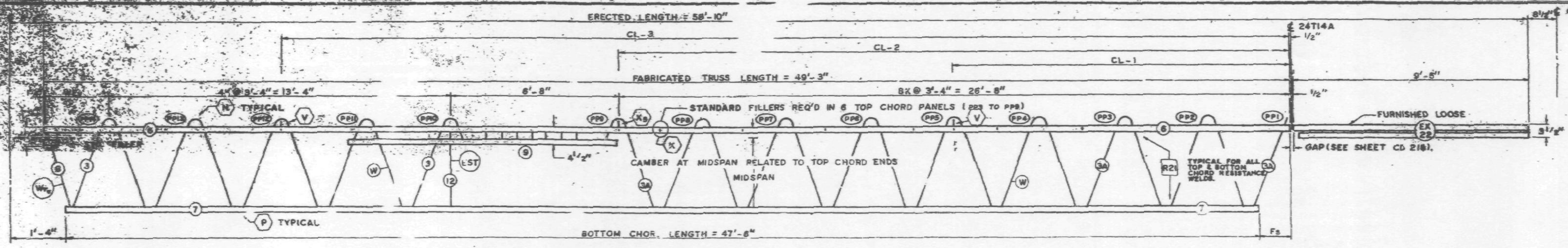

EL END (CORE) — TRUSS ELEVATION — Es END (COLUMN)

FABRICATION REQUIREMENTS

	DESIGN	TOLERANCE
CAMBER AT MIDSPAN	13/16"	± 3/8"
DESIGN DEPTH	29"	± 1/4"
PANEL "K"	3'-4"	± 1/4"
WEB DEPTH	31 7/8"	± 1/4"
OVERALL TRUSS LENGTH	49'-3"	± 3/8"
*OVERALL EXT. END LENGTH	9'	± 1/4"

*EXT. END MK. EX22 TO BE FURNISHED LOOSE.

ALL PANEL POINTS RESISTANCE WELDED. (X).
ARC WELDS INDICATED . SHADED AREAS AND AT BOTTOM CHORD WEB SPLICES. (IIIIIII).
ALL WELD DETAILS SHOWN ON SHEET ST 290, ST 291, ST 292 & ST 293.
LETTERS IN HEXAGON INDICATE WELD DETAIL. ie., (P).
LETTERS AND NUMBERS IN SQUARES INDICATE RESISTANCE WELD STRENGTH IDENTIFIED IN THE QUALITY CONTROL PROGRAM. ie., [R21].

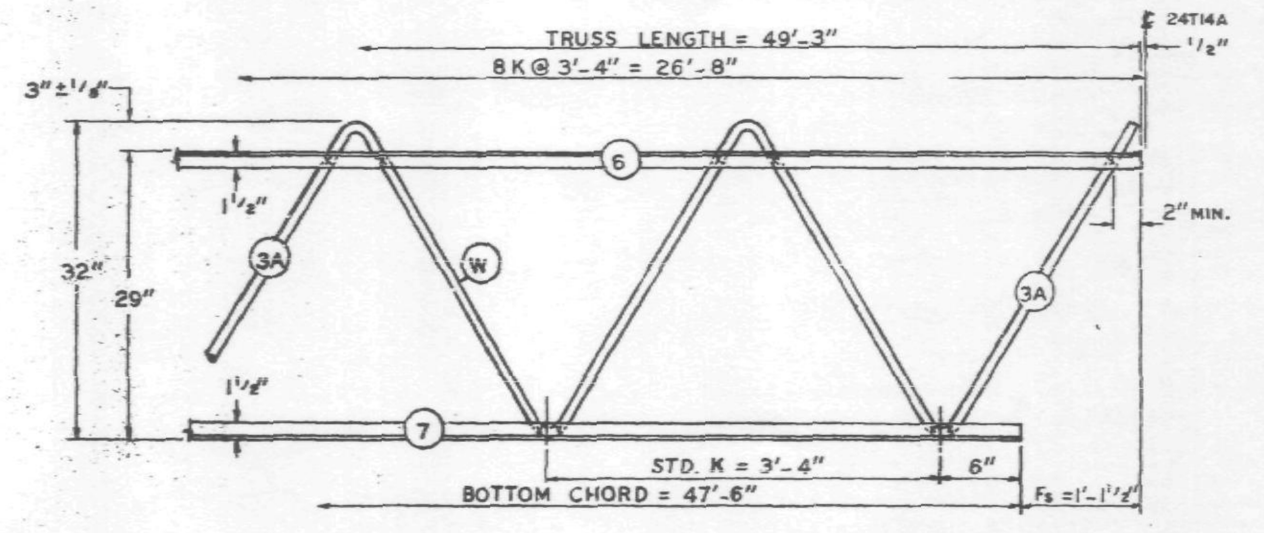

Es END (COLUMN)

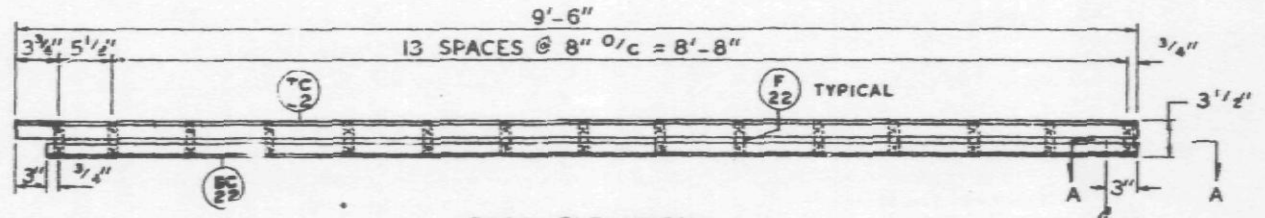

EX22 ELEVATION

EX22 TO BE FURNISHED LOOSE

LIST OF MATERIALS FOR EX22						
MK.	PCS.	TYPE STEEL	DIA.	ANGLE SIZE	LENGTH	TOLERANCE
TC22	2	A242	—	2"x1 1/2"x.25"	9'-6"	+1/4" -0"
BC22	2	A242	—	2"x1 1/2"x.25"	9'-3"	+1/4" -0"
F22	15	A242	.98	—	3 3/8"	± 1/8"

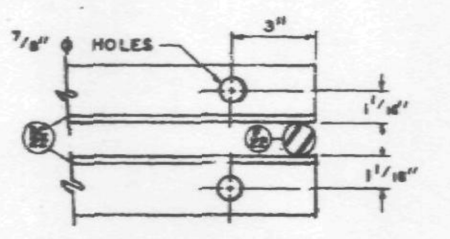

SECTION A-A

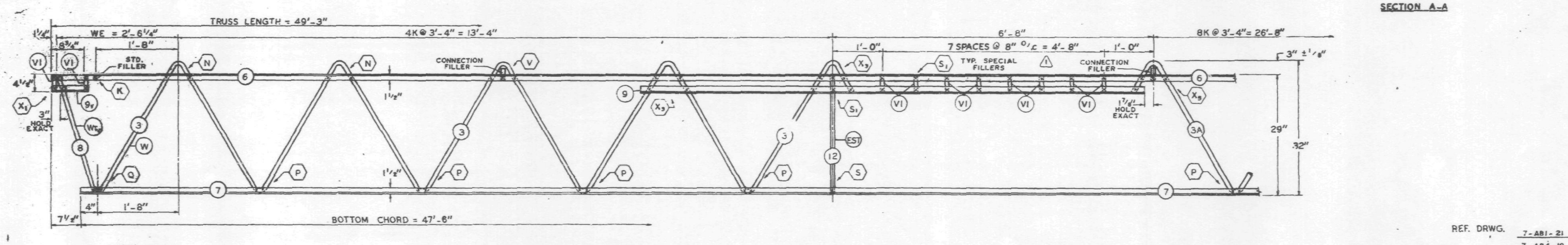

EL END (CORE)

REF. DRWG.

7-AB1-21	10-4-68
7-AB4-10	10-4-68
7-AB1-54	11-25-68
7-AB1-1	4-1-68
7-AB3-34 & 35	10-4-68
7-AB4-57 & 59	10-4-68
SA-124	10-11-68

PAINT
LACLEDE ELECTROCOAT
RED NO. 10001

TRUSS DESIGNATION	TOP CHORD TWO ANGLES				BOTTOM CHORD TWO ANGLES				MAIN WEB "W"					STD. FILLER		"M" C/C HOLE	BEARING ANGLES					VERTICAL "EST" STRUT					SPECIAL FILLER ⚠1 MK. VI			CONNECTION FILLER		
	MK.	TYPE STEEL	CHORD SIZE	LENGTH	MK.	TYPE STEEL	CHORD SIZE	LENGTH	MK.	TYPE STEEL	DIA.	LENGTH	NO. OF K	NO.	DIA.		MK.	TYPE STEEL	CHORD SIZE	LENGTH	MK.	TYPE STEEL	PCS.	DIA.	LENGTH	TYPE STEEL	DIA.	LENGTH (8 REQ'D)	TYPE STEEL	DIA.	LENGTH (3 REQ'D)
C32T22-493	6	A242	2"x1 1/2"x.25"	49'-3"	7	A242	2"x1 1/2"x.25"	47'-6"	3 3A	A242 A242	.98 .98	28'-8 3/4" 50'-6 3/8"	4 1/2K @ 3'-4" = 15'-0" 8K @ 3'-4" = 26'-8"	7	.98	—	9	A242	2"x1 1/2"x.25"	10'-5 1/8"	12	A242	1	.98	2'-4 7/8"	A242	.98	4 3/8"	A242	.98	3"

COLUMN END

Es END	TRUSS DESIGNATION
	C32T22-493

CORE END

EL END	TRUSS DESIGNATION	BEARING ANGLES				WEv	END STIFFENER MK. VI			WEB "WTv"				
		MK.	TYPE STEEL	CHORD SIZE	LENGTH		TYPE STEEL	DIA.	LENGTH (2 REQ'D)	MK.	TYPE STEEL	PCS.	DIA.	LENGTH
	C32T22-493	9v	A242	2"x1 1/2"x.25"	10"	2'-6 1/4"	A242	.98	4 3/8"	8	A242	1	.98	2'-5 3/4"

CHECK DIMENSION FOR TRUSS FAB.

LOCATION OF TRANS. TRUSS			
CL-1	CL-2	CL-3	Fs
13'-3 1/2"	26'-7 1/2"	39'-11 1/2"	1'-1 1/2"

NO.	DATE	REVISION	BY
⚠1	12-9-68	SPECIAL FILLER, REF DRWG.	G.D.C.

STEEL TRUSS DETAILS
FOR
WORLD TRADE CENTER - N.Y.C.
FOR
THE PORT OF NEW YORK AUTHORITY

FLOOR TRUSS C32T22 x 49'-3" LONG
WORLD TRADE CENTER TOWERS A & B

FABRICATION BY: LACLEDE STEEL COMPANY

FABRICATED AT MADISON, ILLINOIS		DESIGN DRAWING NO. 7-AB1-21	PLATE
APPROVED FOR FABRICATION BY: James White FOR P.O.N.Y.A.	DATE 12/12/68	DRAWN BY: g.d.c. DATE NOV. 13, 1968	
APPROVED FOR FABRICATION BY: FOR FABRICATOR	DATE	CHECKED BY: T.M.CHURA DATE NOV. 13, 1968	IN CHARGE OF PROD. DEV.
LACLEDE STEEL CO. DETAILED BY: A. CARL WEBER		FABRICATION CONT. NO W.T.C. 221	SHEET NO. ST 222

CHORD PLATE DETAILS SHOWN ON SHEET ST283. LETTERS IN HEXAGON INDICATE WELD DETAIL, i.e. (A) LETTERS & NUMBERS IN SQUARES INDICATE RESISTANCE WELD STRENGTH IDENTIFIED IN THE [illegible]

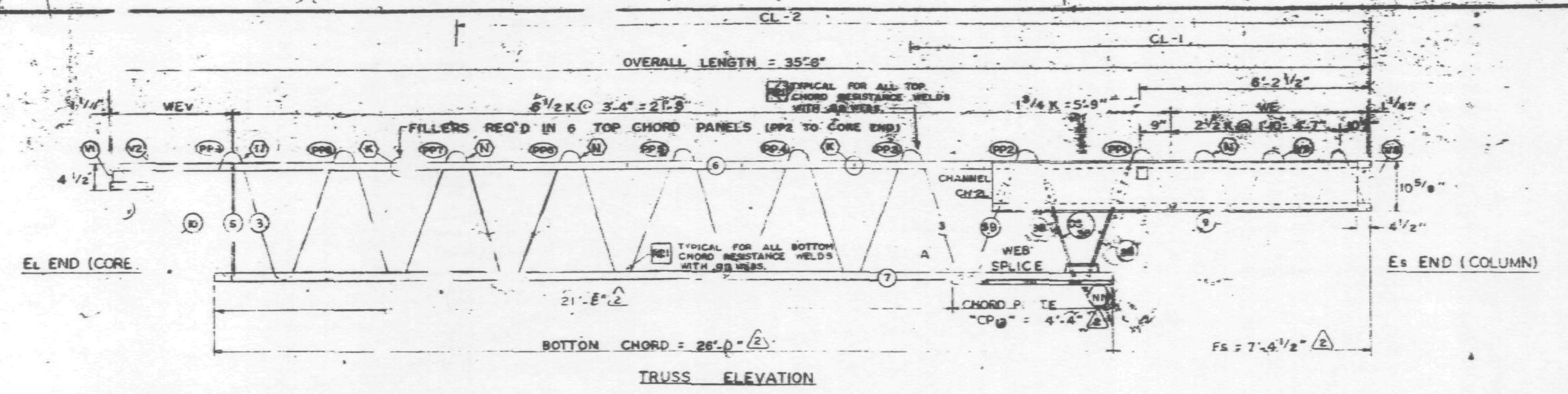

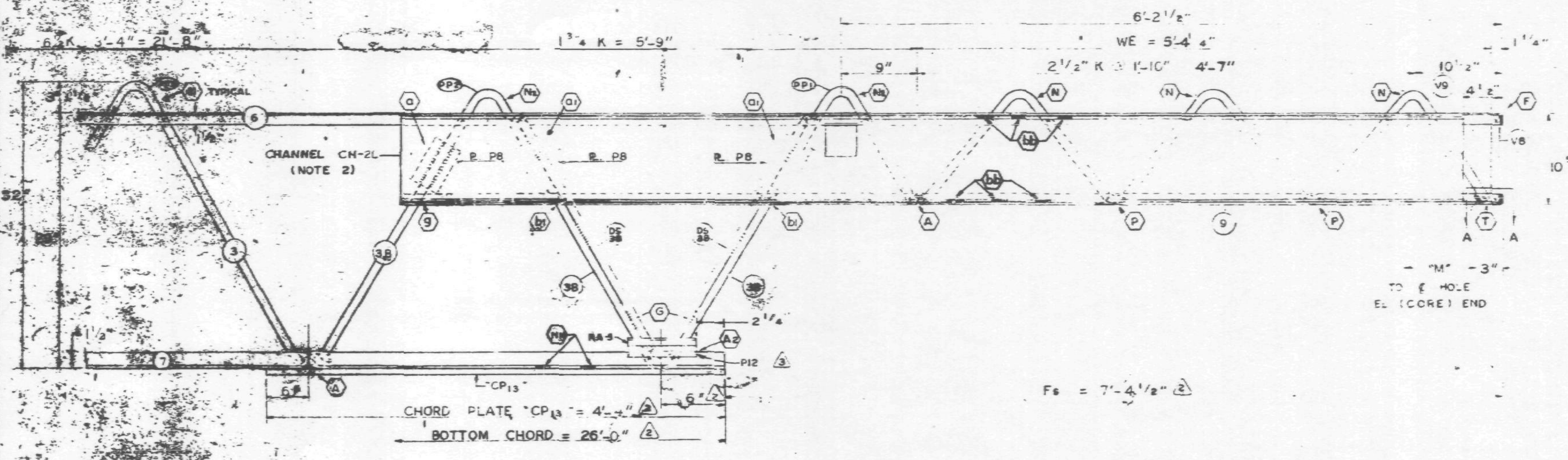

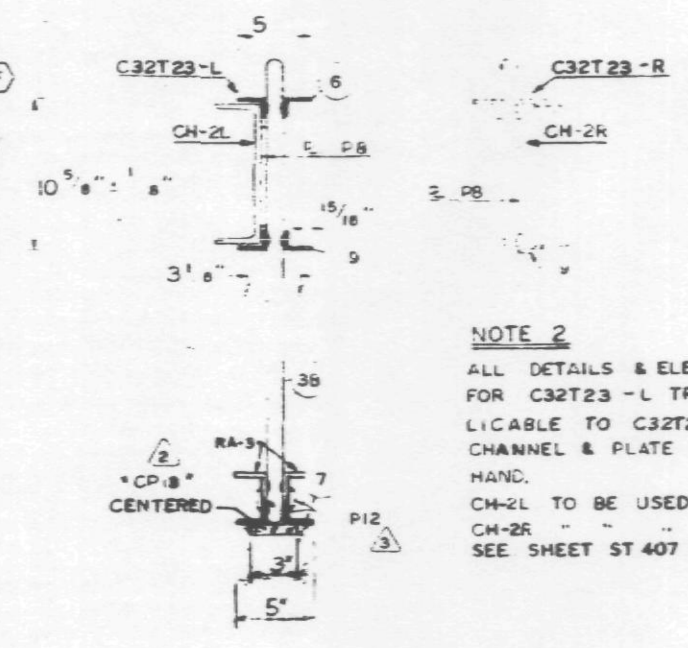

NOTE 2

ALL DETAILS & ELEVATIONS SHOWN FOR C32T23 -L TRUSSES ARE APPLICABLE TO C32T23 -R TRUSSES WITH CHANNEL & PLATE PLACED ON OPP. HAND.
CH-2L TO BE USED WITH C32T23 -L
CH-2R " " " " C32T23 -R
SEE SHEET ST 407 FOR CHANNEL DETAILS.

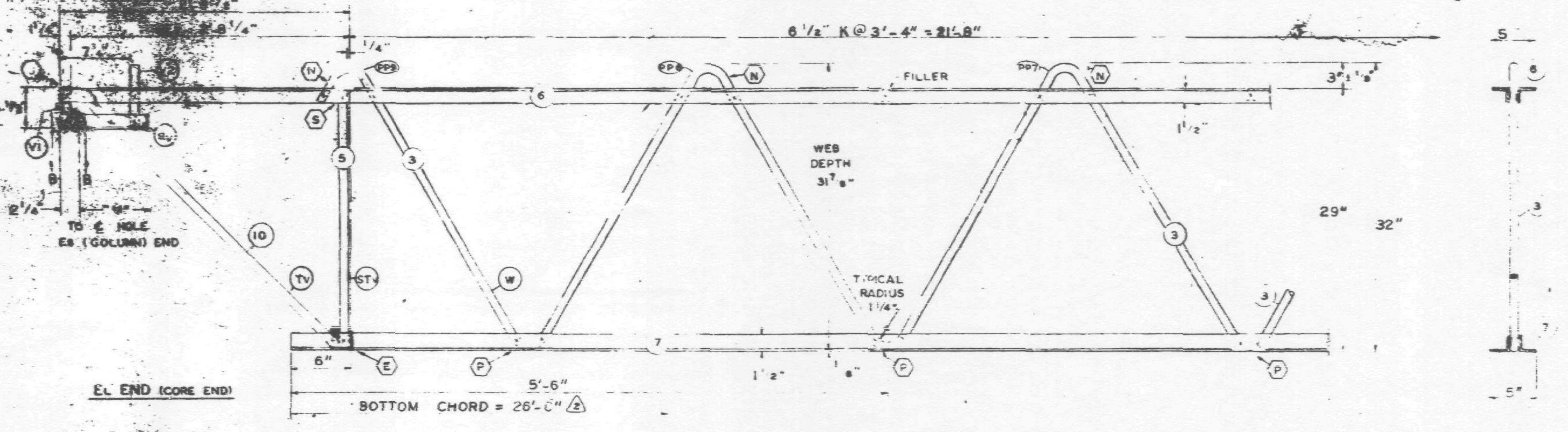

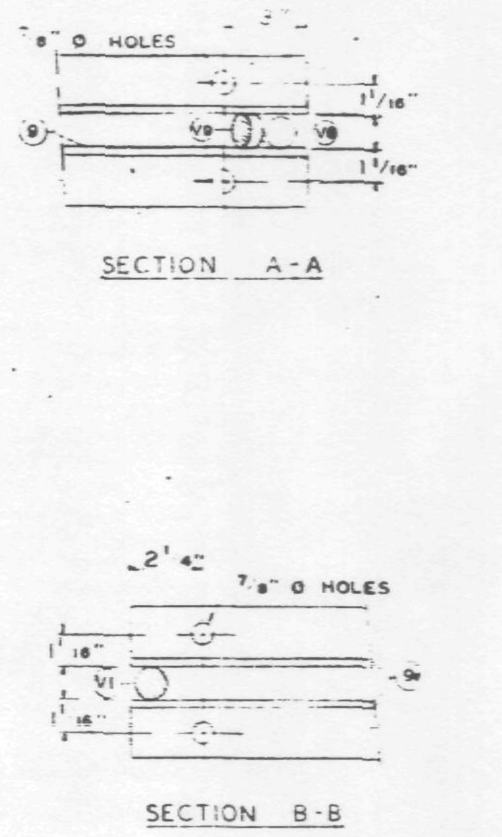

FABRICATION [illegible]			
CAMBER AT MIDSPAN			
DESIGN DEPTH			
PANEL "K"		4"	±1/
OVERALL LENGTH		35'-8"	±3/8"
WEB DEPTH		31 7/8"	±1/4"
CL DIMENSIONS		—	±3/8"

NO.	DATE	REVISION	BY
3	12-26-68	AS NOTED	G.W.C.
2	10-16-68	AS NOTED	E.Z.M.
1	10-4-68	GENERAL	T.K.C.

(3) REF. DRWG.

7-ABI-22	10-4-68
7-ABI-52	2-15-68
7-ABI-53	7-22-68
7-ABI-54	11-13-68
7-AB4-53-56	10-4-68
SA-124	10-11-68

PAINT: LACLEDE ELECTROCOAT RED NO. 10001

TRUSS DESIGNATION	TOP CHORD TWO ANGLES				BOTTOM CHORD TWO ANGLES				MAIN WEB "W"					FILLER		"M" C/C HOLE	CONNECTION FILLERS			CHORD PLATE				CHANNEL PLATES					REINF. ANGLE (2 REQ'D)				SPEC. PLATES (2 REQ'D)			
	MK.	TYPE STEEL	CHORD SIZE	LENGTH	MK.	TYPE STEEL	CHORD SIZE	LENGTH (2)	MK.	TYPE STEEL	DIA.	LENGTH	NO. OF "K" SEE NOTE 1	NO.	DIA.		NO.	DIA.	LENGTH	MK.	TYPE STEEL	SIZE	LENGTH	MK.	TYPE STEEL	PCS.	SIZE	LENGTH	MK.	TYPE STEEL	SIZE	LGTH.	MK.	TYPE STEEL	SIZE	LGTH.
C32T23-L	6	A242	2"x 1 1/2" x .25	35'-8"	7	A242	2"x 1 1/2" x .25	26'-0"	3 3B	A242 A242	.98 .98	40'-11 1/4" 10'-7 5/8"	6 1/2 K @ 3'-4" = 21'-8" 1 3/4 K = 5'-9"	6	.98	35'-2 3/4"	—	—	—					P8	A36	3	4"x.39	5 1/2"	RA3	A242	2"x1 1/2"x.25	7 1/2"	P12	A36	1"x3/8"	7 1/2"

COLUMN END

Es END	TRUSS DESIGNATION	BEARING ANGLES					WE	DOUBLE STRUT					END STIFFENER MK. V8			MK. V9			MK. V10		CHANNEL			NOTE NO. 2	CHORD PLATE (2)			
		MK.	TYPE STEEL	CHORD SIZE	PCS	LENGTH		MK.	TYPE STEEL	DIA.	LENGTH	PCS.	TYPE STEEL	DIA.	LENGTH	TYPE STEEL	DIA.	LENGTH	DIA.	LENGTH	MK.	TYPE STEEL	CHANNEL SIZE	LENGTH	MK.	TYPE STEEL	SIZE	LENGTH
	C32T23-L	9	A242	2"x1 1/2"x.25	2	10'-4 1/2"	5'-4 1/4"	DS 3B	A242	.98	2'-6 3/8"	2	A242	.98	10 1/2"	A242	.98	8'-3 7/8"	—	—	CH-2L CH-2R	A36 A36	10 ⊏ 30 10 ⊏ 30	10'-0 10'-0	CP13	A36	3"x.25	4'-4 1/2"

CHECK DIMENSION FOR FAB.

LOCATION OF TRANS. TRUSS				
CL-1	CL-2	CL-3	CL-4	Fs
12'-10 1/2"	26'-2 1/2"	—	—	7'-4 1/2" (2)

CORE END

EL END	TRUSS DESIGNATION	BEARING ANGLES				WEv	DIAGONAL "Tv" STRUT				VERTICAL "STv" STRUT				END STIFFENER MK. V1			MK. V2			MK. V4			DOUBLE STRUT					DOUBLE STRUT				
		MK.	TYPE STEEL	CHORD SIZE	LENGTH		MK.	TYPE STEEL	DIA.	LENGTH	MK.	TYPE STEEL	DIA.	LENGTH	TYPE STEEL	DIA.	LENGTH	TYPE STEEL	DIA.	LENGTH	TYPE STEEL	DIA.	LENGTH	MK.	TYPE STEEL	DIA.	LENGTH	MK.	TYPE STEEL	DIA.	LENGTH	PCS	
	C32T23-L	9V	A242	2"x1 1/2"x.25	10"	2'-8 1/4"	10	A242	.98	3'-6 1/4"	5	A242	.98	2'-4 7/8"	A242	.98	4 3/8"	A242	.98	7 3/8"	—	—	—	—	—	—	—	—	—	—	—	—	

STEEL TRUSS DETAILS
FOR
WORLD TRADE CENTER - N.Y.C.
FOR
THE PORT OF NEW YORK AUTHORITY

FLOOR TRUSS C32T23-L 35'-8" OVERALL (SEE NOTE NO. 2)
WORLD TRADE CENTER TOWERS A-B

FABRICATION BY: LACLEDE STEEL COMPANY

FABRICATED AT MADISON, ILLINOIS		DESIGN DRAWING NO. 7-ABI-22	PLATE
APPROVED FOR FABRICATION BY: James White FOR P.O.N.Y.A.	DATE 1/13/69	DRAWN BY: [illegible] DATE SEPT. 6, 1968	
APPROVED FOR FABRICATION BY: FOR FABRICATOR	DATE	CHECKED BY: T.M. CHURA DATE SEPT. 9, 1968	IN CHARGE OF PROD. DEV.
DETAILED BY: A. CARL WEBER		FABRICATION CONT. NO. W.T.C. 221	SHEET NO. ST 223-L

ALL PANEL POINTS RESISTANCE WELDED (X).
ARC WELDS INDICATED AT SHADED AREAS AND AT BOTTOM CHORD WEB SPLICES.
ALL WELD DETAILS SHOWN ON SHEETS ST290, 291, 292, 293 & ST283.
SEE SHEET ST295 FOR V1 & V2

CHORD PLATE DETAILS SHOWN ON SHEET ST283.
LETTERS IN HEXAGON INDICATE WELD DETAIL, ie (A)
LETTERS & NUMBERS IN SQUARES INDICATE RESISTANCE WELD STRENGTH IDENTIFIED IN THE QUALITY CONTROL PROGRAM, ie. [RS]

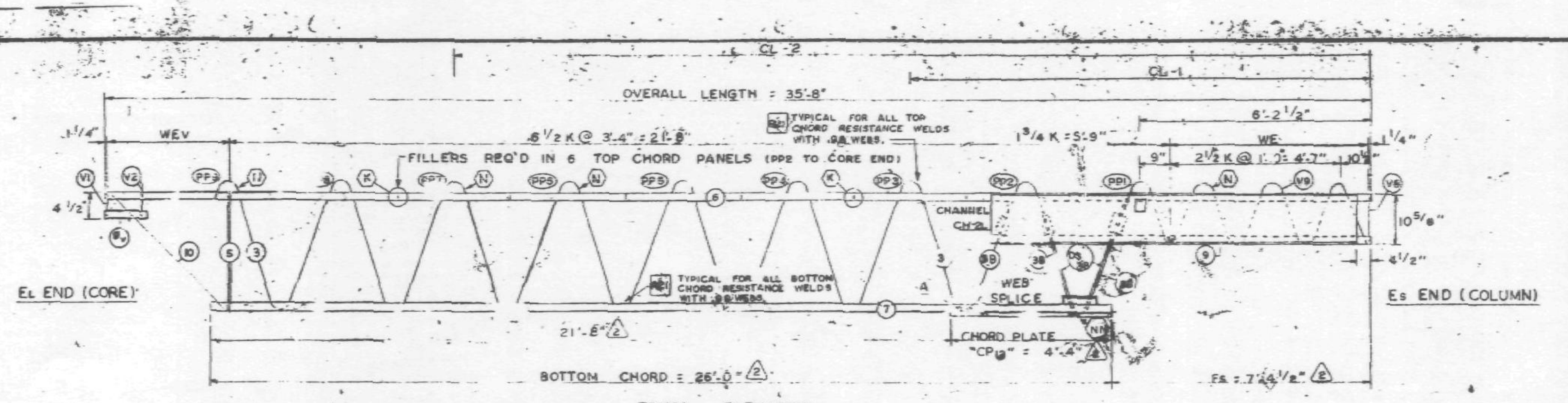

TRUSS ELEVATION

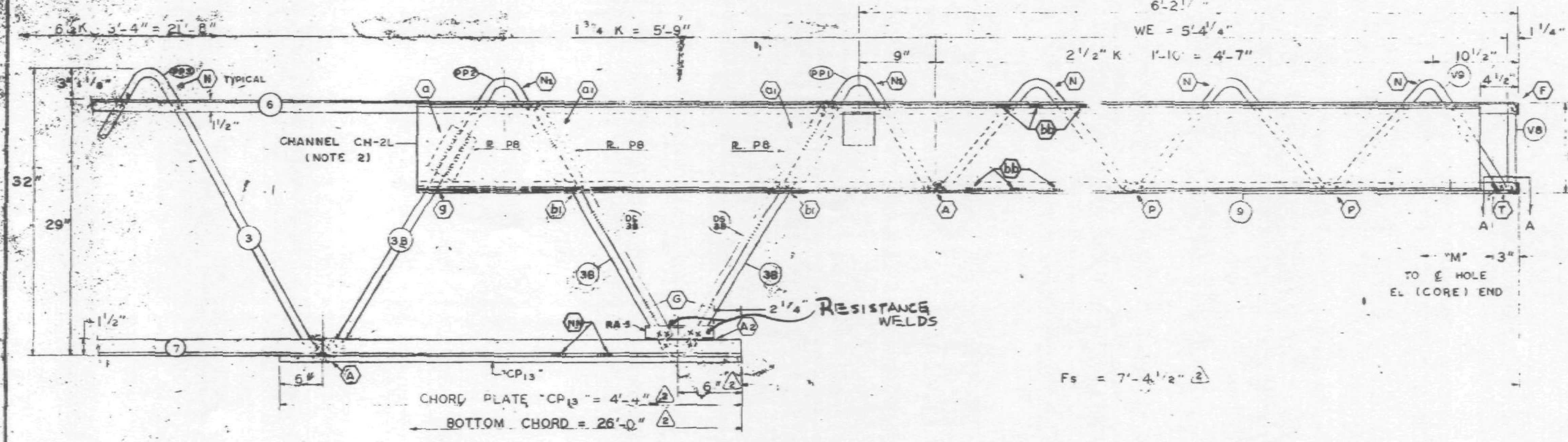

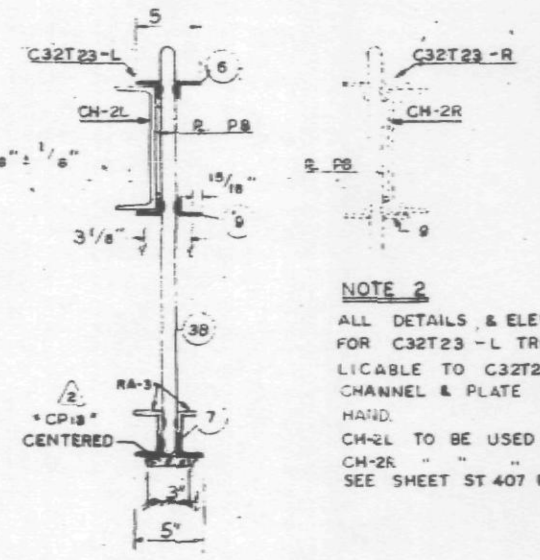

NOTE 2
ALL DETAILS & ELEVATIONS SHOWN FOR C32T23-L TRUSSES ARE APPLICABLE TO C32T23-R TRUSSES WITH CHANNEL & PLATE PLACED ON OPP. HAND.
CH-2L TO BE USED WITH C32T23-L
CH-2R " " " " C32T23-R
SEE SHEET ST 407 FOR CHANNEL DETAILS.

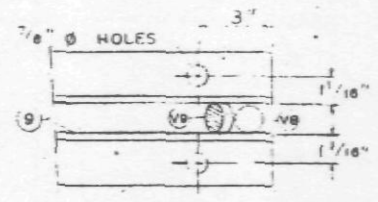

SECTION A-A

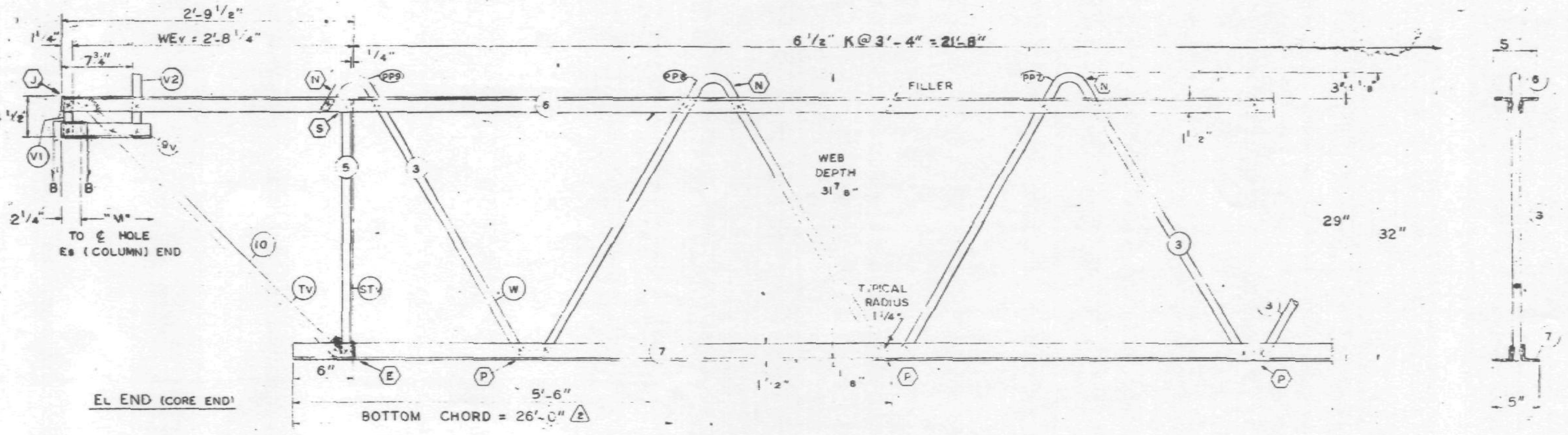

EL END (CORE END)

BOTTOM CHORD = 26'-0"

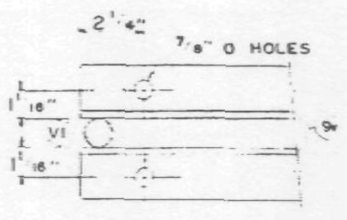

SECTION B-B

FABRICATION REQUIREMENTS

	DESIGN	TOLERANCE ±
CAMBER AT MIDSPAN	3/8"	3/8"
DESIGN DEPTH	29"	± 1/4"
PANEL "K"	3'-4"	± 1/4"
OVERALL LENGTH	35'-8"	± 3/8"
WEB DEPTH	31 7/8"	± 1/4
CL DIMENSIONS	—	± [illegible]

NO.	DATE	REVISION	BY
2	10-16-68	AS NOTED	E.W.H.
1	10-4-68	GENERAL	T.N.C.

REF. DRWG.

7-ABI-22	8-13-68
7-ABI-52	2-15-68
7-ABI-53	7-22-68
7-ABI-54	8-15-68
7-?64-53-56	8-15-68
SA-124	8-1-68

PAINT: LACLEDE ELECTROCOAT RED NO. 10001

TRUSS DESIGNATION	TOP CHORD TWO ANGLES MK.	TYPE STEEL	CHORD SIZE	LENGTH	BOTTOM CHORD TWO ANGLES MK.	TYPE STEEL	CHORD SIZE	LENGTH	MAIN WEB "W" MK.	TYPE STEEL	DIA.	LENGTH	NO. OF "K" SEE NOTE 1	FILLER NO.	DIA.	"M" C/C HOLE	CONNECTION FILLERS NO.	DIA.	LENGTH	CHORD PLATE MK.	TYPE STEEL	SIZE	LENGTH	CHANNEL PLATES MK.	TYPE STEEL	PCS.	SIZE	LENGTH	REINF. ANGLE (2 REQ'D) MK.	TYPE STEEL	SIZE	LGTH.	TRUSS DATA
C32T23-L	6	A242	2"x1 1/2"x.25	35'-8"	7	A242	2"x1 1/2"x.25	25'-0"	3 / 3B	A242 / A242	.98 / .98	40'-11 1/4" / 10'-7 5/8"	6 1/2 K @ 3'-4" = 21'-8" / 1 3/4 K = 5'-9"	6	.98	35'-2 3/4"	—	—	—					P8	A36	3	4"x2x3/8	5 1/2"	RA3	A242	2"x1 1/2"x.25	7 1/2"	

COLUMN END

Es END TRUSS DESIGNATION	BEARING ANGLES MK.	TYPE STEEL	CHORD SIZE	PCS	LENGTH	WE	DOUBLE STRUT MK.	TYPE STEEL	DIA.	LENGTH	PCS.	END STIFFENER MK. V8 TYPE STEEL	DIA	LENGTH	MK. V9 TYPE STEEL	DIA.	LENGTH	MK. V10 TYPE STEEL	DIA.	LENGTH	CHANNEL MK.	TYPE STEEL	CHANNEL SIZE	NOTE NO. 2 LENGTH	CHORD PLATE MK.	TYPE STEEL	SIZE	LENGTH
C32T23-L	9	A242	2"x1 1/2"x.25	2	10'-4 1/2"	5'-4 1/4"	DS 3B	A242	.98	2'-5 3/4"	2	A242	.98	10 1/2"	A242	.98	8'-3 7/8"	—	—	—	CH2L / CH2R	A36 / A36	10 ⊐ 30 / 10 ⊐ 30	10'-0" / 10'-0"	CP 13	A36	3"x.25	4'-4"

CHECK DIMENSION FOR FAB. LOCATION OF TRANS. TRUSS CL-1	CL-2	CL-3	CL-4	Fs
12'-10 1/2"	26'-2 1/2"	—	—	7'-4 1/2"

CORE END

EL END TRUSS DESIGNATION	BEARING ANGLES MK.	TYPE STEEL	CHORD SIZE	LENGTH	WEv	DIAGONAL "Tv" STRUT MK.	TYPE STEEL	DIA.	LENGTH	VERTICAL "STv" STRUT MK.	TYPE STEEL	DIA.	LENGTH	END STIFFENER MK. V1 TYPE STEEL	DIA	LENGTH	MK. V2 TYPE STEEL	DIA.	LENGTH	MK. V4 TYPE STEEL	DIA.	LENGTH	DOUBLE STRUT MK.	TYPE STEEL	DIA.	LENGTH	DOUBLE STRUT MK.	TYPE STEEL	DIA.	LENGTH	PCS
C32T23-L	9v	A242	2"x1 1/2"x.25	10"	2'-8 1/4"	10	A242	.98	3'-6 1/4"	5	A242	.98	2'-4 7/8"	A242	.98	4 3/8"	A242	.98	7 3/8"	—	—	—	—	—	—	—	—	—	—	—	—

STEEL TRUSS DETAILS
FOR
WORLD TRADE CENTER - N.Y.C.
FOR
THE PORT OF NEW YORK AUTHORITY

FLOOR TRUSS C32T23-L 35'-8" OVERALL (SEE NOTE NO. 2)
WORLD TRADE CENTER TOWERS A-B

FABRICATION BY: LACLEDE STEEL COMPANY		
FABRICATED AT MADISON, ILLINOIS	DESIGN DRAWING NO. 7-ABI-22	PLATE
APPROVED FOR FABRICATION BY: [illegible] FOR P.O.N.Y.A. DATE 10/23/68	DRAWN BY: [illegible] DATE SEPT. 6, 1968	
APPROVED FOR FABRICATION BY: FOR FABRICATOR DATE	CHECKED BY: T.M. CHURA DATE SEPT. 9, 1968	IN CHARGE OF PROD. DEV.
DETAILED BY: A. CARL WEBER	FABRICATION CONT. NO. W.T.C. 221	SHEET NO. ST 223-L

ALL PANEL POINTS RESISTANCE WELDED (X).
ARC WELDS INDICATED AT SHADED AREAS AND AT BOTTOM CHORD WEB SPLICES.
ALL WELD DETAILS SHOWN ON SHEETS ST290, 291, 292, 293 & ST283.
SEE SHEET ST295 FOR V1 & V2

CHORD PLATE DETAILS SHOWN ON SHEET ST283.
LETTERS IN HEXAGON INDICATE WELD DETAIL, i.e., (A)
LETTERS & NUMBERS IN SQUARES INDICATE RESISTANCE WELD STRENGTH IDENTIFIED IN THE QUALITY CONTROL PROGRAM, i.e., [R5]

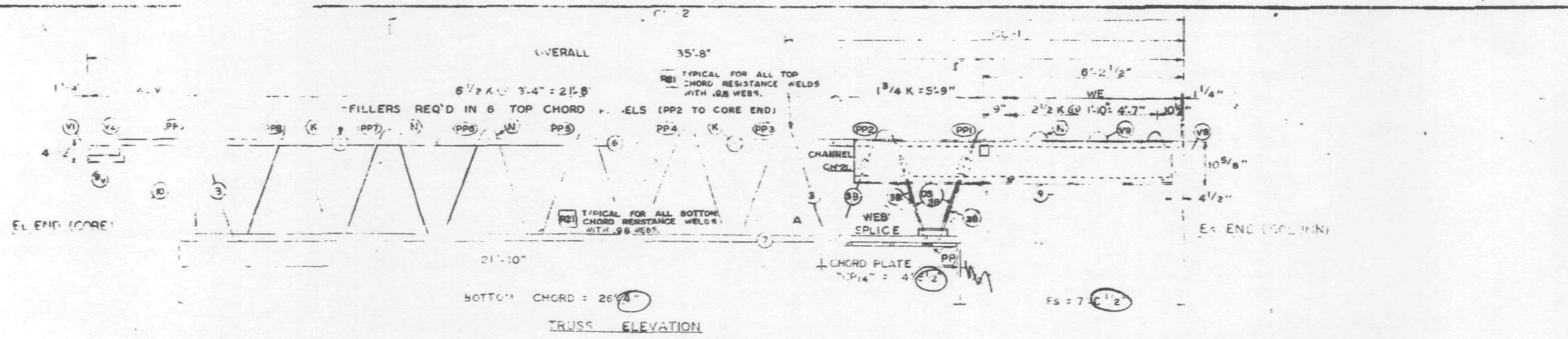

TRUSS ELEVATION

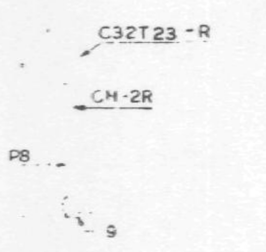

NOTE 2
ALL DETAILS & ELEVATIONS SHOWN FOR C32T23-L TRUSSES ARE APPLICABLE TO C32T23-R TRUSSES WITH CHANNEL & PLATE PLACED ON OPP. HAND.
CH-2L TO BE USED WITH C32T23-L
CH-2R " " " " C32T23-R
SEE SHEET ST 407 FOR CHANNEL DETAILS.

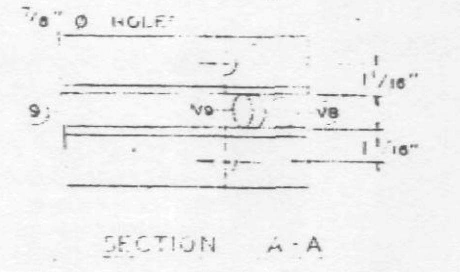

SECTION A-A

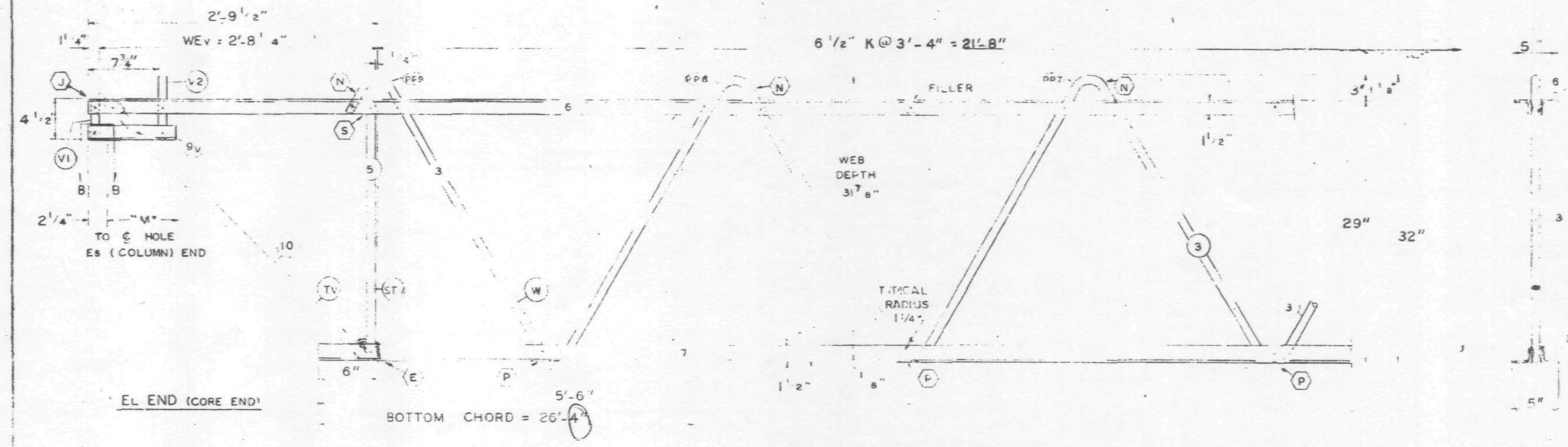

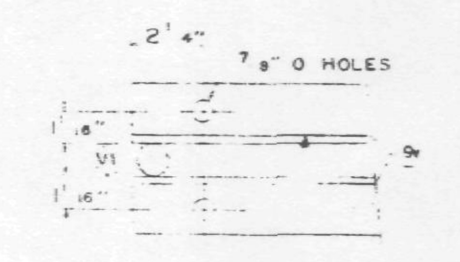

SECTION B-B

FABRICATION REQUIREMENTS	DESIGN	TOLERANCE
CAMBER AT MIDSPAN	3/8"	3/8"
DESIGN DEPTH	29"	± 1/4"
PANEL "K"	3'-4"	± 4"
OVERALL LENGTH	35'-8"	± 3/8"
WEB DEPTH	31 - 9"	± 1/4"
CL DIMENSIONS	—	± 3/8"

NO.	DATE	REVISION	BY
1	10-4-68	GENERAL	T.M.C

REF. DRWG.	
7-ABI-22	8-13-68
7-ABI-52	2-15-68
7-ABI-53	7-22-68
7-ABI-54	8-15-68
7-ABI-54-55-56	8-15-68
SA-124	8-1-68

BUILDING PLANS
CHRISTIANSEN ROBERTSON
Structural & Civil Engineers
X
10/15/68 SL

PAINT: LACLEDE ELECTROCOAT RED NO 10001

TRUSS DESIGNATION	TOP CHORD TWO ANGLES MK.	TYPE STEEL	CHORD SIZE	LENGTH	BOTTOM CHORD TWO ANGLES MK.	TYPE STEEL	CHORD SIZE	LENGTH	MAIN WEB "W" MK.	TYPE STEEL	DIA.	LENGTH	NO. OF "K" (SEE NOTE 1)	FILLER NO.	DIA.	"M" C/C HOLE	CONNECTION FILLERS NO.	DIA.	LENGTH	CHORD PLATE TYPE STEEL	SIZE	LENGTH	CHANNEL PLATES MK.	TYPE STEEL	PCS.	SIZE	LENGTH	REINF. ANGLE (2 REQ'D) MK.	TYPE STEEL	SIZE	LGTH.	TRUSS DATA
C32T23-L	6	A242	2"x1 1/2"x.25	35'-8"	7	A242	2"x1 1/2"x.25	26'-4"	3 / 3B	A242 / A242	.98 / .98	40'-11 1/4" / 10'-7 5/8"	6 1/2 K / 1 3/4 K	6	.98	35'-2 3/4"	—	—	—				P8	A36	3	4"x39	5 1/2"	RA1	A242	2"x1 1/2"x.25	7 1/2"	

COLUMN END

Es END DESIGNATION	MK.	TYPE STEEL	CHORD SIZE	PCS.	LENGTH		MK.	TYPE STEEL	DIA.	LENGTH	PCS.	END STIFFENER MK. V6 TYPE STEEL	DIA.	LENGTH	MK. V9 TYPE STEEL	DIA.	LENGTH	MK. V10 TYPE STEEL	DIA.	LENGTH	CHANNEL MK.	TYPE STEEL	CHANNEL SIZE	NOTE NO. 2 LENGTH	CHORD PLATE MK.	TYPE STEEL	SIZE	LENGTH
C32T23-L	8	A242	2"x1 1/2"x.25	2	10'-4 1/2"	5'-4 1/4"	DS / 3B	A242	.98	2'-6 3/4"	2	A242	.98	10 1/2"	A242	.98	8'-3 7/8"	—	—	—	CH2L / CH2R	A36 / A36	10 [30 / 10 [30	10'-0" / 10'-0"	CP 14	A36	4 1/2x.75 (3x.25)	4'-5 1/2"

CHECK DIMENSION FOR FAB. LOCATION OF TRANS. TRUSS CL-1	CL-2	CL-3	CL-4	Fs
12'-10 1/2"	26'-2 1/2"	—	—	7'-0 1/2"

CORE END

EL END TRUSS DESIGNATION	BEARING MK.	TYPE STEEL	CHORD SIZE	LENGTH		MK.	TYPE STEEL	DIA.	LENGTH	MK.	TYPE STEEL	DIA.	LENGTH	END STIFFENER TYPE STEEL	DIA.	LENGTH	TYPE STEEL	DIA.	LENGTH	MK. V4 STEEL	DIA.	LENGTH	DOUBLE STRUT MK.	TYPE STEEL	DIA.	LENGTH	DOUBLE STRUT MK.	TYPE STEEL	DIA.	LENGTH	PCS
C32T23-L	9v	A242	2"x1 1/2"x.25	10"	2'-8 1/4"	10	A242	.98	3'-6 1/4"	5	A242	.98	2'-4 7/8"	A242	.98	4 3/8"	A242	.98	7 3/8"	—	—	—	—	—	—	—	—	—	—	—	—

STEEL TRUSS DETAILS
FOR
WORLD TRADE CENTER - N.Y.C.
FOR
THE PORT OF NEW YORK AUTHORITY

FLOOR TRUSS C32T23-L 35'-8" OVERALL (SEE NOTE NO. 2)
WORLD TRADE CENTER TOWERS A-B

FABRICATION BY LACLEDE STEEL COMPANY

FABRICATED AT MADISON	DESIGN DRAWING NO. 7-ABI-22	PLATE
APPROVED FOR FABRICATION DATE BY FOR	DRAWN BY luh DATE SEPT. 6, 1968	
APPROVED FOR FABRICATION DATE BY FOR FABRICATOR	CHECKED BY: T.M.CHURA DATE SEPT. 9, 1968	IN CHARGE OF PROD. DEV.
DETAILED BY	FABRICATION CONT. NO. W.T.C. 221	SHEET NO. ST 223-L

CHORD PLATE DETAILS SHOWN ON SHEET ST283.
LETTERS IN HEXAGON INDICATE WELD DETAIL, i.e. (A)
LETTERS & NUMBERS IN SQUARES INDICATE RESISTANCE WELD STRENGTH IDENTIFIED IN THE QUALITY CONTROL PROGRAM, i.e. R5

FABRICATION REQUIREMENTS	DESIGN	TOLERANCE
CAMBER AT MIDSPAN	[illegible]	3/8"
DESIGN DEPTH	[illegible]	[illegible]
PANEL "K"	[illegible]	[illegible]
OVERALL LENGTH	35'-8"	[illegible]
WEB DEPTH	[illegible]	±1
CL DIMENSIONS	—	[illegible]

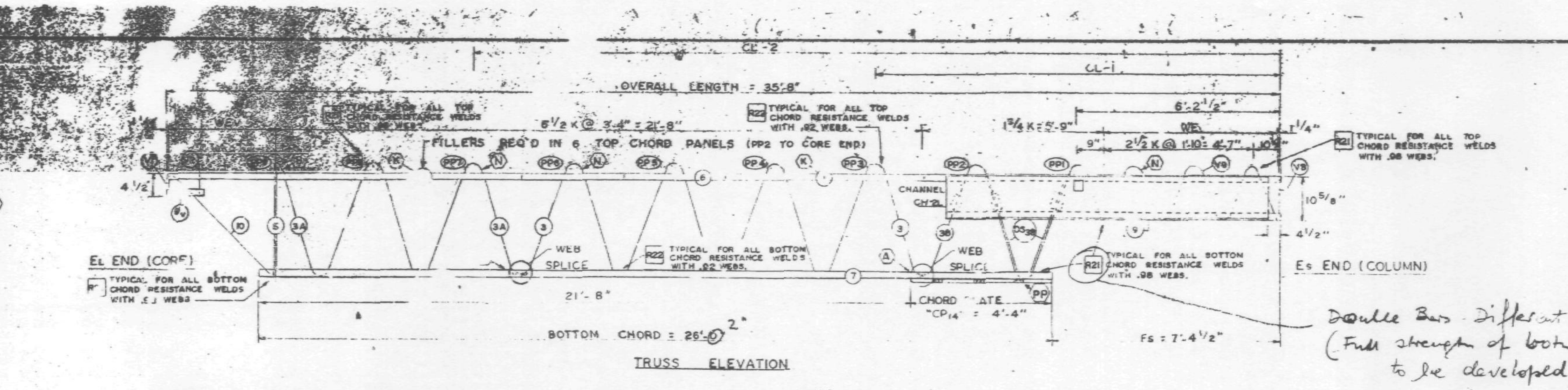

TRUSS ELEVATION

Double Bars Different R-values! (Full strength of both web bars to be developed)

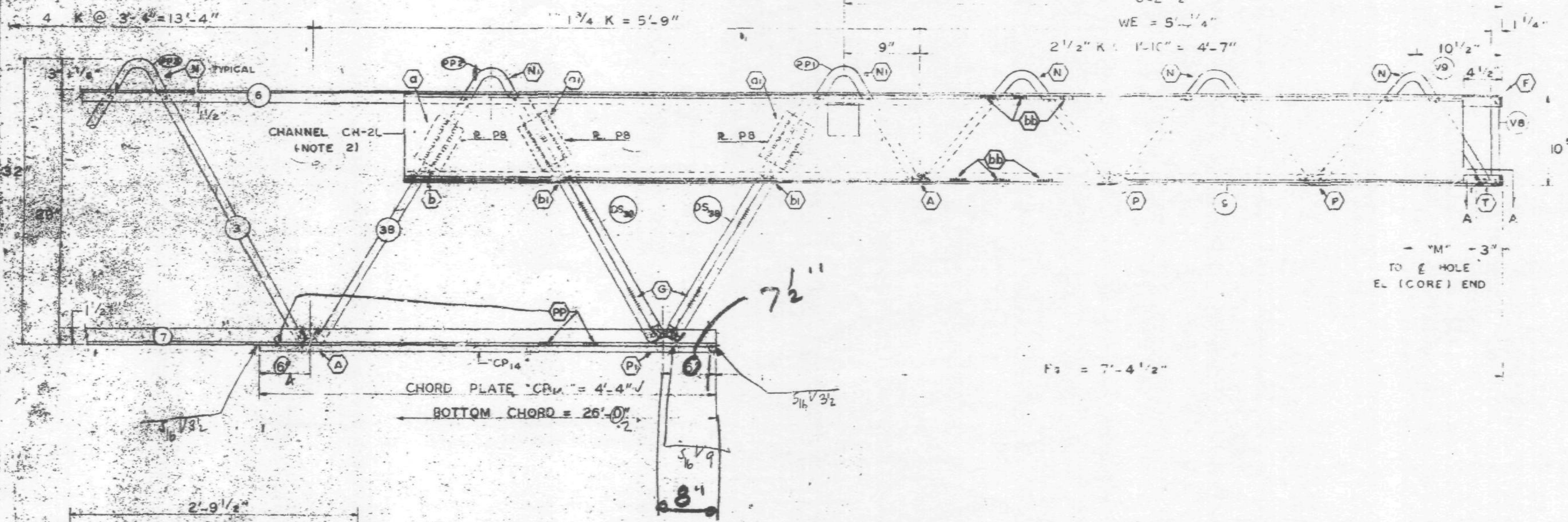

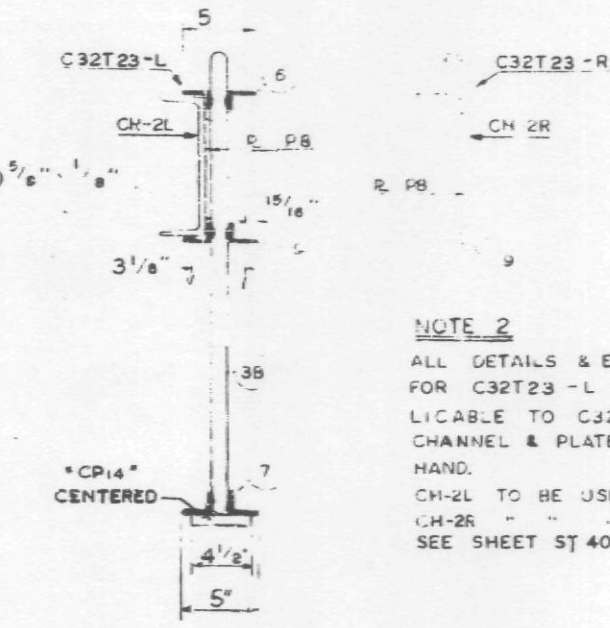

NOTE 2
ALL DETAILS & ELEVATIONS SHOWN FOR C32T23-L TRUSSES ARE APPLICABLE TO C32T23-R TRUSSES WITH CHANNEL & PLATE PLACED ON OPP. HAND.
CH-2L TO BE USED WITH C32T23-L
CH-2R " " " C32T23-R
SEE SHEET ST 407 FOR CHANNEL DETAILS.

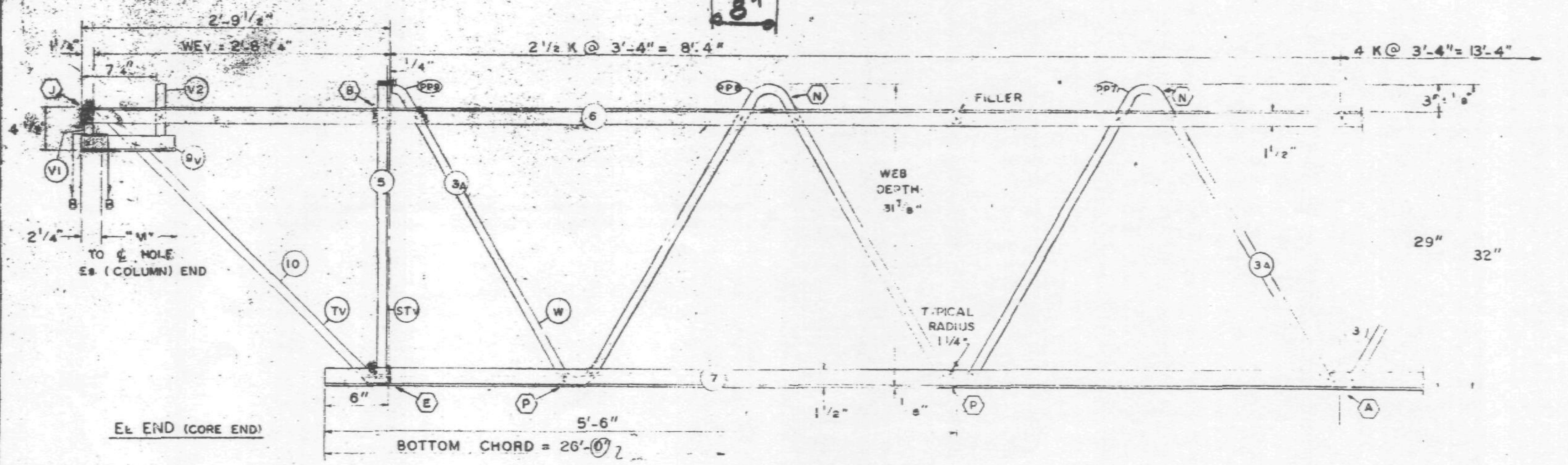

EL END (CORE END)

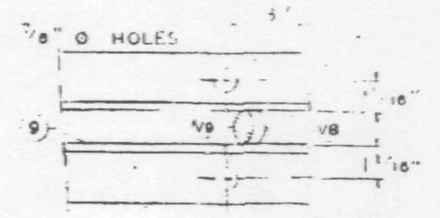

SECTION A-A

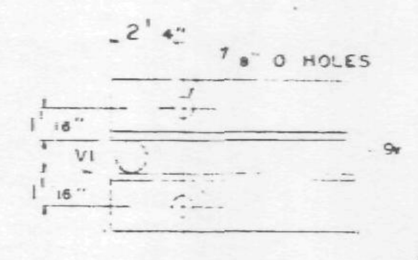

SECTION B-B

REF. DRWG.		
	7-ABI-22	8-13-68
	7-ABI-52	2-15-68
	7-ABI-53	7-22-68
	7-ABI-54	8-15-68
	7-?64-53-56	8-15-68
	SA-124	8-1-68

PAINT: LACLEDE ELECTROCOAT RED NO. 10001

TRUSS DESIGNATION	TOP CHORD TWO ANGLES MK.	TYPE STEEL	CHORD SIZE	LENGTH	BOTTOM CHORD TWO ANGLES MK.	TYPE STEEL	CHORD SIZE	LENGTH	MAIN WEB "W" MK.	TYPE STEEL	DIA.	LENGTH	NO OF "K" SEE NOTE 1	FILLER NO.	DIA.	"M" C/C HOLE	CONNECTION FILLERS NO.	DIA.	LENGTH	CHORD PLATE MK.	TYPE STEEL	SIZE	LENGTH	CHANNEL PLATES MK	TYPE STEEL	PCS.	SIZE	LENGTH	TRUSS DATA	
C32T23-L	6	A242	2"x1½"x.25	35'-8"	7	A242	2"x1½"x.25	26'-0" 2"	3 3A 3B	A242 A242 A242	.92 .98 .98	24'-11" 15'-6⅞" 10'-7⅜"	4 K@ 3'-4"=13'-4" 2½ K@ 3'-4"= 8'-4" 1¾ K@ 3'-4"= 5'-9"	6	.92	35'-2¾"	—	—	—					P8	A36	3	4"x¼" 4½x.39	6" 5½"		

COLUMN END	Es END	TRUSS DESIGNATION	BEARING ANGLES MK.	TYPE STEEL	CHORD SIZE	PCS	LENGTH	WE	DOUBLE STRUT MK.	TYPE STEEL	DIA.	LENGTH	PCS.	END STIFFENER MK. V8 TYPE STEEL	DIA	LENGTH	MK. V9 TYPE STEEL	DIA.	LENGTH	MK. V10 DIA.	LENGTH	CHANNEL MK.	TYPE STEEL	CHANNEL SIZE	NOTE NO. 2 LENGTH	CHORD PLATE MK.	TYPE STEEL	SIZE	LENGTH
		C32T23-L	9 —	A242 —	2x1½x.25 —	2 —	10'-4⅛" —	5'-4¼"	DS 3B	A242	.98	2'-6¾"	2	A242	.98	10½"	A242	.98	8'-3⅞"	—	—	CH2L CH2R	A36 A36	10.3 30 10.3 30	10'-0" 10'-0"	CP 14	A36	4½x.75 4¼	4'-4"

CHECK DIMENSION FOR FAB. LOCATION OF TRANS. TRUSS CL-1	CL-2	CL-3	CL-4	Fs
12'-10½"	26'-2½"	—	—	7'-4½"

CORE END	CL END	TRUSS DESIGNATION	BEARING ANGLES MK.	TYPE STEEL	CHORD SIZE	LENGTH	WEV	DIAGONAL "Tv" STRUT MK.	TYPE STEEL	DIA.	LENGTH	VERTICAL "STv" STRUT MK.	TYPE STEEL	DIA.	LENGTH	END STIFFENER MK. V1 TYPE STEEL	DIA	LENGTH	MK. V2 TYPE STEEL	DIA.	LENGTH	MK. V4 TYPE STEEL	DIA.	LENGTH	DOUBLE STRUT MK.	TYPE STEEL	DIA.	LENGTH	DOUBLE STRUT MK.	TYPE STEEL	DIA.	LENGTH	PCS
		C32T23-L	9V	A242	2"x1½"x.25	10"	2'-8¼"	10	A242	.98	3'-6¼"	5	A242	.98	2'-7⅞"	A242	.98	4⅜"	A242	.98	7⅜"	—	—	—	—	—	—	—	—	—	—	—	—

10/1/68 [illegible]

STEEL TRUSS DETAILS
FOR
WORLD TRADE CENTER - N.Y.C.
FOR
THE PORT OF NEW YORK AUTHORITY

FLOOR TRUSS C32T23-L 35'-8" OVERALL (SEE NOTE NO. 2)
WORLD TRADE CENTER TOWERS A-B

FABRICATION BY LACLEDE STEEL COMPANY			
FABRICATED AT MADISON, ILLINOIS		DESIGN DRAWING NO. 7-ABI-22	PLATE
APPROVED FOR FABRICATION BY ____ FOR P.O.N.Y.A.	DATE	DRAWN BY [illegible] DATE SEPT. 6, 1968	
APPROVED FOR FABRICATION BY ____ FOR FABRICATOR	DATE	CHECKED BY T.M.CHURA DATE SEPT. 9, 1968	IN CHARGE OF PROD. DEV.
DETAILED BY A. CARL WEBER		FABRICATION CONT. NO. W.T.C. 221	SHEET NO. ST 223-L

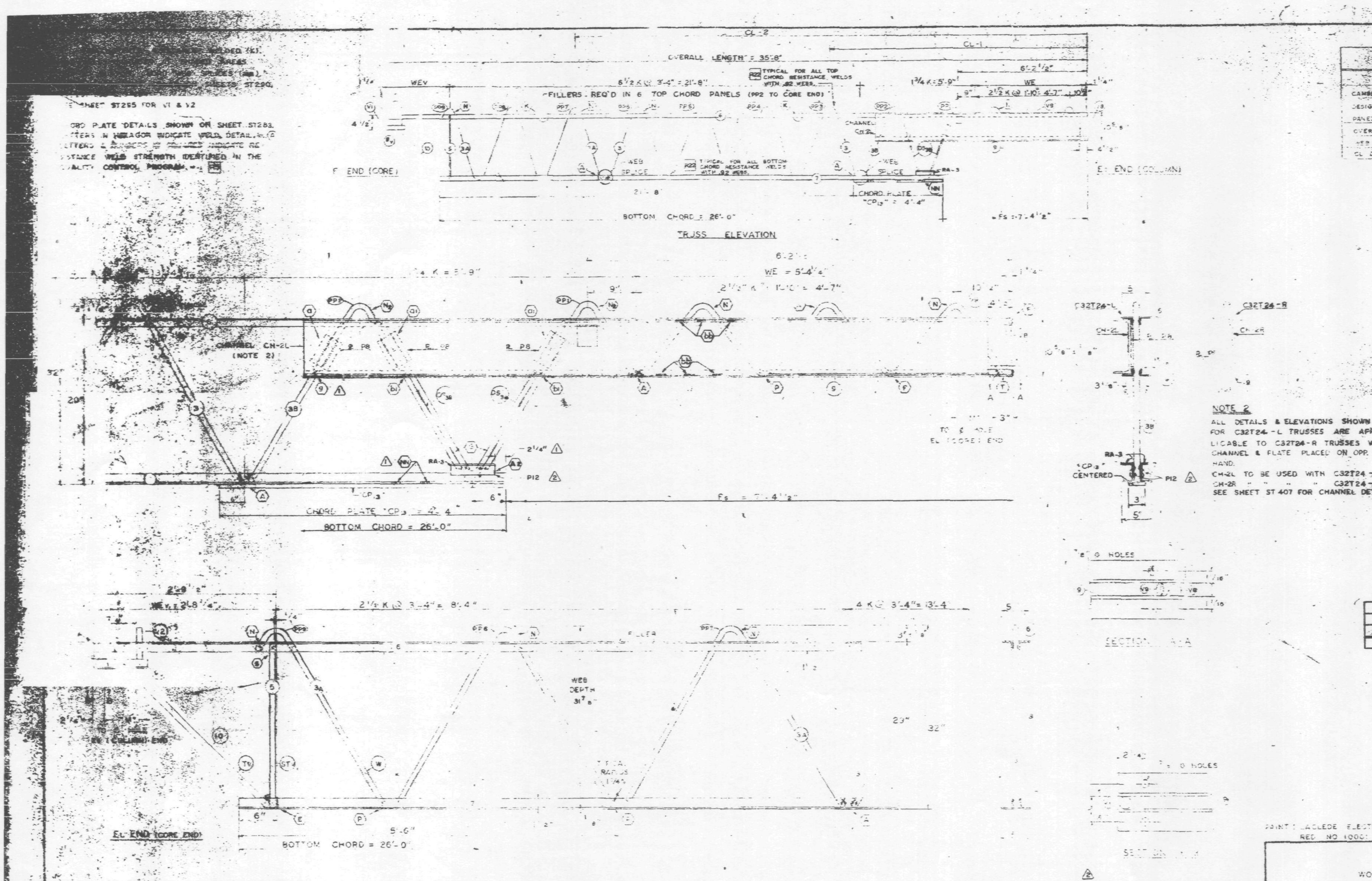

NOTE 2
ALL DETAILS & ELEVATIONS SHOWN FOR C32T24-L TRUSSES ARE APPLICABLE TO C32T24-R TRUSSES WITH CHANNEL & PLATE PLACED ON OPP. HAND.
CH-2L TO BE USED WITH C32T24-L
CH-2R " " " " C32T24-R
SEE SHEET ST 407 FOR CHANNEL DETAILS.

NO.	DATE	REVISION
2	12-26-68	AS NOTED
1	11-7-68	AS NOTED

REF. DRWG.

7-ABI-22	10-4-68
7-ABI-52	2-18-68
7-ABI-53	7-22-68
7-ABI-54	11-25-68
7-A64-53-56	10-4-68
SA-124	10-11-68

PAINT: LACLEDE ELECTROCOAT RED NO. 1000

TRUSS DESIGNATION	TOP CHORD TWO ANGLES MK.	TYPE STEEL	CHORD SIZE	LENGTH	BOTTOM CHORD TWO ANGLES TYPE STEEL	SIZE	LENGTH	MAIN WEB "W" TYPE STEEL	DIA	LENGTH	NO. OF SEE NOTE	FILLER	CONNECTION FILLERS	CHORD PLATE	PLATES MK.	TYPE STEEL	SIZE	LENGTH	SPEC. PLATES (2 REQ'D) MK.	TYPE STEEL	SIZE	LGTH.	REINF. ANGLE (2 REQ'D) MK.	TYPE STEEL	SIZE	LGTH
C32T24-L	6	A242	2"x1½"x.25	35'-8"	A242	2"x1½"x.25	26'-0"	A242 / A242 / A242	.92 / .98 / .92	[illegible]	4 K @ 3'-4" = 13'-4" / 2½ K @ 3'-4" = 8'-4" / 1¾ K @ 3'-4" = 5'-9"	6 .92 35'-2¾"	—	—	P8	A36	3 4½x3/8	5½"	P12	A36	1½"x3/8"	7½"	RA	A242	2"x1½"x.25	7½"

COLUMN END

Es END	TRUSS DESIGNATION	BEARING ANGLES MK.	TYPE STEEL	CHORD SIZE	PCS	LENGTH	WE	STRUT MK.	TYPE STEEL	DIA	LENGTH	PCS	END STIFFENER MK. V8 TYPE STEEL	DIA	LENGTH	MK. V9 TYPE STEEL	DIA	LENGTH	CHANNEL MK.	TYPE STEEL	CHANNEL SIZE	LENGTH	CHORD PLATE MK.	TYPE STEEL	SIZE	LENGTH	CL-1	CL-2	CL-3	CL-4	Fs
	C32T24-L					10'-4½"	5'-4¼"		A242	.92	2'-8¾"	2	A242	.92	10½"	A242	.92	8'-3⅞"	CH2L / CH2R	A36 / A36	10 ⌷ 30 / 10 ⌷ 30	10'-0 / 10'-0	13	A36	3"x.25	4'-4"	2'-10½"	25'-2½"	—	—	7'-4½"

CORE END

EL END	TRUSS DESIGNATION	BEARING ANGLES MK.	TYPE STEEL	CHORD SIZE	LENGTH	WEv	DIAGONAL "TV" STRUT MK.	TYPE STEEL	DIA	LENGTH	VERTICAL "STV" STRUT MK.	TYPE STEEL	DIA	LENGTH	END STIFFENER MK. V1 TYPE STEEL	DIA	LENGTH	MK. V2 TYPE STEEL	DIA	LENGTH	MK. V4 TYPE STEEL	DIA	LENGTH	DOUBLE STRUT	DOUBLE STRUT
	C32T24-L	9V	A242	2"x1½"x.25	10"	2'-6¼"	10	A242	.98	3'-6¼"	5	A242	.98	2'-4⅛"	A242	.98	4⅜"	A242	.98	7⅜"	—	—	—	—	—

STEEL TRUSS DETAILS
FOR
WORLD TRADE CENTER — N.Y.C.
FOR
THE PORT OF NEW YORK AUTHORITY

FLOOR TRUSS C32T24-L 35'-8" OVERALL (SEE NOTE NO. 2)
WORLD TRADE CENTER TOWERS A-B

FABRICATION BY LACLEDE STEEL COMPANY
FABRICATED AT MADISON, ILLINOIS
DESIGN DRAWING NO. 7-ABI-22
PLATE 7
APPROVED FOR FABRICATION FOR P.O.N.Y.A. James White DATE 1/13/69
APPROVED FOR FABRICATION BY ______ FOR FABRICATOR DATE ______
DRAWN BY: [illegible] DATE SEPT 23, 1968
CHECKED BY: T.M.CIRURA DATE SEPT 24, 1968
IN CHARGE OF PROD. [illegible]
DETAILED BY: A. CARL WEBER
FABRICATION CONT. NO. W.T.C. 221
SHEET NO. ST 224

PANEL POINTS RESISTANCE WELDED (X).
WELDS INDICATED AT SHADED AREAS
AT BOTTOM CHORD WEB SPLICES (▭).
WELD DETAILS SHOWN ON SHEETS ST2_0, 2__, 2__ & ST283.
SHEET ST295 FOR V1 & V2

PLATE DETAILS SHOWN ON SHEET ST283.
LETTERS IN HEXAGON INDICATE WELD DETAIL, ie. (A)
LETTERS & NUMBERS IN SQUARES INDICATE RESISTANCE WELD STRENGTH IDENTIFIED IN THE QUALITY CONTROL PROGRAM, ie. ▭

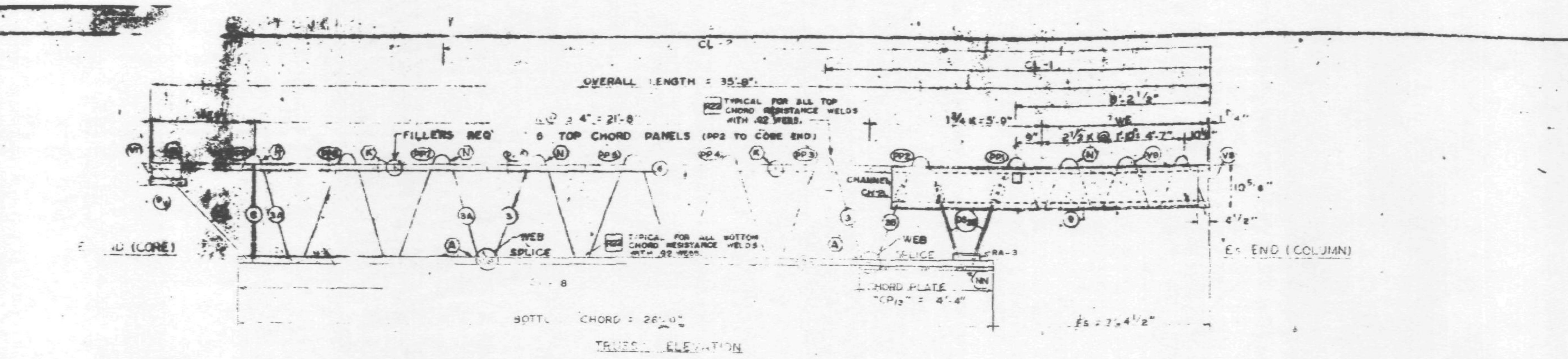

FABRICATION REQUIRE.	DESIGN	TOLERANCE
CAMBER AT MIDSPAN	5/8"	[illegible]
DESIGN DEPTH	29"	[illegible]
PANEL "K"	3'-4"	[illegible]
OVERALL LENGTH	35'-8"	4 3/16"
WEB DEPTH	[illegible]	[illegible]
CL DIMENSIONS	—	[illegible]

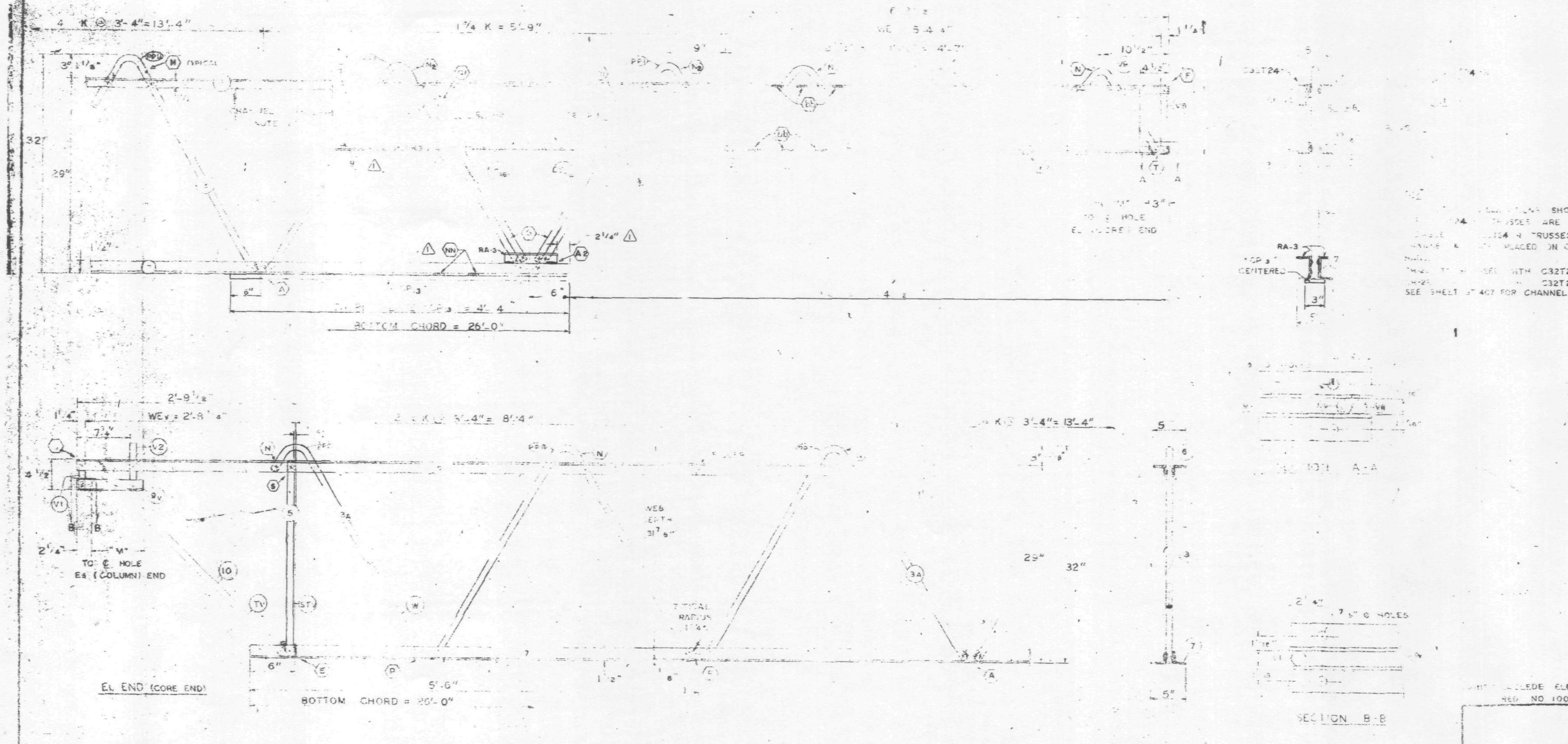

1	11-7-68	AS NOTED	G.D.C.
NO.	DATE	REVISION	BY

△1 REF. DRWG.	
7-ABI-22	10-4-68
7-ABI-52	2-15-68
7-ABI-53	7-22-68
7-ABI-54	10-4-68
7-AB4-53,56	10-4-68
SA-124	10-11-68

PAINT LACLEDE ELECTROCOAT RED NO 10001

TRUSS DESIGNATION	TOP CHORD TWO ANGLES MK.	TYPE STEEL	CHORD SIZE	LENGTH	BOTTOM CHORD TWO ANGLES MK.	TYPE STEEL	CHORD SIZE	LENGTH	MAIN WEB "W" MK.	TYPE STEEL	DIA.	LENGTH	NO. OF "K" SEE NOTE 1	FILLER NO.	DIA.	C/C HOLE	CONNECTION FILLERS	CHORD PLATE TYPE STEEL	SIZE	LENGTH	CHANNEL PLATES MK.	TYPE STEEL	PCS.	SIZE	LENGTH	TRUSS DATA	REINF. ANGLE (2 REQ'D) MK.	TYPE STEEL	SIZE	LGTH.
C32T24-L	6	A242	2"x 1 1/2"x.25	35'-8"	7	A242	2"x 1 1/2"x.25	26'-0"	3 / 3A / 3B	A242 / A242 / A242	.92 / .98 / .92	24'-11" / 16'-0 1/4" / 10'-7 1/8"	4 K @ 3'-4" = 13'-4" / 2 1/2 K @ 3'-4" = 8'-4" / 1 3/4 K @ 3'-4" = 5'-9"	6	.92	35'-2 3/4"	—	—	—	—	P8	A36	3	4 1/2 x 3/8	5 1/2"		RA#	A242	2"x1 1/2"x.25	7 1/2"

COLUMN END

Es END TRUSS DESIGNATION	BEARING ANGLES MK.	TYPE STEEL	CHORD SIZE	PCS	LENGTH	W.E.	DOUBLE STRUT MK.	TYPE STEEL	DIA.	LENGTH	PCS.	END STIFFENER MK. V8 TYPE STEEL	DIA	LENGTH	MK. V9 TYPE STEEL	DIA.	LENGTH	MK. V10 TYPE STEEL	DIA.	LENGTH	CHANNEL MK.	TYPE STEEL	CHANNEL SIZE	NOTE NO. 2 LENGTH	CHORD PLATE MK.	TYPE STEEL	SIZE	LENGTH
C32T24-L	9	A242	2x1 1/2x.25	2	10'-4 7/8"	5'-4 1/4"	3S / 3B	A242	.92	2'-6 3/4"	2	A242	.92	10 1/2"	A242	.92	8'-3 7/8"	—	—	—	CH2 / CH2B	A36 / A36	10 ⊏ 30 / 10 ⊏ 30	10'-0 / 10'-0"	CP13	A36	3"x.25	4'-4"

CHECK DIMENSION FOR FAB. LOCATION OF TRANS. TRUSS CL-1	CL-2	CL-3	CL-4	Fs
12'-10 1/2"	26'-2 1/2"	—	—	7'-4 1/2"

CORE END

El END TRUSS DESIGNATION	BEARING ANGLES MK.	TYPE STEEL	CHORD SIZE	LENGTH	WEv	DIAGONAL "Tv" STRUT MK.	TYPE STEEL	DIA.	LENGTH	VERTICAL "STv" STRUT MK.	TYPE STEEL	DIA.	LENGTH	END STIFFENER MK. V1 TYPE STEEL	DIA.	LENGTH	MK. V2 TYPE STEEL	DIA.	LENGTH	MK. V4 TYPE STEEL	DIA.	LENGTH	DOUBLE STRUT MK.	TYPE STEEL	DIA.	LENGTH	DOUBLE STRUT MK.	TYPE STEEL	DIA.	LENGTH	PCS
C32T24-L	9V	A242	2x1 1/2x.25	10"	2'-8 1/4"	10	A242	.98	3'-6 3/4"	5	A242	.98	2'-4 7/8"	A242	.98	4 3/8"	A242	.98	7 7/8"	—	—	—	—	—	—	—	—	—	—	—	—

STEEL TRUSS DETAILS
FOR
WORLD TRADE CENTER - N.Y.C.
FOR
THE PORT OF NEW YORK AUTHORITY

FLOOR TRUSS C32T24-L , 35'-8" OVERALL (SEE NOTE NO. 2)
WORLD TRADE CENTER TOWERS A-8

FABRICATION BY: LACLEDE STEEL COMPANY
FABRICATED AT MADISON, ILLINOIS
DESIGN DRAWING NO. 7-ABI-22
PLATE 2
APPROVED FOR FABRICATION FOR P.O.N.Y.A. DATE 11/18/68
DRAWN BY [illegible] DATE SEPT. 23, 1968
APPROVED FOR FABRICATION FOR FABRICATOR BY: DATE
CHECKED BY T.M.CHURA DATE SEPT. 24, 1968
DETAILED BY: LACLEDE STEEL CO.
FABRICATION CONT. NO. [illegible]
SHEET NO. [illegible]

ALL WELD DETAILS SHOWN ON SHEETS ST290, 292, 293 & ST283.
SEE SHEET ST295 FOR V1 & V2

CHORD PLATE DETAIL SHOWN ON SHEET ST283.
LETTERS & NUMBERS IN SQUARES INDICATE RESISTANCE WELD STRENGTH IDENTIFIED IN THE QUALITY CONTROL PROGRAM

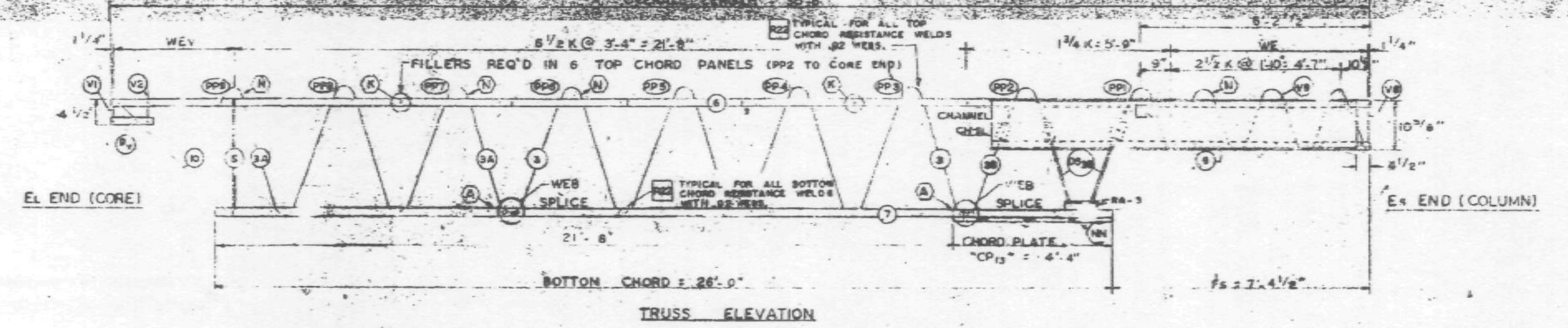

TRUSS ELEVATION

FABRICATION REQUIREMENTS	DESIGN	TOLERANCE
CAMBER AT MIDSPAN	5/16"	3/8"
DESIGN DEPTH	29"	± 1/4"
PANEL "K"	3'-4"	± 1/4"
OVERALL LENGTH	35'-8"	± 3/8"
WEB DEPTH	31 7/8"	
CL DIMENSIONS	—	± 3/8"

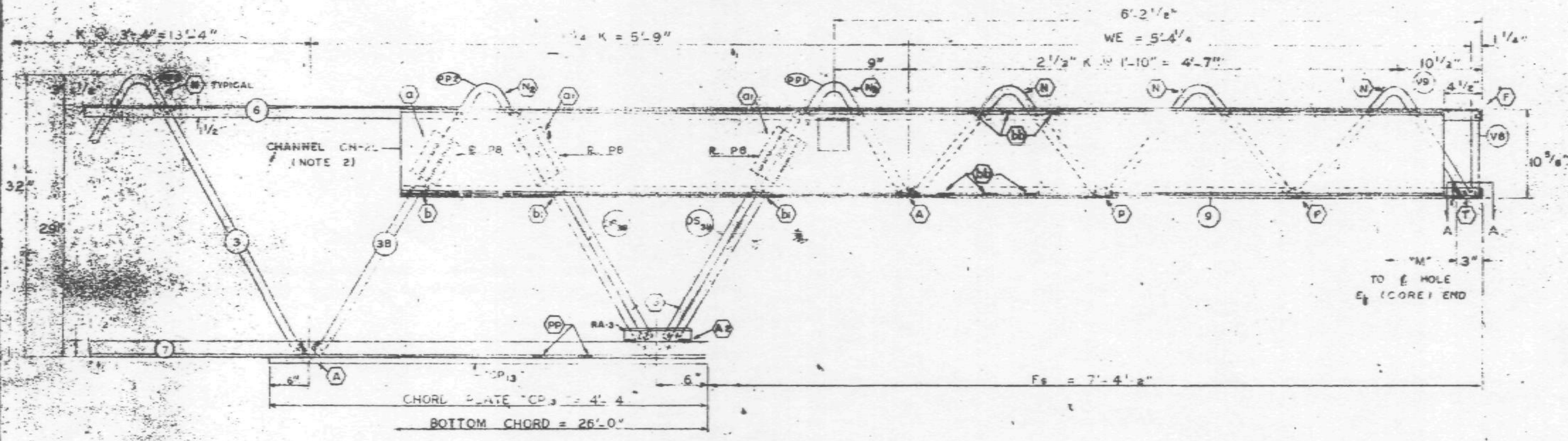

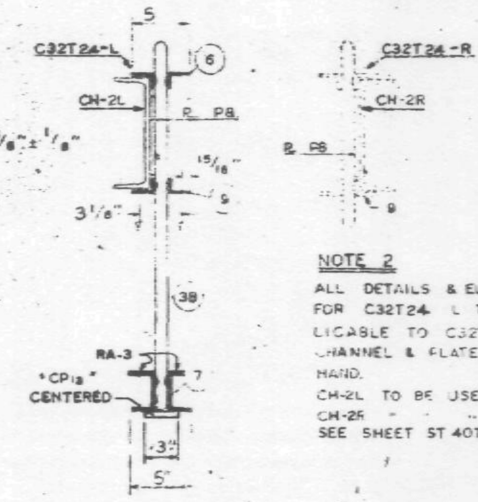

NOTE 2
ALL DETAILS & ELEVATIONS SHOWN FOR C32T24-L TRUSSES ARE APPLICABLE TO C32T24-R TRUSSES WITH CHANNEL & PLATE PLACED ON OPP. HAND.
CH-2L TO BE USED WITH C32T24-L
CH-2R " " " " C32T24-R
SEE SHEET ST 407 FOR CHANNEL DETAILS.

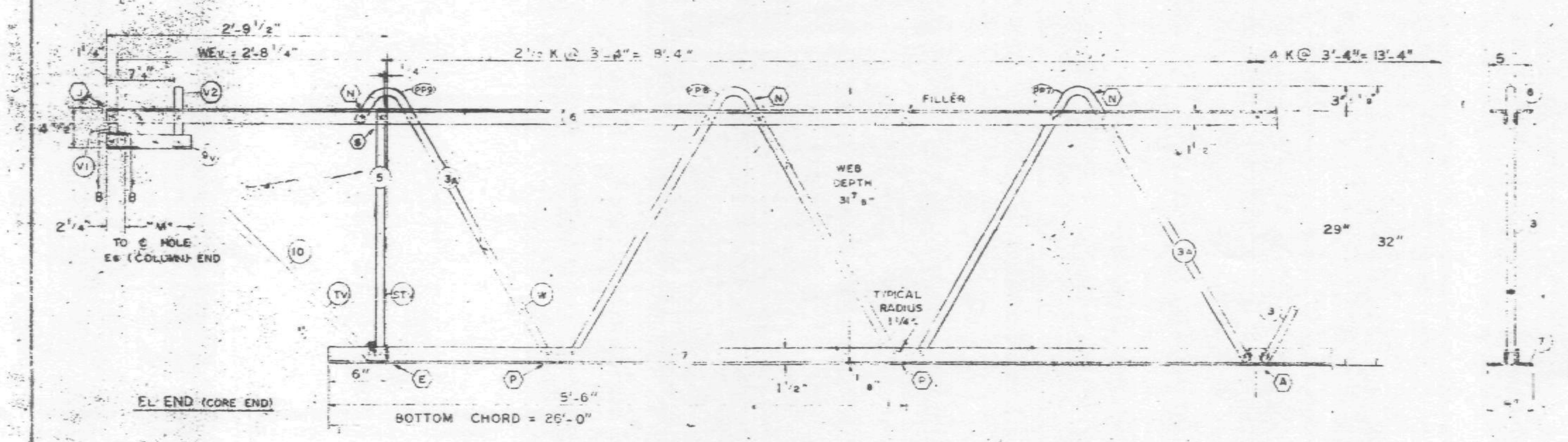

EL END (CORE END)

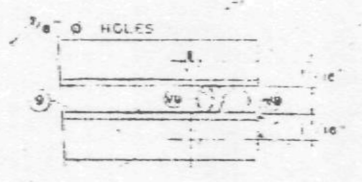

SECTION A-A

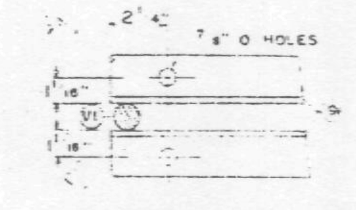

SECTION B-B

REF. DRWG. 7-ABI-[illegible] 8-13-68
7-ABI-[illegible] 2-15-68
7-ABI-[illegible] 7-22-68
7-ABI-[illegible] 8-15-68
7-[illegible] 8-15-68
SA-124 8-1-68

PAINT: LACLEDE ELECTROCOAT RED NO. 0001

TRUSS DESIGNATION	TOP CHORD TWO ANGLES MK.	TYPE STEEL	CHORD SIZE	LENGTH	BOTTOM CHORD TWO ANGLES MK.	TYPE STEEL	CHORD SIZE	LENGTH	MAIN WEB "W" MK.	TYPE STEEL	DIA.	LENGTH	NO OF "K" SEE NOTE 1	FILLER NO.	DIA.	"M" C/C HOLE	CONNECTION FILLERS NO.	DIA.	LENGTH	CHORD PLATE MK.	TYPE STEEL	SIZE	LENGTH	CHANNEL PLATES MK.	TYPE STEEL	PCS.	SIZE	LENGTH	TRUSS DATA	REINF ANGLE (2 REQ'D) MK.	TYPE STEEL	SIZE	LGTH.
C32T24-L	6	A242	2"x1 1/2"x.25	35'-8"	7	A242	2"x1 1/2"x.25	26'-0"	3 3A 3B	A242 A242 A242	.92 .98 .92	24'-11" 15'-0 1/4" 10'-7 7/8"	4 K@ 3'-4"=13'-4" 2 1/2 K@ 3'-4"= 8'-4" 1 3/4 K@ 3'-4"= 5'-8"	6	.92	35'-2 3/4"	—	—	—					P8	A36	3	4 1/2x3/8	5 1/2"		RA8	A242	2"x1 1/2"x.25	7 1/2"

COLUMN END

Es END	TRUSS DESIGNATION	BEARING ANGLES MK.	TYPE STEEL	CHORD SIZE	PCS	LENGTH	WE	DOUBLE STRUT MK.	TYPE STEEL	DIA.	LENGTH	PCS.	END STIFFENER MK. V8 TYPE STEEL	DIA.	LENGTH	MK. V9 TYPE STEEL	DIA.	LENGTH	MK. V10 TYPE STEEL	DIA.	LENGTH	CHANNEL MK.	TYPE STEEL	CHANNEL SIZE	NOTE NO. 2 LENGTH	CHORD PLATE MK.	TYPE STEEL	SIZE	LENGTH
	C32T24-L	9	A242	2x1 1/2x.25	2	10'-4 1/2"	5'-4 1/4"	3S	A242	.92	2'-6 3/4"	2	A242	.92	10 1/2"	A242	.92	6'-3 7/8"	—	—	—	[illegible]	[illegible]	[illegible]	10'-10"	CP	A36	3"x.25	4'-4"

CHECK DIMENSION FOR FAB. LOCATION OF TRANS. TRUSS CL-1	CL-2	CL-3	CL-4	Fs
12'-10 1/2"	[illegible]-2 1/2"	—	—	7'-4 1/2"

CORE END

EL END	TRUSS DESIGNATION	BEARING ANGLES MK.	TYPE STEEL	CHORD SIZE	LENGTH	WEv	DIAGONAL "Tv" STRUT MK.	TYPE STEEL	DIA.	LENGTH	VERTICAL "St" STRUT MK.	TYPE STEEL	DIA.	LENGTH	END STIFFENER MK. V1 TYPE STEEL	DIA.	LENGTH	MK. V2 TYPE STEEL	DIA.	LENGTH	MK. V4 TYPE STEEL	DIA.	LENGTH	DOUBLE STRUT MK.	TYPE STEEL	DIA.	LENGTH	DOUBLE STRUT MK.	TYPE STEEL	DIA.	LENGTH	PCS
	C32T24-L	9V	A242	2"x1 1/2"x.25	10"	2'-8 1/4"	10	A242	.98	3'-6 1/4"	5	A242	.98	2'-4 7/8"	A242	.98	4 3/8"	A242	.98	7 7/8"	—	—	—	—	—	—	—	—	—	—	—	—

STEEL TRUSS DETAILS
FOR
WORLD TRADE CENTER – N.Y.C.
FOR
THE PORT OF NEW YORK AUTHORITY

FLOOR TRUSS C32T24-L 35'-8" OVERALL (SEE NOTE NO. 2)
WORLD TRADE CENTER TOWERS A-B

FABRICATION BY LACLEDE STEEL COMPANY

FABRICATED AT MADISON, ILLINOIS		DESIGN DRAWING NO. 7-ABI-22	PLATE
APPROVED FOR FABRICATION BY: James White FOR P.O.N.Y.A.	DATE 10/29/68	DRAWN BY: [illegible] DATE SEPT 23, 1968	
APPROVED FOR FABRICATION BY: LACLEDE STEEL CO. FOR FABRICATOR	DATE	CHECKED BY: T.M. CHURA DATE SEPT 24, 1968	IN CHARGE OF PROG. DEV.
DETAILED BY: A. CARL WEBER		FABRICATION CONT. NO. W.T.C. 221	SHEET NO. ST 224-L

SEE SHEET ST256 FOR V1 & V2

CHORD PLATS DETAILS SHOWN ON SHEET ST253. LETTERS IN HEXAGON INDICATE WELD DETAIL e.g. (A). LETTERS & NUMBERS IN SQUARES INDICATE RESISTANCE WELD STRENGTH IDENTIFIED IN THE QUALITY CONTROL PROGRAM e.g. [RS]

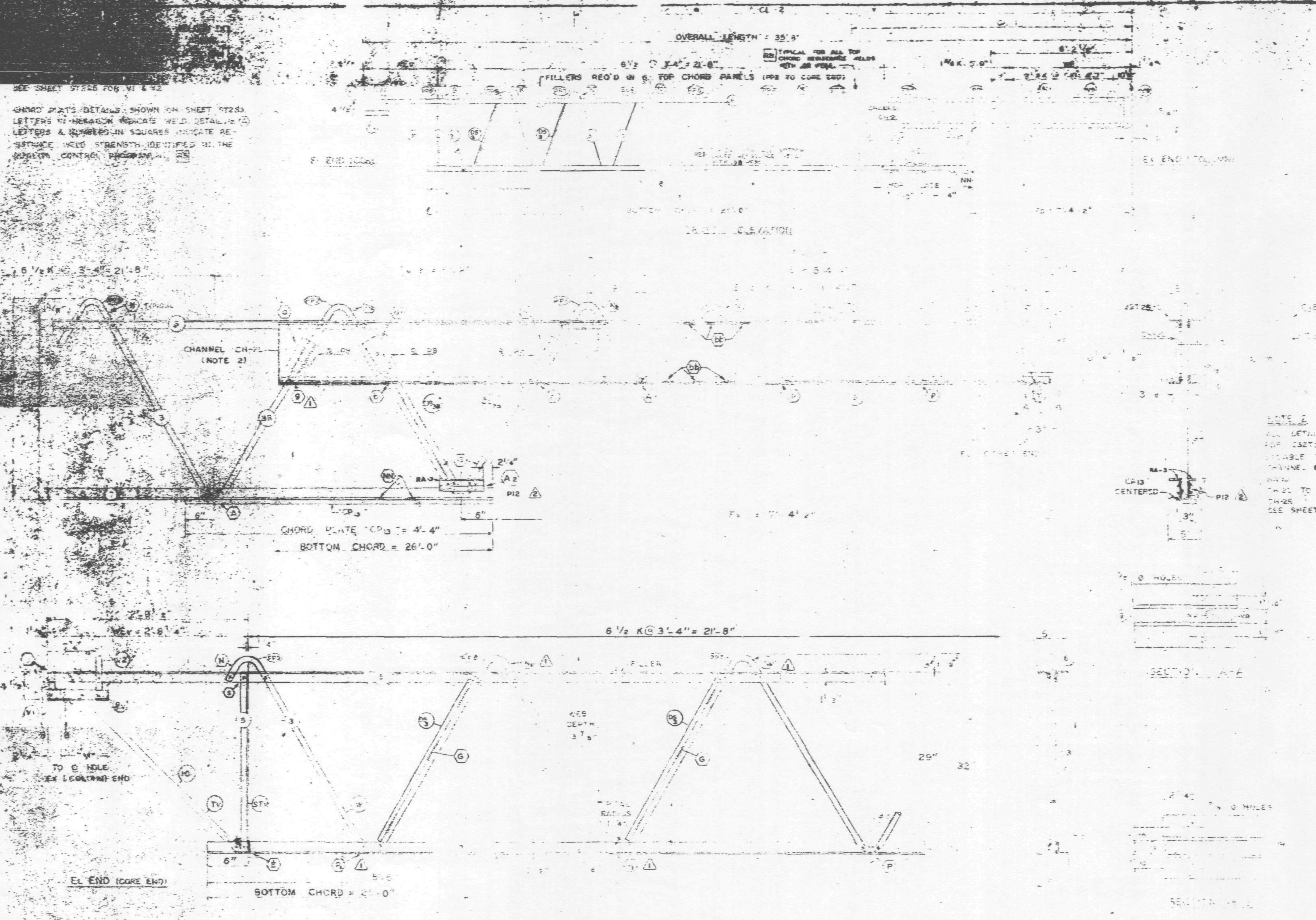

NOTE 2

ALL DETAILS & ELEVATIONS SHOWN FOR C32T25-L TRUSSES ARE APPLICABLE TO C32T25-R TRUSSES WITH CHANNEL & PLATE PLACED ON OPP. SIDE.
CH-2L TO BE USED WITH C32T25-L
CH-2R " " " " C32T25-R
SEE SHEET ST 407 FOR CHANNEL DETAILS.

NO.	DATE	REVISION	BY
2	12-26-68	AS NOTED	[illegible]
1	11-7-68	WELD DETAILS REF DRWG.	[illegible]

2 REF. DRWG.

7-ABI-23	10-4-68
7-ABI-52	2-25-68
7-ABI-53	[illegible]
7-ABI-54	11-25-68
7-AB4-53-58	10-4-68
SA-124	10-11-68

TRUSS DESIGNATION	TOP CHORD TWO ANGLES MK.	TYPE STEEL	CHORD SIZE	LENGTH	BOTTOM CHORD TWO ANGLES MK.	TYPE STEEL	CHORD SIZE	LENGTH	MAIN WEB "W"	[illegible]	SPEC. PLATES (2 REQ'D) MK.	TYPE STEEL	SIZE	LGTH.	REINF. ANGLE (2 REQ'D) MK.	TYPE STEEL	SIZE	LGTH
C32T25-L	6	A242	2"x1 1/2"x.25	35'-8"	7	A242	2"x1 1/2"x.25	26'-0"	[illegible]	[illegible]	P12	A36	[illegible]	7 1/2	RA3	A242	2"x1 1/2"x.25	7 1/2

COLUMN END

TRUSS DESIGNATION	BEARING ANGLES MK.	TYPE STEEL	CHORD SIZE	LENGTH	[illegible]
C32T25-L	9	A242	2"x1 1/2"x.25	10 1/4"	[illegible]

CORE END

TRUSS DESIGNATION	BEARING ANGLES MK.	TYPE STEEL	CHORD SIZE	LENGTH	[illegible]
C32T25-L	9	A242	2"x1 1/2"x.25	10"	[illegible]

PAINT LACLEDE ELECTROCOAT RED NO. [illegible]

STEEL TRUSS DETAILS
FOR
WORLD TRADE CENTER - N.Y.C.
FOR
THE PORT OF NEW YORK AUTHORITY

FLOOR TRUSS C32T25 35'-8" OVERALL (SEE NOTE NO. 2)
WORLD TRADE CENTER TOWERS A-B

FABRICATION BY LACLEDE STEEL COMPANY

FABRICATED AT MADISON, ILLINOIS	DESIGN DRAWING NO. 7-ABI-23	PLATE
APPROVED FOR FABRICATION FOR P.O.N.Y.A. James White DATE 1/13/69	DRAWN BY: [illegible] DATE SEPT 23, 1968	
APPROVED FOR FABRICATION OF FABRICATOR DATE	CHECKED BY: T.H. CHURA DATE SEPT 24, 1968	[illegible]
DETAILED BY A. CARL WEBER	FABRICATION CONT. NO. 221	

ALL PANEL POINTS RESISTANCE WELDED (X)
ARC WELDS INDICATED AT SHADED AREAS
AND AT BOTTOM CHORD WEB SPLICES (▪▪).
ALL WELD DETAILS SHOWN ON SHEETS ST290,
291, 292, 293 & ST283.
SEE SHEET ST2_5 FOR V1 & V2

CHORD PLATE DETAILS SHOWN ON SHEET ST293.
LETTERS IN HEXAGON INDICATE WELD DETAIL (A)
LETTERS & NUMBERS IN SQUARES INDICATE RE-
SISTANCE WELD STRENGTH IDENTIFIED IN THE
QUALITY CONTROL PROGRAM. R5

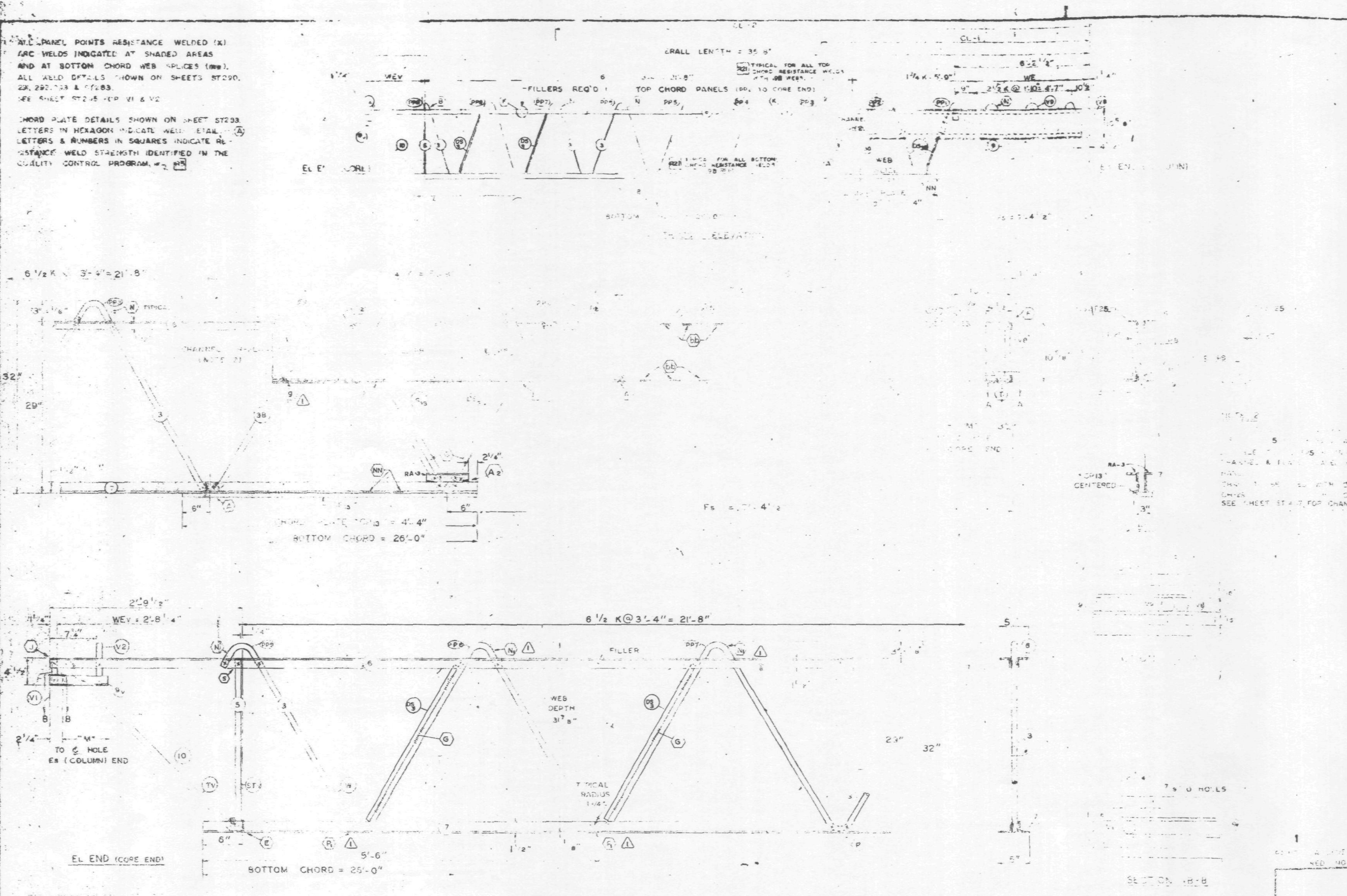

FABRICATION REQUIREMENTS

	DESIGN	TOLERANCE
CAMBER AT MIDSPAN	1 1/2"	3/8"
DESIGN DEPTH	[illegible]	1/4"
PANEL "K"	3'-4"	1/4"
OVERALL LENGTH	35'-8"	3/8"
WEB DEPTH	[illegible]	3/4"
CL DIMENSIONS	—	3/8"

NO.	DATE	REVISION	BY
1	11-7-68	WELD DETAILS, REF DRWG.	T.D.C.

⚠1 REF. DRWG.

7-ABI-23	10-4-68
7-ABI-52	2-15-68
7-ABI-53	7-22-68
7-ABI-54	10-4-68
7-ABI-55-56	10-4-68
SA-124	10-11-68

TRUSS DESIGNATION	TOP CHORD TWO ANGLES MK.	TYPE STEEL	CHORD SIZE	LENGTH	BOTTOM CHORD TWO ANGLES MK.	TYPE STEEL	CHORD SIZE	LENGTH	MAIN WEB "W" MK.	TYPE STEEL	DIA.	LENGTH	NO. OF "K" SEE NOTE 1	FILLER NO.	DIA.	℄ "M" ℄ HOLE	CHANNEL PLATES MK.	TYPE STEEL	PCS	SIZE	LENGTH	REINF. ANGLE (2 REQ'D) MK.	TYPE STEEL	SIZE	LGTH
									3	A242	.98	40'-11 1/4"	6 1/2 K @ 3'-4" = 21'-8"												
C32T25-L	6	A242	2"x1 1/2"x.25	35'-8"	7	A242	2"x1 1/2"x.25	26'-0"	3B	A242	.98	10'-7 [illegible]	1 3/4 K @ 3'-4" = 5'-9"	6	.98	35'-2 3/4"	[illegible]	A36	3	4 1/2x3/8	5 1/2"	RA-3	A242	2"x1 1/2"x.25	7 1/2"

COLUMN END

E1 END	TRUSS DESIGNATION	BEARING ANGLES MK.	TYPE STEEL	CHORD SIZE	PCS	LENGTH	[illegible]	[illegible] STRUT TYPE STEEL	DIA.	LENGTH	PCS	END STIFFENER TYPE STEEL	DIA.	LENGTH	TYPE STEEL	DIA.	LENGTH	TYPE STEEL	DIA.	LENGTH	MK.	TYPE STEEL	[illegible]	SIZE	LENGTH
	C32T25-L	6	A242	2"x1 1/2"x.25	2	10 1/2"	5'-4"	A242	.98	3'-6 3/4"	2	A242	.98	10 1/2"	A242	.98	[illegible]	—	—	—	CH2	A36	[illegible]	3"x.25"	4'-4"

CHECK DIMENSION FOR FAB LOCATION OF TRUSS

CL-1	CL-2	CL-3	CL-4	[illegible]
12'-10 1/2"	26'-2 1/2"	—	—	7'-4 1/2"

CORE END

EL END	TRUSS DESIGNATION	BEARING ANGLES MK.	TYPE STEEL	CHORD SIZE	LENGTH	WE	[illegible] STRUT MK.	TYPE STEEL	DIA.	LENGTH	VERTICAL "ST" STRUT MK.	TYPE STEEL	DIA.	LENGTH	TYPE STEEL	DIA.	LENGTH	TYPE STEEL	DIA.	LENGTH	TYPE STEEL	DIA.	LENGTH	MK.	TYPE STEEL	DIA.	LENGTH	DOUBLE STRUT MK.	TYPE STEEL	DIA.	LENGTH	PCS
	C32T25-L	9V	A242	2"x1 1/2"x.25	10"	2'-8 1/4"	10	A242	.98	3'-6 1/4"	5	A242	.98	2'-4 7/8"	A242	.98	4 3/8"	A242	.98	3/8"	—	—	—	—	—	—	—	DS3	A242	.75	2'-6 3/4"	2

STEEL TRUSS DETAIL
FOR
WORLD TRADE CENTER - N.Y.C.
FOR
THE PORT OF NEW YORK AUTHORITY

C32T25-L 35'-0" OVERALL (SEE NOTE NO 2)
TRADE CENTER TOWERS A-B

LACLEDE STEEL COMPANY

DESIGN DRAWING 7-ABI-23
DRAWN BY [illegible] DATE SEPT 23, [illegible]
DATE 11/18/68
APPROVED FOR FABRICATION BY FOR FABRICATOR | DATE
CHECKED BY: T.M.CHURA DATE SEPT 24, 1968
IN CHARGE OF PROD. DEV.
DETAILED BY A. CARL WEBER
FABRICATION CONT. NO. W.T.C. 221
SHEET NO. ST 225

ALL PANEL POINTS ... WELDED ...

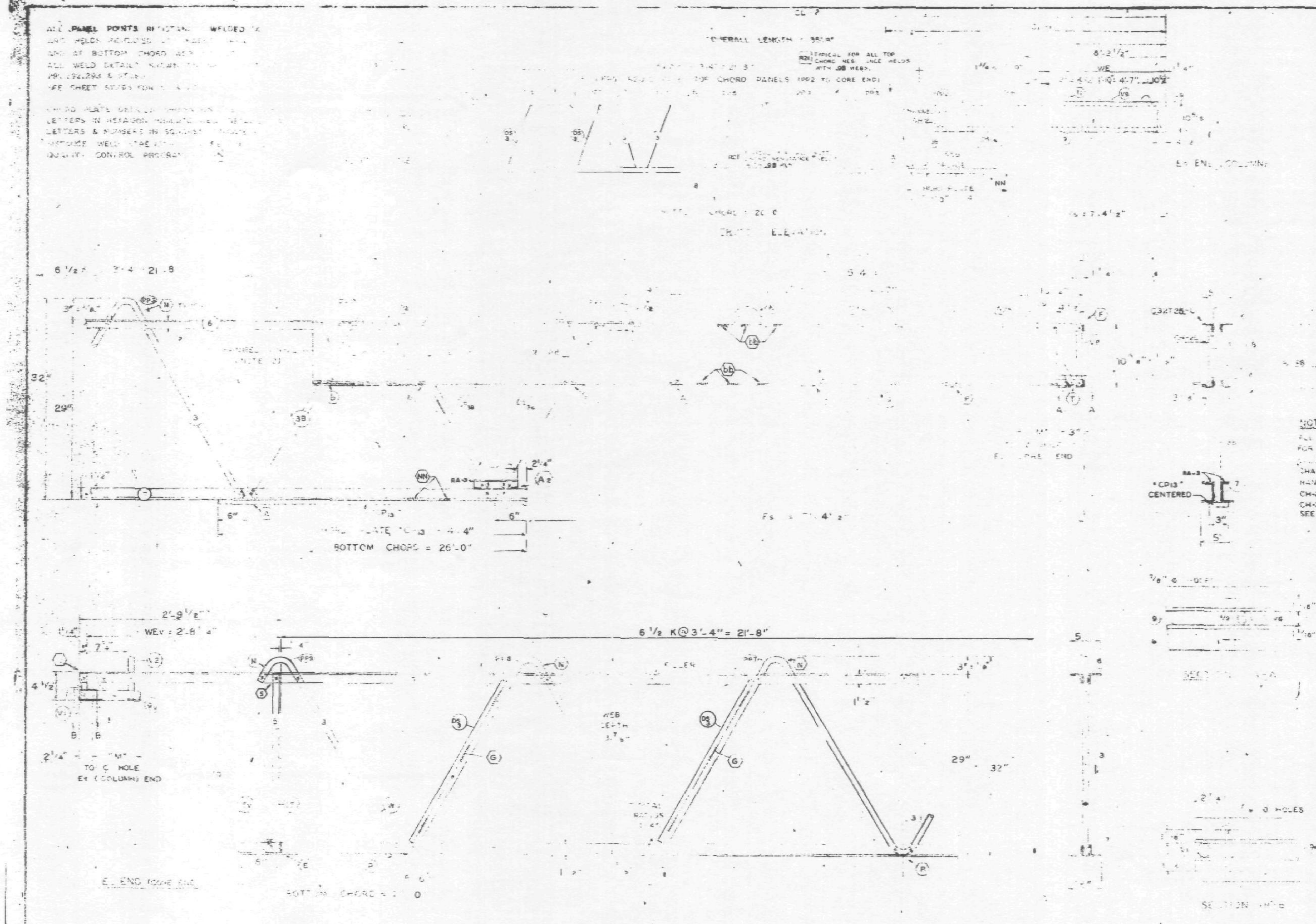

FABRICATION REQUIREMENTS	DESIGN	TOLERANCE
CAMBER AT MIDSPAN	1/2"	3/8"
DESIGN DEPTH	[illegible]	[illegible]
PANEL [illegible]	3'-4	[illegible]
OVERALL LENGTH	35'-8"	[illegible]
WEB DEPTH	31 7/8"	
CL DIMENSIONS	——	[illegible]

NOTE 2
ALL DETAILS & ELEVATIONS SHOWN FOR C32T25-L TRUSSES ARE APPLICABLE TO C32T25-R TRUSSES WITH CHANNEL & PLATE PLACED ON OPP. HAND
CH-2L TO BE USED WITH C32T25-L
CH-2R " " " " C32T25-R
SEE SHEET ST 407 FOR CHANNEL DETAILS.

REF. DRWG.	
7-AB1-23	8-13-68
7-AB1-52	2-15-68
7-AB1-53	7-22-68
7-AB1-54	8-15-68
7-AB4-53-56	8-15-68
SA-124	8-1-68

PAINT: LACLEDE ELECTROCOAT RED NO. 1000

REINF. ANGLE (2 REQ'D) MK.	TYPE STEEL	SIZE	LGTH.
RA-3	A242	2"x1"2"x.25	7½"

CHECK DIMENSION FOR FAB.

LOCATION OF TRANS. TRUSS CL-1	CL-2	CL-3	CL-4	Fs
12'-10½"	26'-2½"	—	—	7'-4½"

COLUMN END

TRUSS DESIGNATION																	CHANNEL MK	TYPE STEEL	CHANNEL SIZE	LENGTH	MK	TYPE STEEL	SIZE	LENGTH
C32T25-L	9	A242	[illegible] .25	2	[illegible]	5'-4¼"	DS 38	A242	.98	[illegible]	A242	98	10½"	A242	.98	[illegible]	CH2L / CH2R	A36 / A36	10 [2.80 / 10 [2.80	10'-0 / 10'-0"	CP 13	A36	3"x.25"	4'-4"

CORE END

EL END TRUSS DESIGNATION	BEARING ANGLES MK.	TYPE STEEL	CHORD SIZE	LENGTH	WE	DIAGONAL STRUT MK.	TYPE STEEL	DIA.	LENGTH	VERTICAL STRUT MK	TYPE STEEL	DIA.	LENGTH	END STIFFENER TYPE STEEL	DIA.	LENGTH	MK 72 TYPE STEEL	DIA.	LENGTH	MK 74 TYPE STEEL	DIA.	LENGTH	DOUBLE STRUT MK	TYPE STEEL	DIA.	LENGTH	DOUBLE STRUT MK	TYPE STEEL	DIA.	LENGTH	PCS
C32T25-L	9V	A242	2"x1½"x.25	10"	2'-8¼"	10	A242	.98	3'-6¾"	5	A242	98	2'-4⅞"	A242	98	4⅜"	A242	98	7⅜"	—	—	—	—	—	—	—	DS3	A242	.75	2'-6¾"	2

STEEL TRUSS DETAILS
FOR
WORLD TRADE CENTER - N.Y.C.
FOR
THE PORT OF NEW YORK AUTHORITY
FLOOR TRUSS C32T25-L 35'-8" OVERALL (SEE NOTE NO. 2)
WORLD TRADE CENTER TOWERS A-B

FABRICATION BY LACLEDE STEEL COMPANY
FABRICATED AT MADISON, ILLINOIS
DESIGN DRAWING NO. 7-AB1-23
APPROVED FOR FABRICATION James White FOR P.O.N.Y.A. DATE 10/29/68
DRAWN BY: [illegible] DATE SEPT. 23, 1968
APPROVED FOR FABRICATION BY: FOR FABRICATOR DATE
CHECKED BY: T.M.CHU DATE SEPT. 24, 1968
IN CHARGE OF PROD. DEV.
DETAILED BY A. CARL WEBER
FABRICATION CONT. NO. W.T.C. 221
SHEET NO. ST 225-L

ALL PANEL POINTS RESISTANCE WELDED (X).
ARC WELDS INDICATED AT SHADED AREAS AND AT BOTTOM CHORD WEB SPLICES.
ALL WELD DETAILS SHOWN ON SHEETS ST290, 291, 292, 293 & ST283.
SEE SHEET ST295 FOR V1 & V2

CHORD PLATE DETAILS SHOWN ON SHEET ST283.
LETTERS IN HEXAGON INDICATE WELD DETAIL, e.g. (B)
LETTERS & NUMBERS IN SQUARES INDICATE RESISTANCE WELD STRENGTH IDENTIFIED IN THE QUALITY CONTROL PROGRAM, e.g. R5

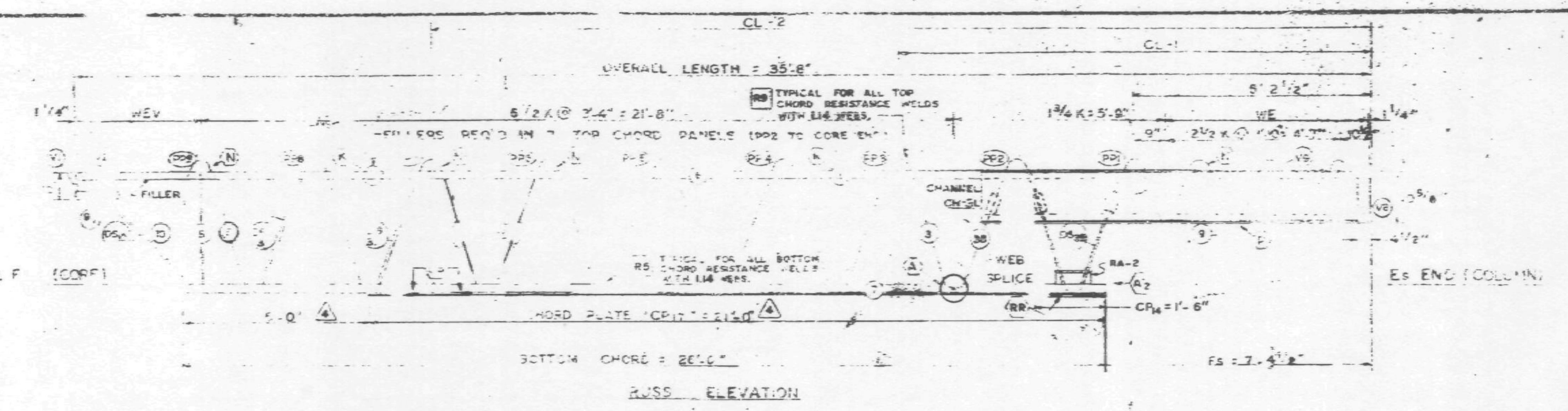

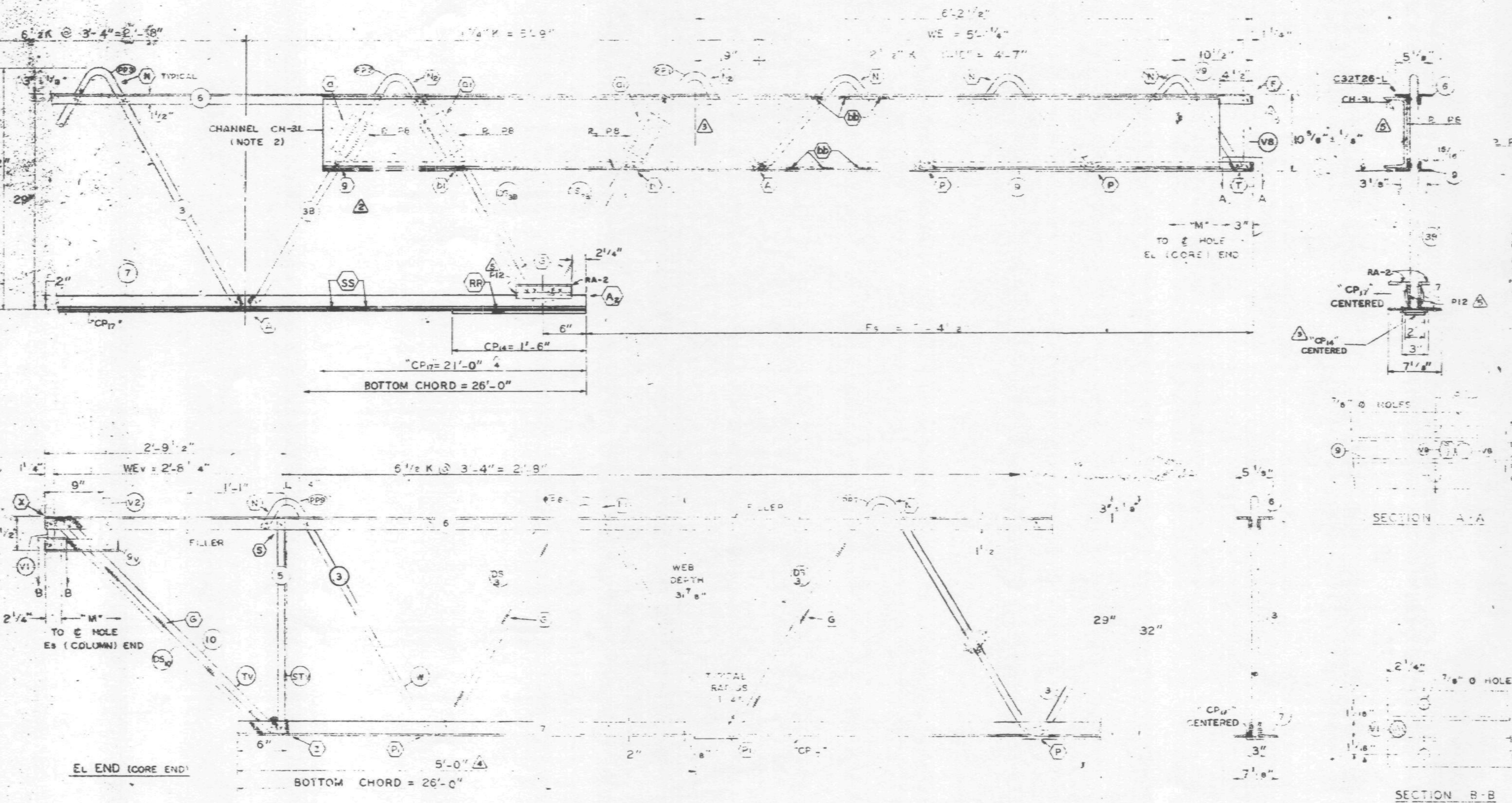

NOTE 2
ALL DETAILS & ELEVATIONS SHOWN FOR C32T26-L TRUSSES ARE APPLICABLE TO C32T26-R, C32T26LX & C32T2-RX TRUSSES, AS NOTED.
CHANNEL CH2L TO BE USED WITH C32T26LX
CH3L " " " " C32T26L
CH3R " " " " C32T26RX
SEE ST407 FOR CHANNEL DETAILS

PAINT: LACLEDE ELECTROCOAT RED NO. 10001

TRUSS DESIGNATION	TOP CHORD TWO ANGLES MK.	TYPE STEEL	CHORD SIZE	LENGTH	BOTTOM CHORD TWO ANGLES MK.	TYPE STEEL	CHORD SIZE	LENGTH	MAIN WEB "W" MK.	TYPE STEEL	DIA	LENGTH	NO. OF PANELS (SEE NOTE)	FILLER NO.	DIA	"M" ℄ HOLE	SPEC. PLATES (2 REQ'D) MK.	TYPE STEEL	SIZE	LGTH.	CHORD PLATE MK.	TYPE STEEL	SIZE	LENGTH	CHANNEL PLATES MK	TYPE STEEL	PCS.	SIZE	LENGTH	CHANNEL ANGLE MK	TYPE STEEL	SIZE	LENGTH	TRUSS DATA
C32T26-L	6	A242	2"x1 1/2"x.37	35'-8"	7	A36	3"x 2"x .33	26'-0"	3S	A242	1.14	10'-7 3/8"	13/4 K @ 3'-4" = 5'-9"	7	1.14	35'-2 3/4"	P12	A36	1"x3/8"	7 1/2"	CP17	A36	3"x1/4"	21'-0"	P8	A36	3	4 1/2x3/8	[illegible]					

COLUMN END

Es END TRUSS DESIGNATION	BEARING ANGLES MK.	TYPE STEEL	CHORD SIZE	PCS	LENGTH	WE	DOUBLE STRUT MK	TYPE STEEL	DIA	LENGTH	PCS	END STIFFENER MK V8 TYPE STEEL	DIA	LENGTH	MK V9 TYPE STEEL	DIA	LENGTH	TYPE STEEL	DIA	LENGTH	CHANNEL MK	TYPE STEEL	CHANNEL SIZE	NOTE NO. 2 LENGTH	CHORD PLATE MK	TYPE STEEL	SIZE	LENGTH
C32T26-L	8	A242	2x1 1/2x.25	2	10'-4 1/2"	5'-4 1/4	DS 3S	A242	1.14	2'-6 3/4"	2	A242	1.14	10 1/2"	A242	1.14	8'-3 7/8"				CH3L	A36	10 2.30	10'-0"	CP 14	A36	2x3/8"	1'-6"

CHECK DIMENSION FOR FAB. LOCATION OF TRANS. TRUSS

CL-1	CL-2	CL-3	CL-4	Fs
12'-10 1/2"	26'-2 1/2"	—	—	7'-4 1/2"

CORE END

EL END TRUSS DESIGNATION	BEARING ANGLES MK.	TYPE STEEL	CHORD SIZE	LENGTH	WEv	DIAGONAL "TV" STRUT MK.	TYPE STEEL	DIA	LENGTH	VERTICAL "ST" STRUT MK.	TYPE STEEL	DIA	LENGTH	END STIFFENER TYPE STEEL	DIA	LENGTH	MK. V2 TYPE STEEL	DIA	LENGTH	MK. V4 TYPE STEEL	DIA	LENGTH	DOUBLE STRUT MK	TYPE STEEL	DIA.	LENGTH	PCS	DOUBLE STRUT TYPE STEEL	DIA	LENGTH	MK.
C32T26-L	9V	A242	2"x1 1/2"x.25	10"	2'-8 1/4"	10	A242	1.14	3'-6 1/4"	5	A242	1.14	2'-4 7/8"	A242	1.14	4 3/8"	A242	1.14	7 5/8"	—	—	—	DS 2	A242	.92	2'-6 3/4"	2	A242	.92	3'-6 1/4"	DS 10

REINF ANGLES (2 REQ'D) MK.	TYPE STEEL	SIZE	LENGTH
RA 2	A36	3"x2"x.38"	7 1/2"

STEEL TRUSS DETAILS
FOR
WORLD TRADE CENTER - N.Y.C.
FOR
THE PORT OF NEW YORK AUTHORITY

FLOOR TRUSS C32T26-L 35'-8" OVERALL (SEE NOTE)
WORLD TRADE CENTER TOWERS A & B

FABRICATION BY: LACLEDE STEEL COMPANY
FABRICATED AT MADISON, ILLINOIS
APPROVED FOR FABRICATION BY: FOR P.O.N.Y.A.
APPROVED FOR FABRICATION BY: FOR FABRICATOR LACLEDE STEEL CO.
DETAILED BY: A. CARL WEBB

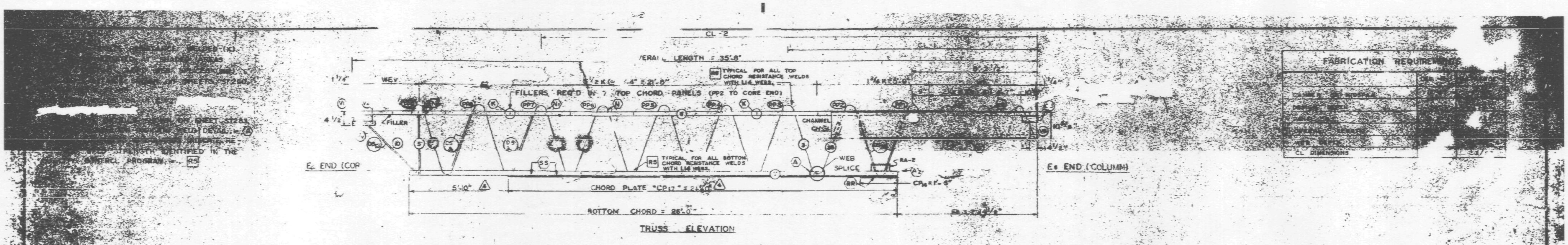

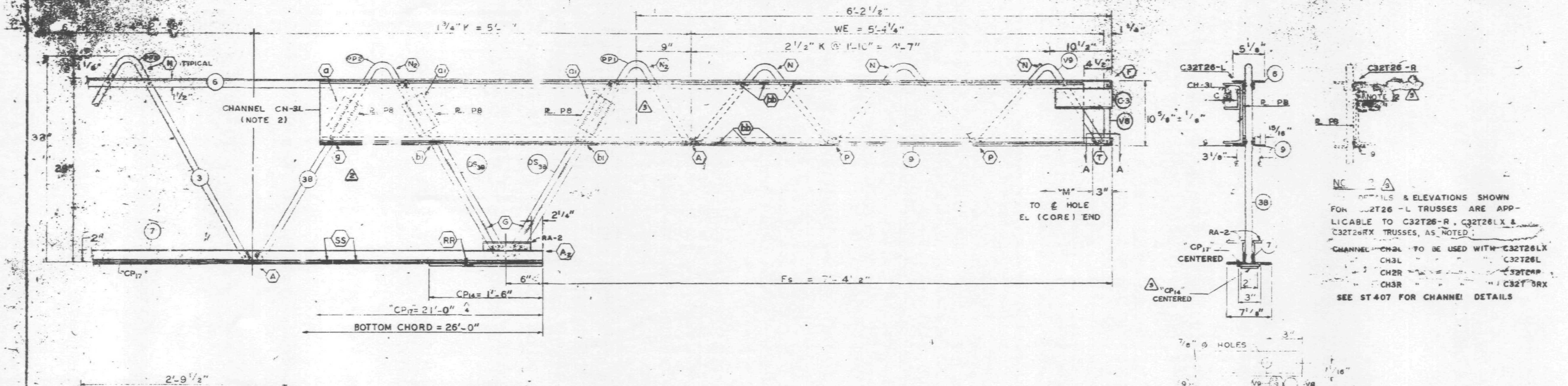

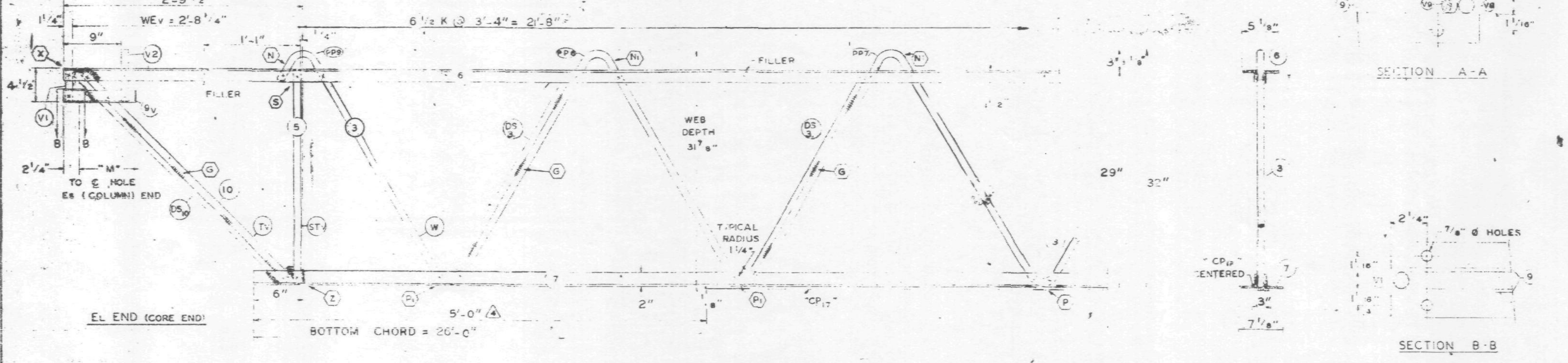

NO	DATE	REVISION	BY
4	12-4-68	AS NOTED	
3	11-14-68	AS NOTED	
2	11-7-68	AS NOTED	
1	10-31-68	AS NOTED	LWR

REF. DRWG.

7-ABI-23	10-4-68
7-ABI-52	2-15-68
7-ABI-53	7-22-68
7-ABI-54	11-25-68
7-AB4-53-56	10-4-68
SA-124	10-11-68

PAINT: LACLEDE ELECTROCOAT RED NO. 10001

TRUSS DESIGNATION	TOP CHORD TWO ANGLES MK.	TYPE STEEL	CHORD SIZE	LENGTH	BOTTOM CHORD TWO ANGLES MK.	TYPE STEEL	CHORD SIZE	LENGTH	MAIN WEB "W" MK.	TYPE STEEL	DIA.	LENGTH	NO. OF "K" SEE NOTE 1	FILLER NO.	DIA.	"M" C/C HOLE	CONNECTION FILLERS NO.	DIA.	LENGTH	CHORD PLATE MK.	TYPE STEEL	SIZE	LENGTH	CHANNEL PLATES MK	TYPE STEEL	PCS.	SIZE	LENGTH	CHANNEL / ANGLE MK	TYPE STEEL	SIZE	LENGTH	TRUSS DATA
									3	A242	1.14	40'-11 1/4"	6 1/2 K @ 3'-4" = 21'-8"																				
C32T26-L	6	A242	2"x1 1/2"x.37	35'-8"	7	A36	3"x2"x.33	26'-0"	38	A242	1.14	10'-7 5/8"	1 3/4 K @ 3'-4" = 5'-9"	7	1.14	35'-2 3/4"				CP17	A36	3"x1/4"	21'-0"	P8	A36	3	4 1/2x3/8	5 1/2"	C-3	A36	3"x2"x1/4"	9"	

COLUMN END

Es END TRUSS DESIGNATION	BEARING ANGLES MK.	TYPE STEEL	CHORD SIZE	PCS	LENGTH	WE	DOUBLE STRUT MK.	TYPE STEEL	DIA.	LENGTH	PCS	END STIFFENER MK. V8 TYPE STEEL	DIA.	LENGTH	MK. V9 TYPE STEEL	DIA.	LENGTH	MK. V10 TYPE STEEL	DIA.	LENGTH	CHANNEL MK.	TYPE STEEL	CHANNEL SIZE	NOTE NO. 2 LENGTH	CHORD PLATE MK.	TYPE STEEL	SIZE	LENGTH
C32T26-L	9	A242	2x1 1/2x.25	2	10'-4 1/2"	5'-4 1/4"	DS 38	A242	1.14	2'-6 3/4"	2	A242	1.14	10 1/2"	A242	1.14	8'-3 7/8"				CH3L	A36	10 230	10'-0"	CP 14	A36	2"x3/8"	1'-6"

CHECK DIMENSION FOR FAB. LOCATION OF TRANS. TRUSS

CL-1	CL-2	CL-3	CL-4	Fs
12'-10 1/2"	26'-2 1/2"	—	—	7'-4 1/2"

CORE END

EL END TRUSS DESIGNATION	BEARING ANGLES MK.	TYPE STEEL	CHORD SIZE	LENGTH	WE	DIAGONAL STRUT MK.	TYPE STEEL	DIA.	LENGTH	VERTICAL "ST" STRUT MK.	TYPE STEEL	DIA.	LENGTH	END STIFFENER TYPE STEEL	DIA.	LENGTH	TYPE STEEL	DIA.	LENGTH	MK. 74 TYPE STEEL	DIA.	LENGTH	DOUBLE STRUT MK.	TYPE STEEL	DIA.	LENGTH	PCS.	DOUBLE STRUT TYPE STEEL	DIA.	LENGTH	MK.
C32T26-L	9V	A242	2"x1 1/2"x.25	10"	2'-8 1/4"	10	A242	1.14	3'-6 1/4"	5	A242	1.14	2'-4 7/8"	A242	1.14	4'-9"	A242	1.14	7 3/8"	—	—	—	DS 3	A242	.92	2'-0 3/4"	2	A242	.92	3'-6 1/4"	DS 10

REINF ANGLES (2 REQ'D)

MK.	TYPE STEEL	SIZE	LENGTH
RA2	A36	3"x2"x.33"	7 1/2"

STEEL TRUSS DETAILS
FOR
WORLD TRADE CENTER - N.Y.C.
FOR
THE PORT OF NEW YORK AUTHORITY

FLOOR TRUSS C32T26-L 35'-8" OVERALL (SEE NOTE NO. 2)
WORLD TRADE CENTER TOWERS A-B

FABRICATION BY: LACLEDE STEEL COMPANY
FABRICATED AT MADISON, ILLINOIS
DESIGN DRAWING NO. 7-ABI-23
PLATE
APPROVED FOR FABRICATION FOR P.O.N.Y.A. DATE 12/11/68
DRAWN BY: [illegible] DATE SEPT. 23, 1968
APPROVED FOR FABRICATION BY: FOR FABRICATOR DATE
CHECKED BY: T.M. CHURA DATE SEPT. 24, 1968
IN CHARGE OF: PROJ. DEV.
FABRICATION CONT. NO. 221
... BY: J. CARL WEBER
SHEET NO. ST 226-L

ALL PANEL POINTS RESISTANCE WELDED (X).
ARC WELDS INDICATED AT SHADED AREAS AND AT BOTTOM CHORD WEB SPLICES.
ALL WELD DETAILS SHOWN ON SHEETS ST290, 291, 292, 293 & ST283.
SEE SHEET ST296 FOR V1 & V2

CHORD PLATE DETAILS SHOWN ON SHEET ST283.
LETTERS IN HEXAGON INDICATE WELD DETAIL, ie., (A)
LETTERS & NUMBERS IN SQUARES INDICATE RESISTANCE WELD STRENGTH IDENTIFIED IN THE QUALITY CONTROL PROGRAM, ie., [R5]

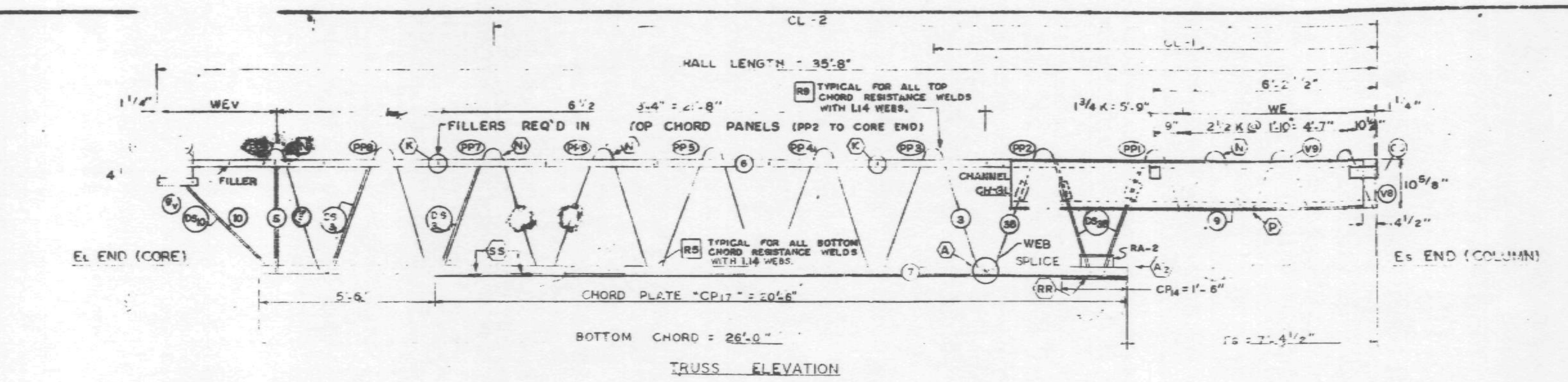

TRUSS ELEVATION

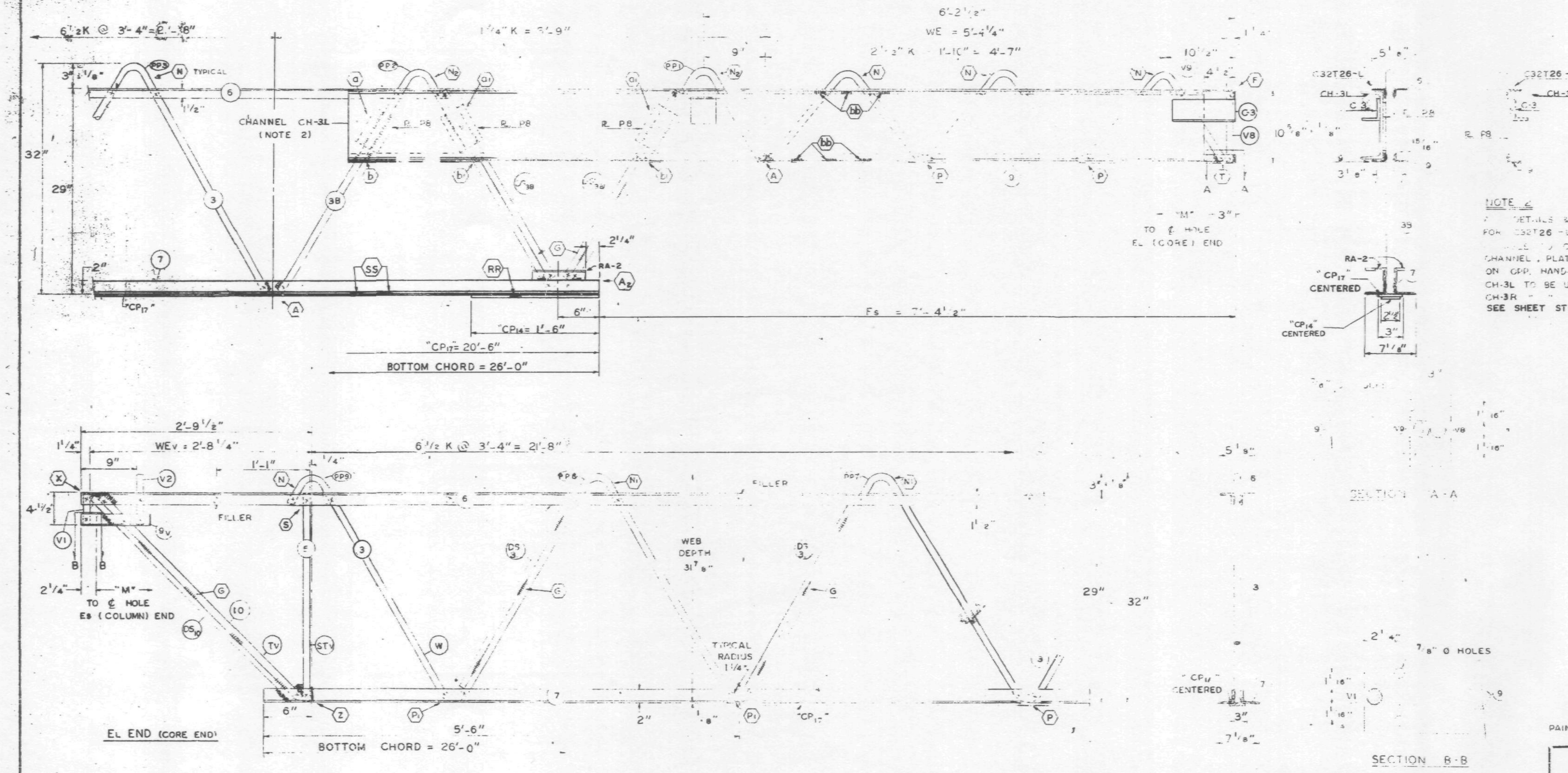

SECTION A-A

SECTION B-B

FABRICATION REQUIREMENTS	DESIGN	TOLERANCE
CAMBER AT MIDSPAN	7/8"	3/8"
DESIGN DEPTH	29"	[illegible]
PANEL "K"	3'-4"	±1/4"
OVERALL LENGTH	35'-8"	3/8"
WEB DEPTH	31 7/8"	±1/8"
CL DIMENSIONS	—	±1/8"

NOTE 2

DETAILS & ELEVATIONS SHOWN FOR C32T26-L TRUSSES ARE APPLICABLE TO C32T26-R TRUSSES WITH CHANNEL, PLATE & ANGLE C-3 PLACED ON OPP. HAND.
CH-3L TO BE USED WITH C32T26-L
CH-3R " " " " C32T26-R
SEE SHEET ST407 FOR CHANNEL DETAILS.

NO	DATE	REVISION	BY
1	10-31-68	AS NOTED	L.W.H.

REF. DRWG.

7-ABI-23	8-13-68
7-ABI-52	2-15-68
7-ABI-53	7-22-68
7-ABI-54	8-15-68
7-AB4-53-56	8-15-68
SA-124	8-1-68

PAINT: LACLEDE ELECTROCOAT RED NO. 10001

TRUSS DESIGNATION	TOP CHORD TWO ANGLES MK.	TYPE STEEL	CHORD SIZE	LENGTH	BOTTOM CHORD TWO ANGLES MK.	TYPE STEEL	CHORD SIZE	LENGTH	MAIN WEB "W" MK.	TYPE STEEL	DIA.	LENGTH	NO. OF "K" SEE NOTE 1	FILLER NO.	DIA.	"M" C/C HOLE	CONNECTION FILLERS NO.	DIA.	LENGTH	CHORD PLATE MK.	TYPE STEEL	SIZE	LENGTH	CHANNEL PLATES MK.	TYPE STEEL	PCS.	SIZE	LENGTH	CHANNEL ANGLE MK.	TYPE STEEL	SIZE	LENGTH	TRUSS DATA
C32T26-L	6	A242	2"x1 1/2"x.37	35'-8"	7	A36	3"x2"x.33	26'-0"	3	A242	1.14	40'-11 1/4"	6 1/2 K @ 3'-4" = 21'-8"	7	1.14	35'-2 3/4"				CP17	A36	3"x1/4"	20'-6"	P8	A36	3	4 1/2x3/8	5 1/2"	C-3	A36	3"x2"x1/2"	3 1/2"	
									3B	A242	1.14	10'-7 5/8"	1 3/4 K @ 3'-4" = 5'-9"																				

COLUMN END

Es END	TRUSS DESIGNATION	BEARING ANGLES MK.	TYPE STEEL	CHORD SIZE	PCS	LENGTH	WE	DOUBLE STRUT MK.	TYPE STEEL	DIA.	LENGTH	PCS.	END STIFFENER MK. V8 TYPE STEEL	DIA	LENGTH	MK. V9 TYPE STEEL	DIA.	LENGTH	MK. V10 TYPE STEEL	DIA.	LENGTH	CHANNEL MK.	TYPE STEEL	CHANNEL SIZE	NOTE NO. 2 LENGTH	CHORD PLATE MK.	TYPE STEEL	SIZE	LENGTH
	C32T26-L	9	A242	2x1 1/2x.25	2	10'-4 1/2"	5'-4 1/4"	DS 3B	A242	1.14	2'-6 3/4"	2	A242	1.14	10 1/2"	A242	1.14	8'-3 7/8"				CH3L	A36	10 2 30	10'-0"	CP 14	A36	2 1/2x1/4	1'-6"
																						CH3R	A36	10 2 30	10'-0"				

CHECK DIMENSION FOR FAB. LOCATION OF TRANS. TRUSS

CL-1	CL-2	CL-3	CL-4	Fs
12'-10 1/2"	26'-2 1/2"	—	—	7'-4 1/2"

CORE END

EL END	TRUSS DESIGNATION	BEARING ANGLES MK.	TYPE STEEL	CHORD SIZE	LENGTH	WEv	DIAGONAL "Tv" STRUT MK.	TYPE STEEL	DIA.	LENGTH	VERTICAL "STv" STRUT MK.	TYPE STEEL	DIA.	LENGTH	END STIFFENER MK. V1 TYPE STEEL	DIA	LENGTH	MK. V2 STEEL	DIA.	LENGTH	MK. V4 TYPE STEEL	DIA.	LENGTH	DOUBLE STRUT MK.	TYPE STEEL	DIA.	LENGTH	PCS.	DOUBLE STRUT TYPE STEEL	DIA.	LENGTH	MK.
	C32T26-L	9v	A242	2"x1 1/2"x.25	10"	2'-8 1/4"	10	A242	1.14	3'-6 1/4"	5	A242	1.14	2'-4 7/8"	A242	1.14	4 3/8"	A242	1.14	7 3/8"	—	—	—	DS 3	A242	.92	2'-6 3/4"	2	A242	.92	3'-6 1/4"	DS 10

REINF ANGLES (2 REQ'D)

MK.	TYPE STEEL	SIZE	LENGTH
RA-2	A36	[illegible]	7 1/2"

STEEL TRUSS DETAILS
FOR
WORLD TRADE CENTER - N.Y.C.
FOR
THE PORT OF NEW YORK AUTHORITY

FLOOR TRUSS C32T26-L 35'-8" OVERALL (SEE NOTE NO.2)
WORLD TRADE CENTER TOWERS A-B

FABRICATION BY LACLEDE STEEL COMPANY

FABRICATED AT MADISON, ILLINOIS		DESIGN DRAWING NO. 7-ABI-23	PLATE
APPROVED FOR FABRICATION BY [illegible] FOR P.O.N.Y.A.	DATE 11/7/68	DRAWN BY: [illegible] DATE SEPT. 23, 1968	
APPROVED FOR FABRICATION BY: FOR FABRICATOR	DATE	CHECKED BY: T.M.CHURA DATE SEPT. 24, 1968	IN CHARGE OF PROD. DEV.
DETAILED BY: A. CARL WEBER		FABRICATION CONT. NO. W.T.C. 221	SHEET NO. ST 226-L

[illegible] POINTS RESISTANCE WELDED (X).
[illegible] INDICATED AT SHADED AREAS
[illegible] CHORD WEB SPLICES ([illegible]).
[illegible] DETAILS SHOWN ON SHEETS ST290.
[illegible] & ST283.
[illegible] STEEL FOR V1 & V2
[illegible] DETAILS SHOWN ON SHEET ST283
LETTERS IN HEXAGON INDICATE WELD DETAIL, i.e. (A)
LETTERS & NUMBERS IN SQUARES INDICATE RESISTANCE WELD STRENGTH IDENTIFIED IN THE QUALITY CONTROL PROGRAM, i.e. [R5]

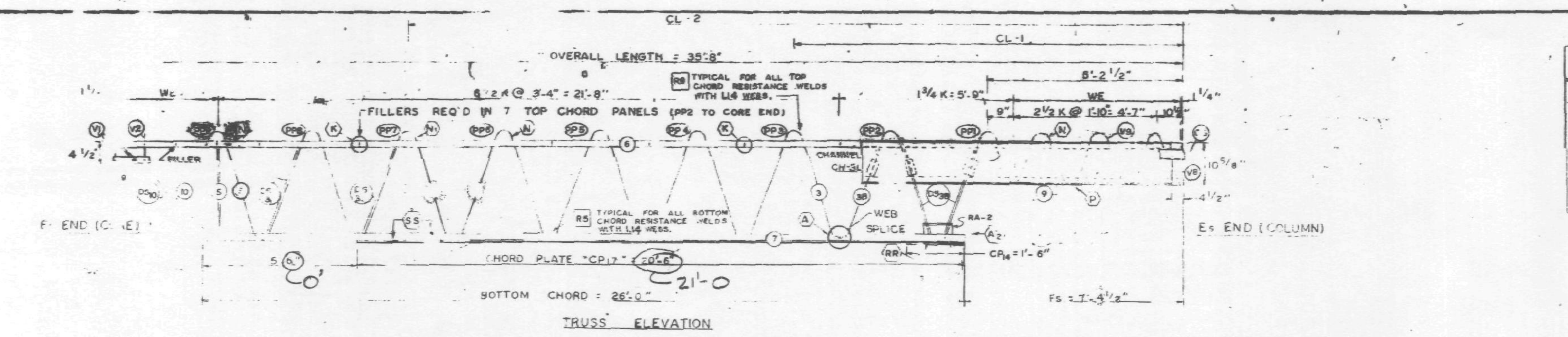

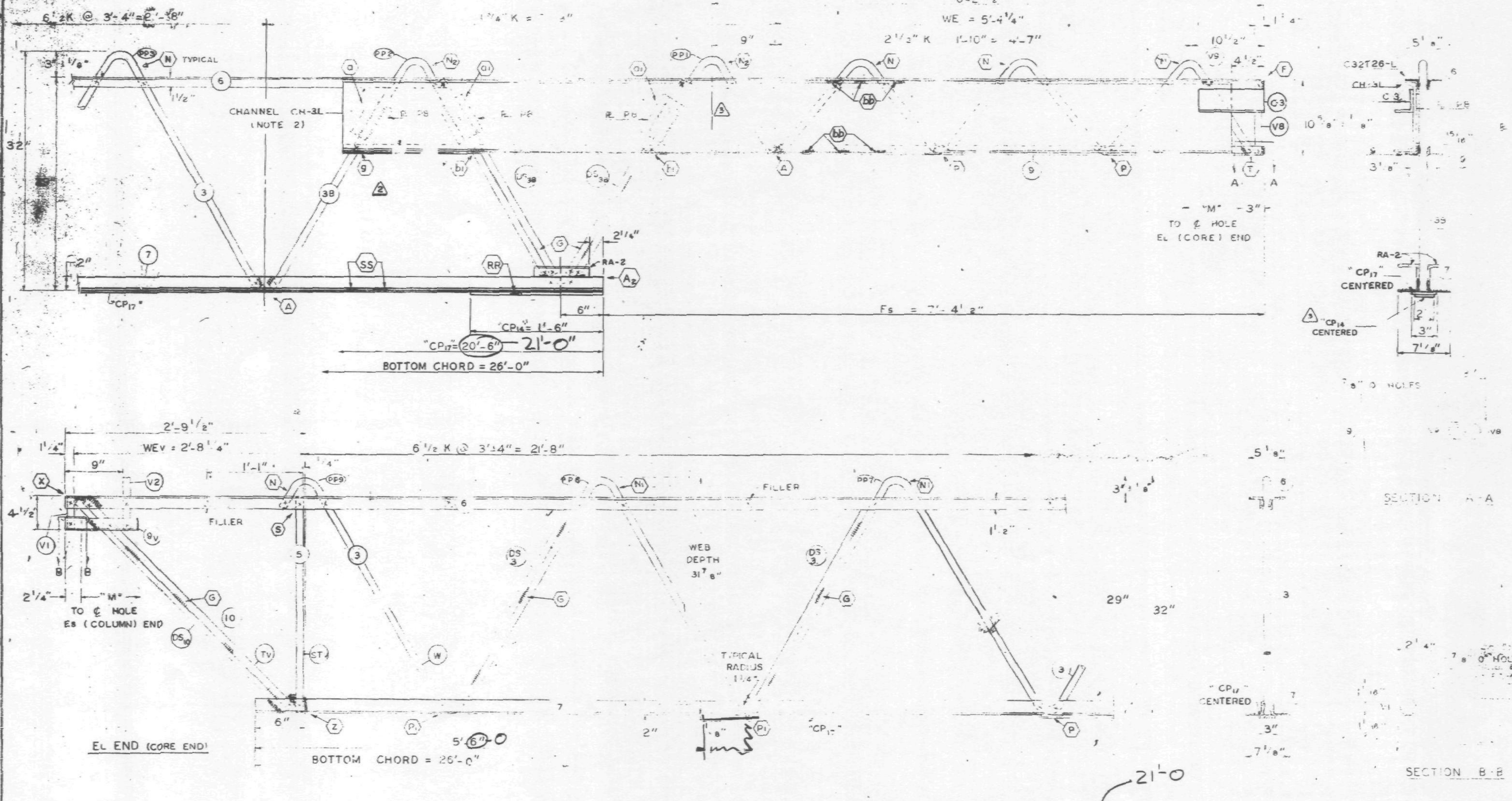

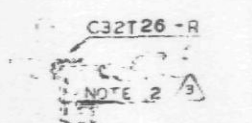

NOTE 2 (3)
ALL DETAILS & ELEVATIONS SHOWN FOR C32T26-L TRUSSES ARE APPLICABLE TO C32T26-R, C32T26LX & C32T26RX TRUSSES, AS NOTED:

CHANNEL	CH2L	TO BE USED WITH	C32T26LX
"	CH3L	"	C32T26L
"	CH2R	"	C32T26R
"	CH3R	"	C32T26RX

SEE ST 407 FOR CHANNEL DETAILS

FABRICATION REQUIREMENTS	DESIGN	
CAMBER AT MIDSPAN	[illegible]	
DESIGN DEPTH	[illegible]	
PANEL "K"		±1/4"
OVERALL LENGTH	35'-8"	±3/8"
WEB DEPTH	31 7/8"	1/4"
CL DIMENSIONS	———	±3/8"

NO	DATE	REVISION	BY
3	11-14-68	AS NOTED	LWH
2	11-7-68	AS NOTED	[illegible]
1	10-31-68	AS NOTED	LWH

(2) REF DRWG.

7-ABI-23	10-4-68
7-ABI-52	2-15-68
7-ABI-53	7-22-68
7-ABI-54	10-4-68
7-AB4-53-56	10-4-68
SA-124	10-11-68

CHRISTIANSEN [illegible] SON
Structural & Civil Engineers
Date 2/3/68 SK

PAINT: LACLEDE ELECTROCOAT
REC. NO 10001

TRUSS DESIGNATION	TOP CHORD TWO ANGLES MK.	TYPE STEEL	CHORD SIZE	LENGTH	BOTTOM CHORD TWO ANGLES MK	TYPE STEEL	CHORD SIZE	LENGTH	MAIN WEB "W" MK.	TYPE STEEL	DIA.	LENGTH	NO. OF "K" SEE NOTE 1	FILLER NO.	DIA.	"M" C/C HOLE	CONNECTION FILLERS NO.	DIA.	LENGTH	CHORD PLATE MK.	TYPE STEEL	SIZE	LENGTH	CHANNEL PLATES MK	TYPE STEEL	PCS.	SIZE	LENGTH	CHANNEL ANGLE MK	TYPE STEEL	SIZE	LENGTH	TRUSS DATA	
C32T26-L	6	A242	2"x1 1/2"x.37	35'-8"	7	A36	3"x2"x.33	26'-0"	3	A242	1.14	40'-11 1/4"	6 1/2 K @ 3'-4" = 21'-8"	7	1.14	35'-2 3/4"				CP17	A36	3"x1/4"	20'-6" (21'-0)	P8	A36	3	4 1/2x.39	5 1/2"	C-3	A36	3"x2"x1/4"	9"		
									38	A242	1.14	10'-7 5/8"	1 3/4 K @ 3'-4" = 5'-9"																					

COLUMN END

Es END	TRUSS DESIGNATION	BEARING ANGLES MK.	TYPE STEEL	CHORD SIZE	PCS	LENGTH	WE	DOUBLE STRUT MK.	TYPE STEEL	DIA	LENGTH	PCS	END STIFFENER MK. V8 TYPE STEEL	DIA	LENGTH	MK. V9 TYPE STEEL	DIA	LENGTH	MK. V10 TYPE	DIA.	LENGTH	(3) CHANNEL NOTE NO. 2 MK.	TYPE STEEL	CHANNEL SIZE	LENGTH	CHORD PLATE (3) MK.	TYPE STEEL	SIZE	LENGTH
	C32T26-L	9	A242	2x1 1/2x.25	2	10'-4 1/2"	5'-4 1/4"	DS 38	A242	1.14	2'-6 3/4"	2	A242	1.14	10 1/2"	A242	1.14	8'-3 7/8"				CH3L (1)	A36	10 230	10'-0"	CP 14	A36	2"x3/8"	1'-6"

CHECK DIMENSION FOR FAB.

LOCATION OF TRANS. TRUSS				
CL-1	CL-2	CL-3	CL-4	Fs
12'-10 1/2"	26'-2 1/2"	———	———	7'-4 1/2"

CORE END

EL END	TRUSS DESIGNATION	BEARING ANGLES MK.	TYPE STEEL	CHORD SIZE	LENGTH	WEv	DIAGONAL "Tv" STRUT MK	TYPE STEEL	DIA	LENGTH	VERTICAL "STv" STRUT MK.	TYPE STEEL	DIA	LENGTH	END STIFFENER MK. V1 TYPE STEEL	DIA	LENGTH	MK. V2 TYPE STEEL	DIA.	LENGTH	MK. V4 TYPE STEEL	DIA.	LENGTH	DOUBLE STRUT MK.	TYPE STEEL	DIA.	LENGTH	PCS.	DOUBLE STRUT TYPE STEEL	DIA	LENGTH	MK.
	C32T26-L	9V	A242	2"x1 1/2"x.25	10"	2'-8 1/4"	10	A242	1.14	3'-6 1/4"	5	A242	1.14	2'-4 7/8"	A242	1.14	4 3/8"	A242	1.14	7 3/8"	—	—	—	DS 3	A242	.92	2'-6 3/4"	2	A242	.92	3'-6 1/4"	DS 10

REINF ANGLES (2 REQ'D) MK	TYPE STEEL	SIZE	LENGTH
RA2	A36	3 1/2x2 1/2x.33	7 1/2"

STEEL TRUSS DETAILS
FOR
WORLD TRADE CENTER - N.Y.C.
FOR
THE PORT OF NEW YORK AUTHORITY

FLOOR TRUSS C32T26-L 35'-8" OVERALL (SEE NOTE NO. 2)
WORLD TRADE CENTER TOWERS A-B

FABRICATION BY LACLEDE STEEL COMPANY

FABRICATED AT MADISON, ILLINOIS	DESIGN DRAWING NO. 7-ABI-23	PLATE
APPROVED FOR FABRICATION BY ____ FOR P.O.N.Y.A. DATE ____	DRAWN BY [illegible] DATE SEPT. 23, 1968	
APPROVED FOR FABRICATION BY ____ FOR FABRICATOR DATE ____	CHECKED BY: T.N. CHURA DATE SEPT. 24, 1968	IN CHARGE OF PROD. DEV.
DETAILED BY A. CARL WEBER	FABRICATION CONT. NO. W.T.C. 221	SHEET NO. ST 226

ALL [illegible] RESISTANCE WELDED (X).
ARC [illegible] AT SHADED AREAS
ARC [illegible] CHORD WEB SPLICES ([illegible]).
ALL WELD DETAILS SHOWN ON SHEETS ST290, 291, 292, 293 & ST283.
SEE SHEET ST295 FOR V1 & V2

CHORD PLATE DETAILS SHOWN ON SHEET ST283.
LETTERS IN HEXAGON INDICATE WELD [illegible], ie. (A)
LETTERS & NUMBERS IN SQUARES INDICATE RESISTANCE WELD STRENGTH IDENTIFIED IN THE QUALITY CONTROL PROGRAM, ie. RS

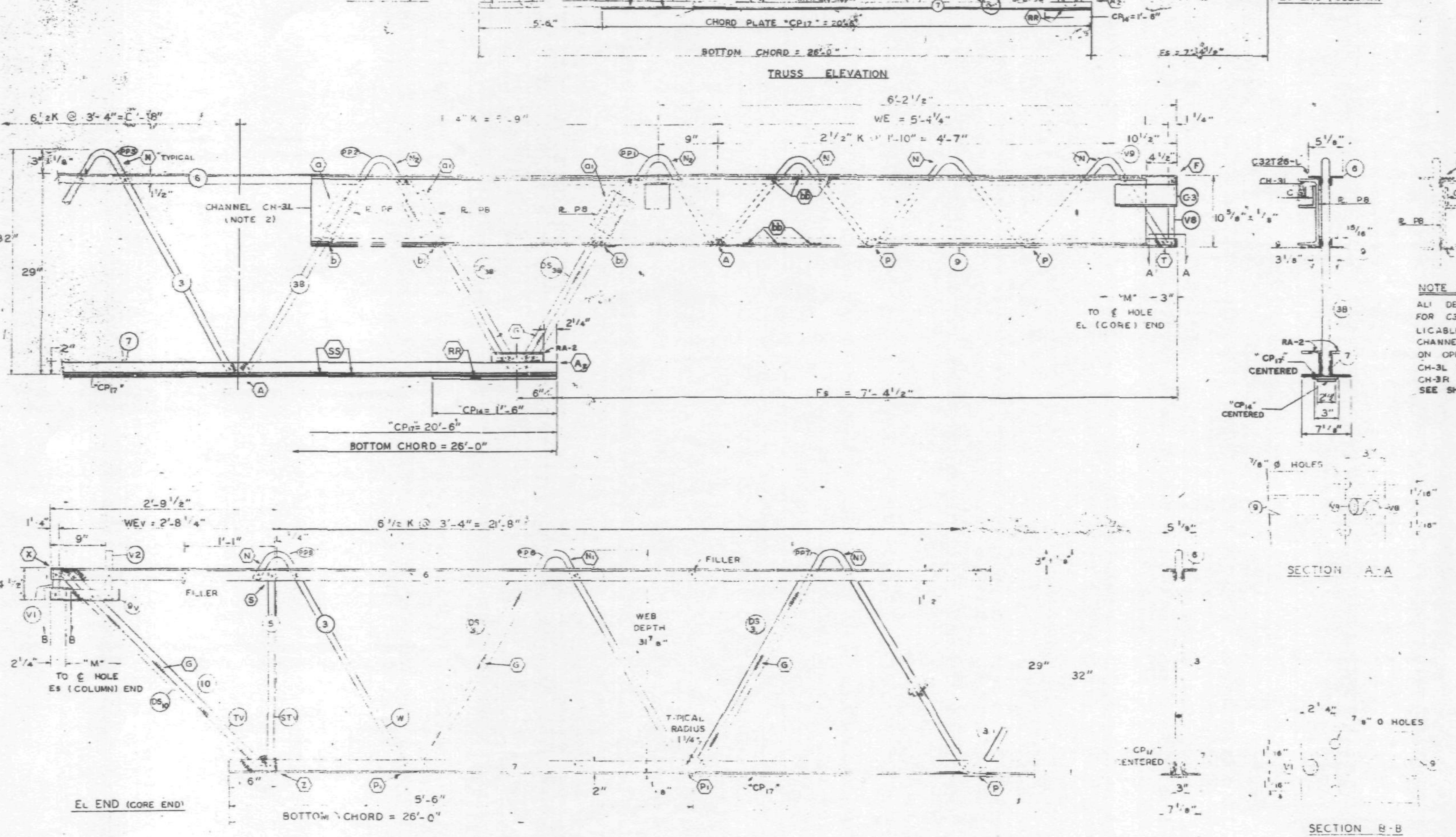

FABRICATION REQUIREMENTS

	DESIGN	TOLERANCE
CAMBER AT MIDSPAN	7/8"	3/8"
DESIGN DEPTH	29"	± 1/4"
PANEL "K"	3'-4"	± 1/4"
OVERALL LENGTH	35'-8"	± 3/8"
WEB DEPTH	31 7/8"	± 1/4"
CL DIMENSIONS	———	± 3/8"

NOTE 2

ALL DETAILS & ELEVATIONS SHOWN FOR C32T26-L TRUSSES ARE APPLICABLE TO C32T26-R TRUSSES WITH CHANNEL, PLATE & ANGLE C-3 PLACED ON OPP. HAND.
CH-3L TO BE USED WITH C32T26-L
CH-3R " " " " C32T26-R
SEE SHEET ST407 FOR CHANNEL DETAILS.

REF. DRWG.	
7-ABI-23	8-13-68
7-ABI-52	2-15-68
7-ABI-53	7-22-68
7-ABI-54	8-15-68
7-ABI-53-56	8-15-68
SA-124	8-1-68

[illegible] CHRISTIANSEN-ROBERTSON Structural & Civil Engineers — X — 10/29/68 SK

PAINT: LACLEDE ELECTROCOAT RED NO. 10001

TRUSS DESIGNATION	TOP CHORD TWO ANGLES MK.	TYPE STEEL	CHORD SIZE	LENGTH	BOTTOM CHORD TWO ANGLES MK.	TYPE STEEL	CHORD SIZE	LENGTH	MAIN WEB "W" MK.	TYPE STEEL	DIA.	LENGTH	NO. OF "K" SEE NOTE 1	FILLER NO.	DIA.	"M" C/C HOLE	CONNECTION FILLERS NO.	DIA.	LENGTH	CHORD PLATE MK.	TYPE STEEL	SIZE	LENGTH	CHANNEL PLATES MK.	TYPE STEEL	PCS.	SIZE	LENGTH	CHANNEL ANGLE MK.	TYPE STEEL	SIZE	LENGTH	TRUSS DATA
									3	A242	1.14	40'-11 1/4"	6 1/2 K @ 3'-4" = 21'-8"																				–
C32T26-L	6	A242	2" x 1 1/2" x .37	35'-8"	7	A36	3" x 2" x .33	26'-0"	3B	A242	1.14	10'-7 7/8"	1 3/4 K @ 3'-4" = 5'-9"	7	1.14	35'-2 3/4"				CP17	A36	3" x 1/4"	20'-6"	P8	A36	3	4 1/2" x 3/8"	[illegible]	C-3	A36	3" x 2" x [illegible]	[illegible]	

COLUMN END

Es END	TRUSS DESIGNATION	BEARING ANGLES MK.	TYPE STEEL	CHORD SIZE	PCS	LENGTH	WE	DOUBLE STRUT MK.	TYPE STEEL	DIA.	LENGTH	PCS	END STIFFENER MK. V8 TYPE STEEL	DIA.	LENGTH	MK. V9 TYPE STEEL	DIA.	LENGTH	MK. V10 TYPE STEEL	DIA.	LENGTH	CHANNEL MK.	TYPE STEEL	CHANNEL SIZE	NOTE NO. 2 LENGTH	CHORD PLATE MK.	TYPE STEEL	SIZE	LENGTH
1	C32T26-L	9	A242	2 x 1 1/2 x .25	2	10'-4 1/2"	5'-4 1/4"	DS 3B	A242	1.14	2'-6 3/4"	2	A242	1.14	10 1/2"	A242	1.14	8'-3 7/8"				CH3L / CH3R	A36 / A36	10 230 / 10 230	10'-0" / 10'-0"	CP 16	A36	2 x 1/4"	1'-6"

R

CHECK DIMENSION FOR FAB. LOCATION OF TRANS. TRUSS CL-1	CL-2	CL-3	CL-4	Fs
12'-10 1/2"	26'-2 1/2"	———	———	7'-4 1/2"

CORE END

EL END	TRUSS DESIGNATION	BEARING ANGLES MK.	TYPE STEEL	CHORD SIZE	LENGTH	WEV	DIAGONAL "TV" STRUT MK.	TYPE STEEL	DIA.	LENGTH	VERTICAL "STV" STRUT MK.	TYPE STEEL	DIA.	LENGTH	END STIFFENER MK. V1 TYPE STEEL	DIA.	LENGTH	MK. V2 TYPE STEEL	DIA.	LENGTH	MK. V4 TYPE STEEL	DIA.	LENGTH	DOUBLE STRUT MK.	TYPE STEEL	DIA.	LENGTH	PCS.	DOUBLE STRUT TYPE STEEL	DIA.	LENGTH	MK.
	C32T26-L	9V	A242	2" x 1 1/2" x .25	10"	2'-8 1/4"	10	A242	1.14	3'-6 1/4"	5	A242	1.14	2'-4 7/8"	A242	1.14	4 3/8"	A242	1.14	7 3/8"	—	—	—	DS 5	A242	.92	2'-6 3/4"	2	A242	.92	3'-6 1/4"	DS 10

REINF ANGLES (2 REQ'D) MK.	TYPE STEEL	SIZE	LENGTH
RA-2	A36	[illegible]	7 1/2"

STEEL TRUSS DETAILS
FOR
WORLD TRADE CENTER - N.Y.C.
FOR
THE PORT OF NEW YORK AUTHORITY

FLOOR TRUSS C32T26-L 35'-8" OVERALL (SEE NOTE NO. 2)
WORLD TRADE CENTER TOWERS A-B

FABRICATION BY LACLEDE STEEL COMPANY
FABRICATED AT MADISON, ILLINOIS
DESIGN DRAWING NO. 7-ABI-23
APPROVED FOR FABRICATION BY: ______ FOR P.O.N.Y.A. DATE ______
DRAWN BY [illegible] DATE SEPT. 23, 1968
APPROVED FOR FABRICATION BY: ______ FOR FABRICATOR DATE ______
CHECKED BY: T.M. CHURA DATE SEPT. 24, 1968
IN CHARGE OF PROD. DEV.
DETAILED BY: A. CARL WEBER
FABRICATION CONT. NO. W.T.C. 221
SHEET NO. ST 226-L

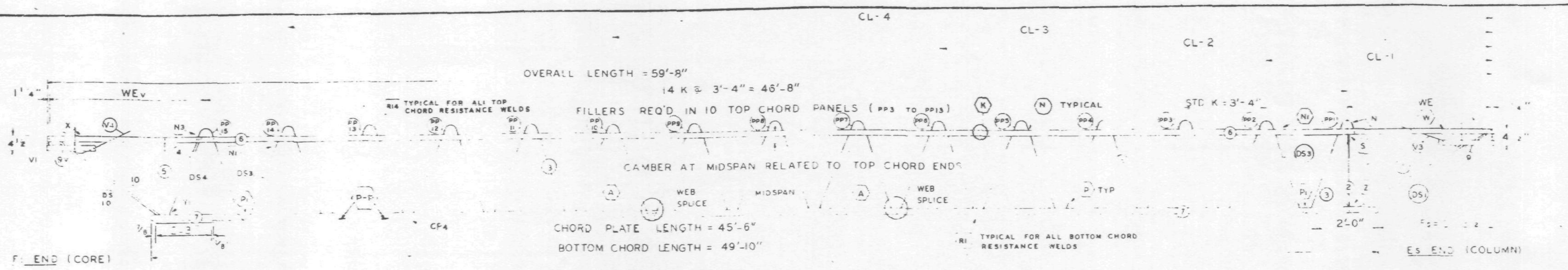

EL END (CORE)

Es END (COLUMN)

TRUSS ELEVATION

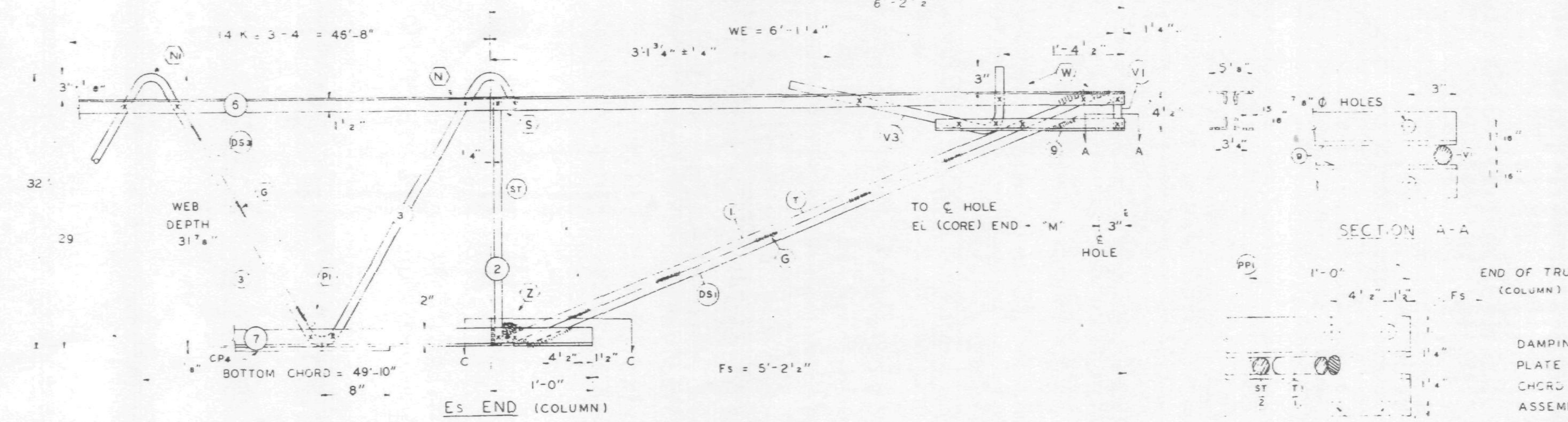

Es END (COLUMN)

SECTION A-A

SECTION C-C

ALL PANEL POINTS RESISTANCE WELDED (X)
ARC WELDS INDICATED AT SHADED AREAS AND AT BOTTOM CHORD WEB SPLICES
ALL WELD DETAILS SHOWN ON SHEETS ST290 – ST294 AND ST286
SEE SHEET ST295 FOR V1, V2, V3, DETAILS
LETTERS IN HEXAGON INDICATE WELD DETAILS
LETTERS AND NUMBERS IN SQUARES INDICATE RESISTANCE WELD STRENGTH IDENTIFIED IN THE QUALITY CONTROL PROGRAM

DAMPING UNIT CONNECTION PLATE ATTACHED TO BOTTOM CHORD (COL END) IN FIELD ASSEMBLY BY OTHERS

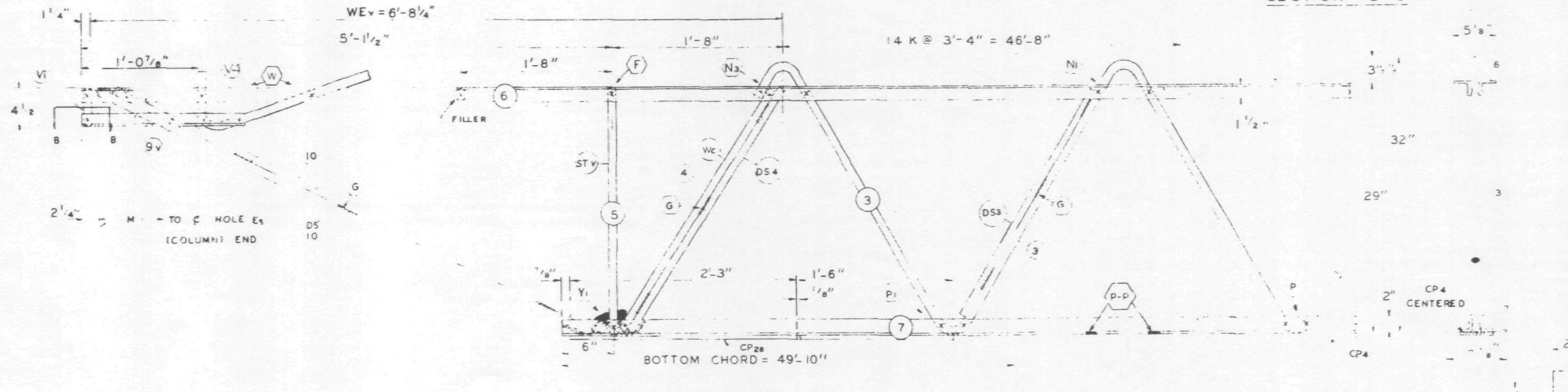

EL END (CORE)

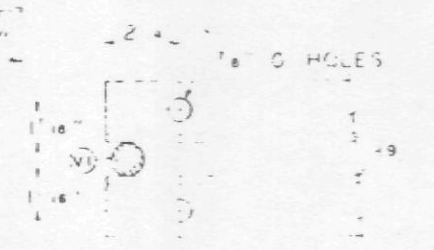

SECTION B-B

FABRICATION REQUIRMENTS	DESIGN	TOLERANCE
CAMBER AT MIDSPAN	1 15/16"	± 3/8"
DESIGN DEPTH	29"	± 1/4"
PANEL "K"	3'-4"	± 1/4"
OVERALL LENGTH	59'-8"	± 3/8"
WEB DEPTH	31 7/8"	± 1/4"

NO.	DATE	REVISION	BY

REF DRWG		
	7-AB1-24	1-6-69
	7-AB4-50	8-1-68
	7-AB3-41	1-6-69
	7-AB1-53	7-22-68

PAINT
LACLEDE ELECTROCOAT
RED NO. 10001

TRUSS DESIGNATION	TOP CHORD TWO ANGLES				BOTTOM CHORD TWO ANGLES				MAIN WEB "W"					FILLER		"M" ℄ ℄ HOLES	CONNECTION FILLERS			CHORD PLATE				CHORD PLATE			
	MK	TYPE STEEL	CHORD SIZE	LENGTH	MK	TYPE STEEL	CHORD SIZE	LENGTH	MK	TYPE STEEL	DIA	LENGTH	NO. OF K	NO	DIA.		NO	DIA	LENGTH	MK	TYPE STEEL	SIZE	LENGTH	MK.	TYPE STEEL	SIZE	LENGTH
C32T27C-598	6	A242	2"x1 1/2"x.31	59'-8"	7	A36	3"x2"x.37	49'-10"	3	A242	1.14	88'-1 1/4	14 @ 3'-4" = 46'-8"	11	1.14	59'-2 3/4"	–	–	—	CP4	A36	4"x.375"	45'-6"	CP28	A36	4"x.375"	2'-3"

COLUMN END

Es END	TRUSS DESIGNATION	BEARING ANGLES				WE	DIAGONAL "T" STRUT				VERTICAL "ST" STRUT				END STIFFENER MK. V1			END STIFFENER MK. V3			DOUBLE STRUT			
		MK	TYPE STEEL	CHORD SIZE	LENGTH		MK	TYPE STEEL	DIA	LENGTH	MK	TYPE STEEL	DIA	LENGTH	TYPE STEEL	DIA	LENGTH	TYPE STEEL	DIA	LENGTH	MK	TYPE STEEL	DIA	LGTH.
	C32T27C-598	9	A242	2"x1 1/2"x.37	2'-3"	6'-1 1/4"	1	A242	1.14	6'-3 1/8"	2	A242	1.14	2'-4 7/8"	A242	1.14	4 3/8"	A242	1.14	2'-9 1/2"	DS1	A242	.75	6'-3 1/8"

CHECK DIMENSION FOR TRUSS FAB LOCATION OF TRANS TRUSS				
CL-1	CL-2	CL-3	CL-4	Fs
9'-6 1/2"	22'-10 1/2"	36'-2 1/2"	49'-6 1/2"	5'-2 1/2"

CORE END

EL END	TRUSS DESIGNATION	BEARING ANGLES				WEv	DIAGONAL "Tv" STRUT				VERTICAL "STv" STRUT				END STIFFENER MK. V1			END STIFFENER MK. V2			END STIFFENER MK. V4			WEB "Wc"					DOUBLE STRUT				DOUBLE STRUT					DOUBLE STRUT			
		MK	TYPE STEEL	CHORD SIZE	LENGTH		MK	TYPE STEEL	DIA	LENGTH	MK	TYPE STEEL	DIA	LENGTH	TYPE STEEL	DIA.	LENGTH	TYPE STEEL	DIA.	LENGTH	TYPE STEEL	DIA.	LENGTH	MK	TYPE STEEL	PCS	DIA	LENGTH	MK	TYPE STEEL	DIA	LENGTH	MK	TYPE STEEL	DIA	LENGTH		MK	STEEL	DIA	LENGTH
	C32T27C-598	9	A242	2"x1 1/2"x.37	1'-6"	6'-8 1/4"	10	A242	1.14	5'-4 1/4"	5	A242	1.14	2'-4 7/8"	A242	1.14	4 3/8"				A242	1.14	2'-2 1/2"	4	A242	1	1.14	2'-	DS4	A242	.75	2'-9 1/2"	DS10	A242	.75	5'-4 1/4"		DS3	A24[illegible]	.75	2'-6 3/4"

STEEL TRUSS DETAILS
FOR
WORLD TRADE CENTER - N.Y.C.
FOR
THE PORT OF NEW YORK AUTHORITY

FLOOR TRUSS C32T27. 59'-8" OVERALL
WORLD TRADE CENTER TOWERS A & B

FABRICATION BY LACLEDE STEEL COMPANY		
FABRICATED AT MADISON, ILLINOIS	DESIGN DRAWING NO. 7-AB1-24	PLATE
APPROVED FOR FABRICATION BY [signature] FOR P.O.N.Y.A. DATE 6/4/69	DRAWN BY: [illegible] DATE: APRIL 17, 1969	
APPROVED FOR FABRICATION BY FOR FABRICATOR DATE	CHECKED BY T.M.CHURA DATE. APRIL 17, 1969	IN CHARGE OF PROD. DEV.
DETAILED BY A.C. WEBER	FABRICATION CONT. NO. W.T.C. 221	SHEET NO. ST227C

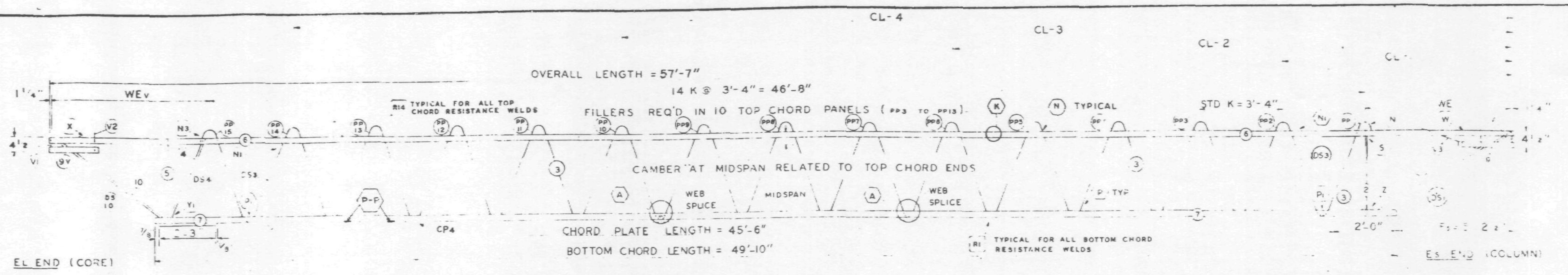

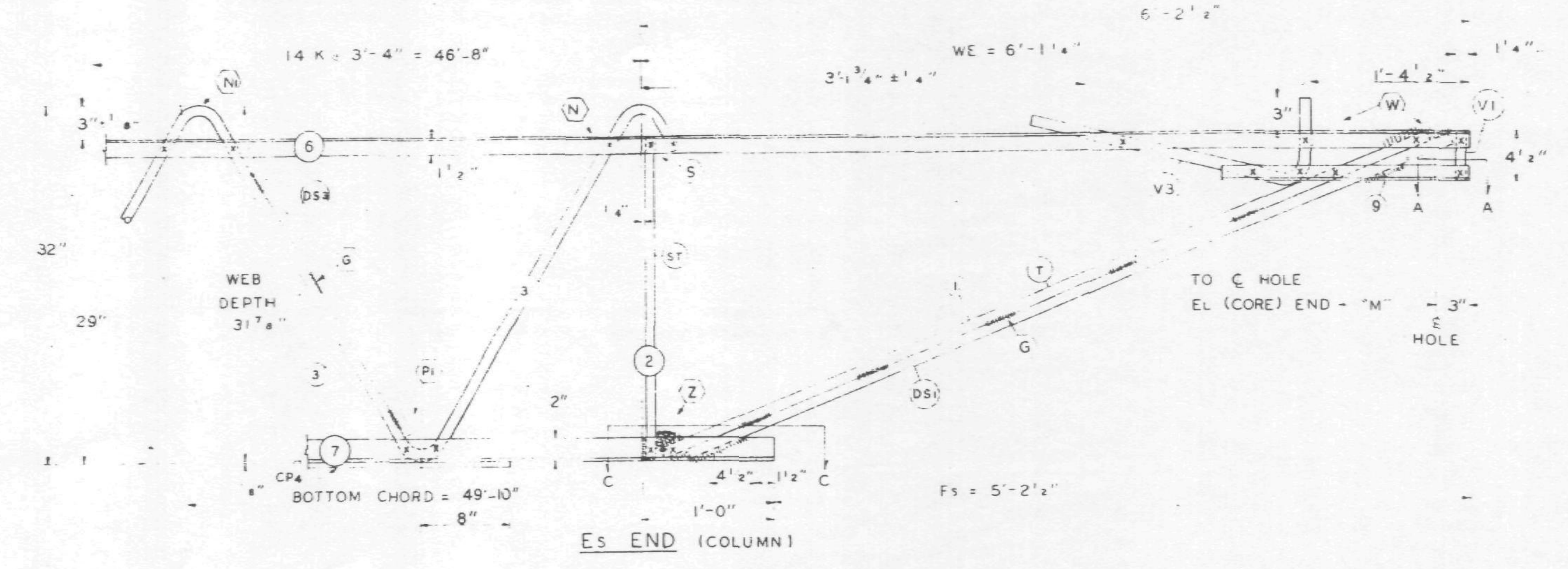

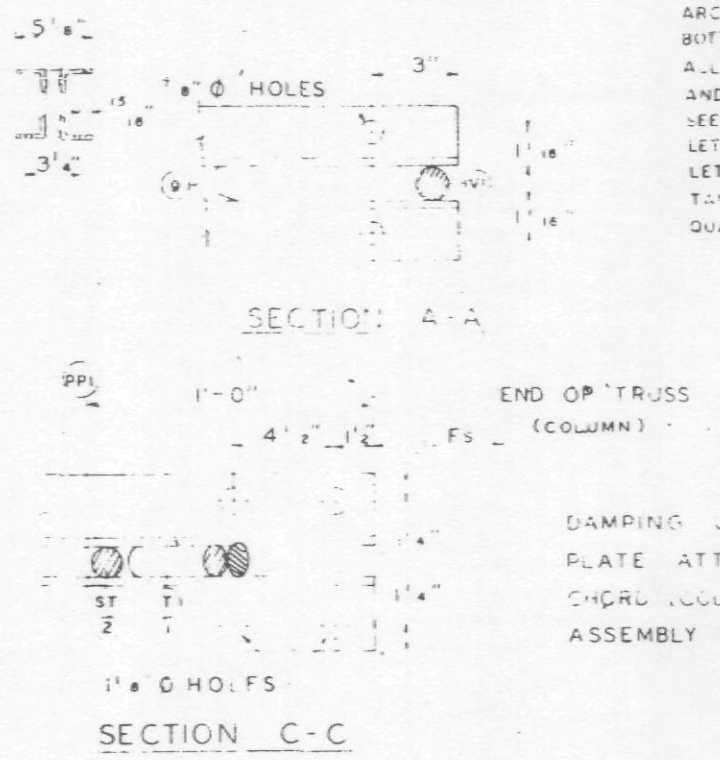

ALL PANEL POINTS RESISTANCE WELDED (X)
ARC WELDS INDICATED AT SHADED AREAS AND AT BOTTOM CHORD WEB SPLICES ( )
ALL WELD DETAILS SHOWN ON SHEETS ST290 - ST294 AND ST286
SEE SHEET ST295 FOR V1, V2, V3, DETAILS
LETTERS IN HEXAGON INDICATE WELD DETAILS [illegible] A
LETTERS AND NUMBERS IN SQUARES INDICATE RESISTANCE WELD STRENGTH IDENTIFIED IN THE QUALITY CONTROL PROGRAM [illegible] RI

DAMPING UNIT CONNECTION PLATE ATTACHED TO BOTTOM CHORD (COL END) IN FIELD ASSEMBLY BY OTHERS

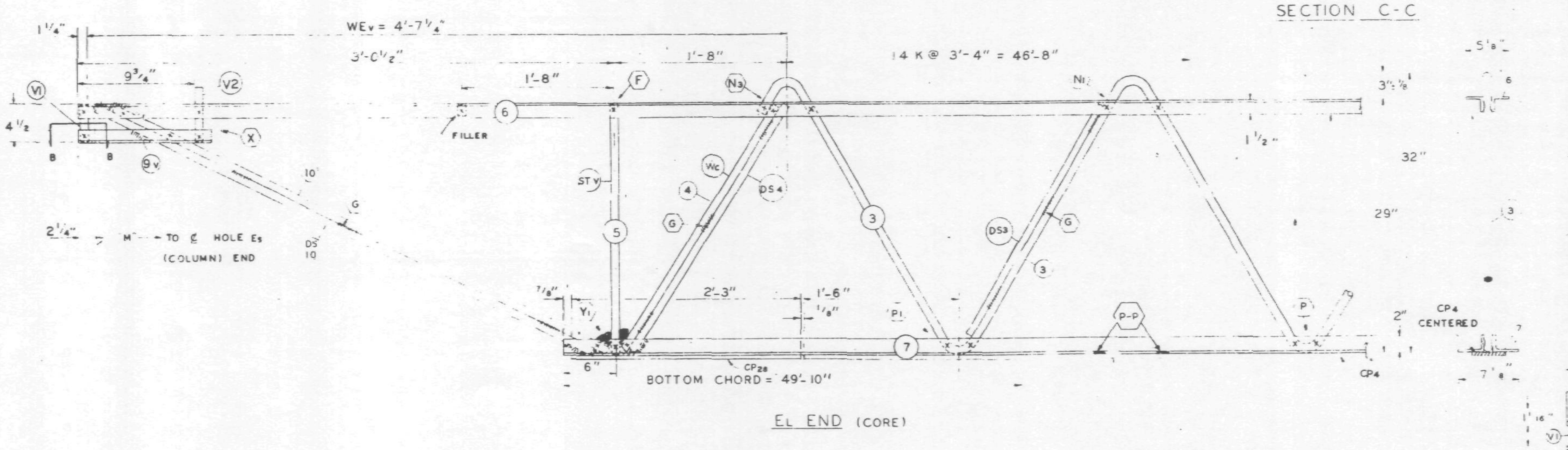

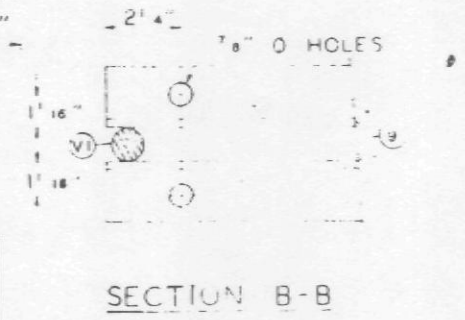

FABRICATION REQUIRMENTS

	DESIGN	TOLERANCE
CAMBER AT MIDSPAN	1 15/16"	± 3/8"
DESIGN DEPTH	29"	± 1/4"
PANEL "K"	3'-4"	± 1/4"
OVERALL LENGTH	57'-7"	± 3/8"
WEB DEPTH	31 7/8"	± 1/4"

NO.	DATE	REVISION	BY

REF DRWG

7-AB1-24	1-6-69
7-AB4-50	8-1-68
7-AB3-41	1-6-69
7-AB1-53	7-22-68

PAINT
LACLEDE ELECTROCOAT
RED NO 10001

TRUSS DESIGNATION	TOP CHORD TWO ANGLES				BOTTOM CHORD TWO ANGLES				MAIN WEB "W"					FILLER		"M" C/C HOLES	CONNECTION FILLERS			CHORD PLATE				CHORD PLATE			
	MK	TYPE STEEL	CHORD SIZE	LENGTH	MK	TYPE STEEL	CHORD SIZE	LENGTH	MK	TYPE STEEL	DIA.	LENGTH	NO. OF K	NO.	DIA.		NO	DIA	LENGTH	MK	TYPE STEEL	SIZE	LENGTH	MK	TYPE STEEL	SIZE	LENGTH
C32T2 577	6	A242	2"x1½"x.31	57'-7"	7	A36	3"x2"x.37	49'-10"	3	A242	1.14	88'-¼	14 @ 3'-4" = 46'-8"	11	.114	57'-1¾"	—	—	—	CP4	A36	4"x.375"	45'-6"	CP28	A36	4"x.375"	2'-3"

CHECK DIMENSION FOR TRUSS F LOCATION OF TRANS TRUSS

CL-1	CL-2	CL-3	CL-4	Fs
9'-6½"	22'-10½"	36'-2½"	49'-6½"	5'-2½"

COLUMN END

Es END TRUSS DESIGNATION	BEARING ANGLES				WE	DIAGONAL "T" STRUT				VERTICAL "ST" STRUT				END STIFFENER MK. V1			END STIFFENER MK. V3			DOUBLE STRUT			
	MK	TYPE STEEL	CHORD SIZE	LENGTH		MK	TYPE STEEL	DIA	LENGTH	MK	TYPE STEEL	DIA	LENGTH	TYPE STEEL	DIA	LENGTH	TYPE STEEL	DIA.	LENGTH	MK	TYPE STEEL	DIA	LGTH.
C32T27P 577	9	A242	2"x1½"x.37	2'-3"	6'-1¼"	1	A242	1.14	6'-3⅛"	2	A242	1.14	2'-4⅞"	A242	1.14	4⅜"	A242	1.14	2'-9½"	DS1	A242	.75	6'-3⅛"

CORE END

EL END TRUSS DESIGNATION	BEARING ANGLES				WEv	DIAGONAL "Tv" STRUT				VERTICAL "STv" STRUT				END STIFFENER MK. V1			END STIFFENER MK. V2			END STIFFENER MK. V4			WEB "Wc"					DOUBLE STRUT				DOUBLE STRUT				DOUBLE STRUT (RE'Q'D)			
	MK	TYPE STEEL	CHORD SIZE	LENGTH		MK	TYPE STEEL	DIA	LENGTH	MK	TYPE STEEL	DIA.	LENGTH	TYPE STEEL	DIA.	LENGTH	TYPE STEEL	DIA.	LENGTH	TYPE STEEL	DIA.	LENGTH	MK	TYPE STEEL	PCS	DIA	LENGTH	MK	TYPE STEEL	DIA	LENGTH	MK	TYPE STEEL	DIA	LENGTH	MK	TYPE STEEL	DIA	LENGTH
C32T27P 577	9	A242	2"x1½"x.37	11¾"	4'-7¼"	10	A242	1.14	3'-7"	5	A242	1.14	2'-4⅞"	A242	1.14	4⅜	A242	1.14	7⅜	—	—	—	4	A242	1	1.14	[illegible]½"	DS4	A242	.75	2'-9½"	DS10	A242	.75	3'-7"	DS3	42	.75	2'-6¾"

STEEL TRUSS DETAILS
FOR
WORLD TRADE CENTER - N.Y.C
FOR
THE PORT OF NEW YORK AUTHORITY

FLOOR TRUSS C32T27P 57'-7" OVERALL
WORLD TRADE CENTER TOWERS A & B

FABRICATION BY LACLEDE STEEL COMPANY
FABRICATED AT: MADISON, ILLINOIS
DESIGN DRAWING NO. 7-AB1-24 PLATE
APPROVED FOR FABRICATION BY [illegible] White FOR PONYA DATE 6/4/69
DRAWN BY: [illegible] DATE: APRIL 17, 1969
APPROVED FOR FABRICATION BY FOR FABRICATOR DATE
CHECKED BY T.N.CHIURA DATE APRIL 17, 1969
IN CHARGE OF PROD. DEV.
DETAILED BY: A C WEBER
FABRICATION CONT. NO. W.T.C. 221
SHEET NO. ST227P

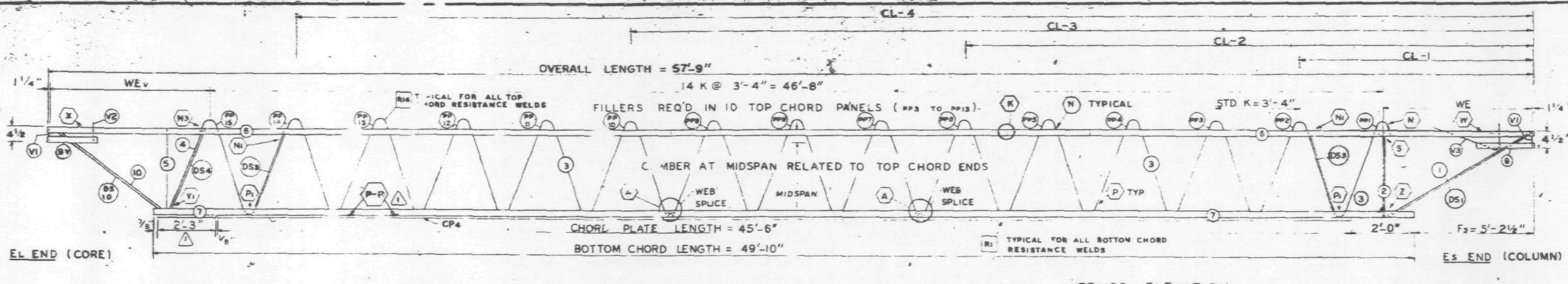

TRUSS ELEVATION

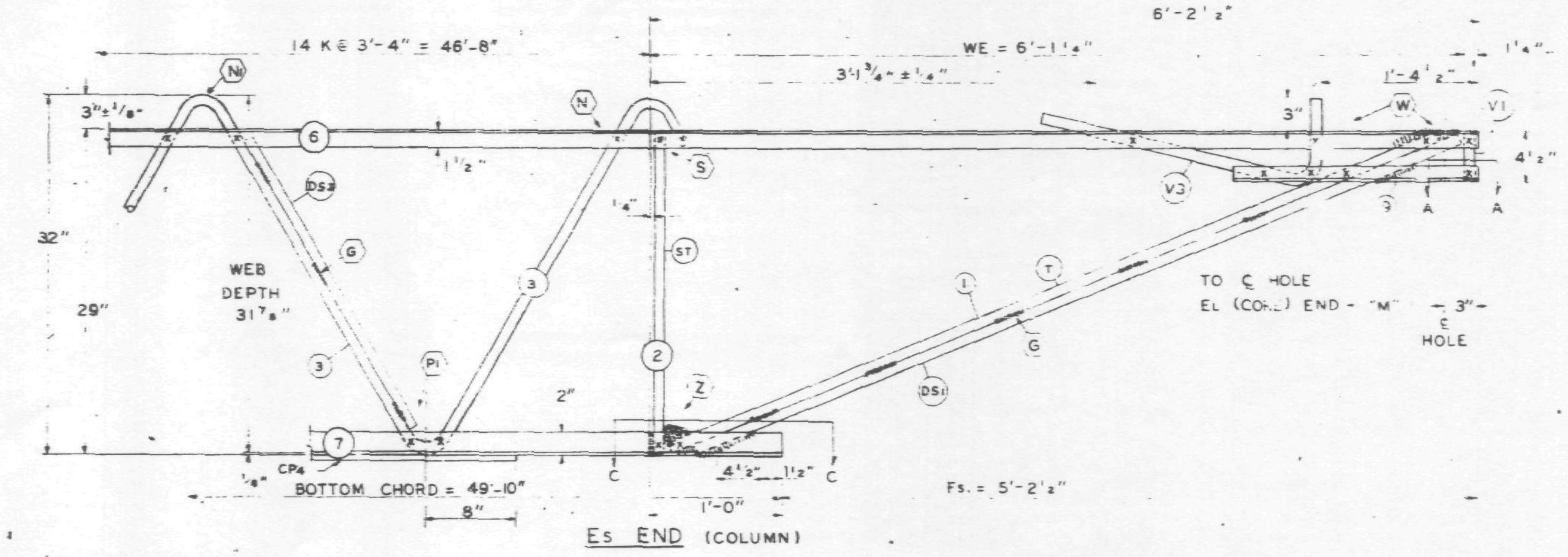

Es END (COLUMN)

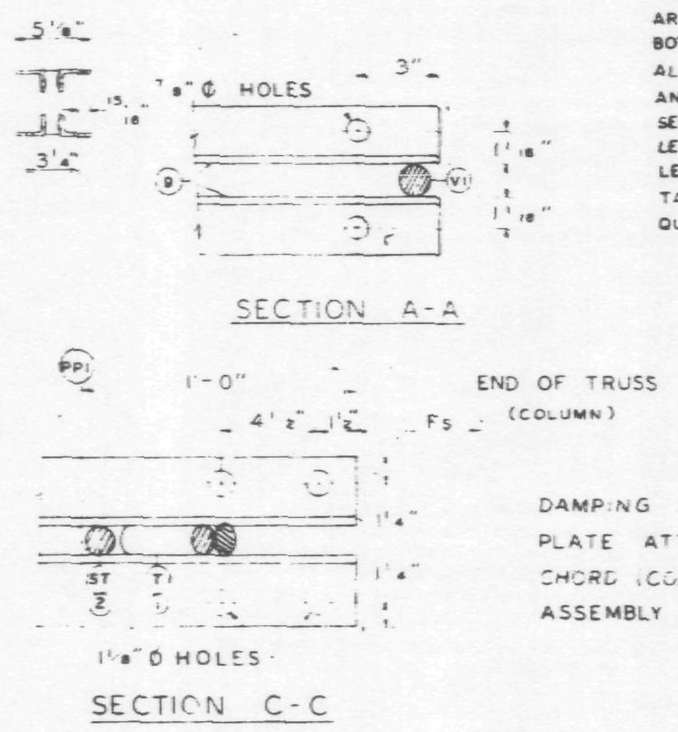

SECTION A-A

END OF TRUSS (COLUMN)

SECTION C-C

ALL PANEL POINTS RESISTANCE WELDED (X)
ARC WELDS INDICATED AT SHADED AREAS AND AT BOTTOM CHORD WEB SPLICES
ALL WELD DETAILS SHOWN ON SHEETS ST290 - ST294 AND ST286. (1)
SEE SHEET ST295 FOR V1, V2, V3, DETAILS
LETTERS IN HEXAGON INDICATE WELD DETAILS ie. (A)
LETTERS AND NUMBERS IN SQUARES INDICATE RESISTANCE WELD STRENGTH IDENTIFIED IN THE QUALITY CONTROL PROGRAM, ie. [R1]

DAMPING UNIT CONNECTION PLATE ATTACHED TO BOTTOM CHORD (COL END) IN FIELD. ASSEMBLY BY OTHERS

FABRICATION REQUIREMENTS	DESIGN	TOLERANCE
CAMBER AT MIDSPAN	1 1"	± 3/8"
DESIGN DEPTH	29"	± 1/4"
PANEL "K"	3'-4"	± [illegible]
OVERALL LENGTH	57'-9"	3/8"
WEB DEPTH	31 7/8"	± 1/4"

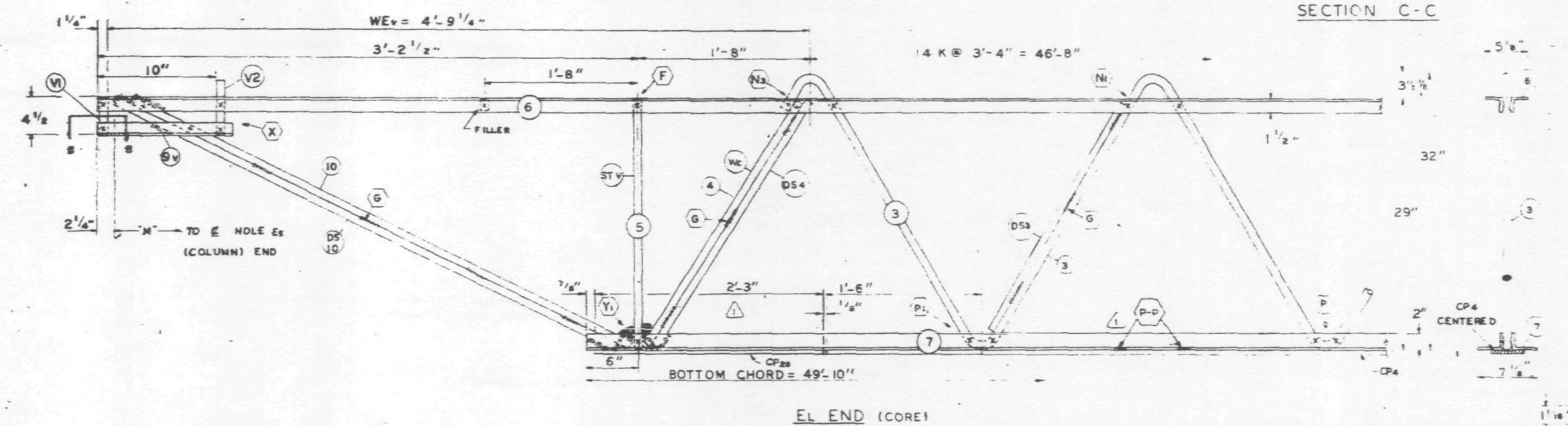

EL END (CORE)

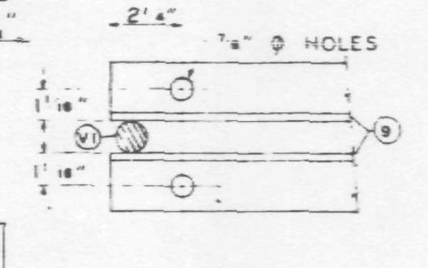

SECTION B-B

NO.	DATE	REVISION	BY
1	2-14-89	AS NOTED	S.D.C.

REF DRWG.

7-AB1-24	1-6-69
7-AB4-50	8-1-68
7-AB3-41	1-6-69
7-AB1-53	7-22-68

PAINT
LACLEDE ELECTROCOAT
RED NO. 10001

TRUSS DESIGNATION	TOP CHORD TWO ANGLES				BOTTOM CHORD TWO ANGLES				MAIN WEB "W"					FILLER		"M" C/C HOLES	CONNECTION FILLERS			CHORD PLATE				CHORD PLATE (1)			
	MK.	TYPE STEEL	CHORD SIZE	LENGTH	MK.	TYPE STEEL	CHORD SIZE	LENGTH	MK.	TYPE STEEL	DIA.	LENGTH	NO. OF K	NO	DIA.		NO	DIA.	LENGTH	MK.	TYPE STEEL	SIZE	LENGTH	MK.	TYPE STEEL	SIZE	LENGTH
C32T27N 579	6	A242	2"x1 1/2"x.31	57'-9"	7	A36	3"x2"x.37	49'-10"	3	A242	1.14	88'-1 1/4	14 @ 3'-4" = 46'-8"	11	.114	57'-3 3/4"	—	—	—	CP4	A36	4"x.375"	45'-6"	CP28	A36	4"x.375"	2'-3"

COLUMN END

Es END	TRUSS DESIGNATION	BEARING ANGLES				WE	DIAGONAL "T" STRUT				VERTICAL "ST" STRUT				END STIFF MK. V1			END STIFF [illegible]			DOUBLE STRUT			
		MK.	TYPE STEEL	CHORD SIZE	LENGTH		MK	TYPE STEEL	DIA	LENGTH	MK	TYPE STEEL	DIA.	LENGTH	TYPE STEEL	DIA.	LENGTH	TYPE STEEL	DIA.	LENGTH	MK	TYPE STEEL	DIA	LGTH.
	C32T27N-579	9	A242	2"x1 1/2"x.37 (1)	2'-3"	6'-1 1/4"	1	A242	1.14	6'-3 1/8"	2	A242	1.14	2'-4 7/8"	A242	1.14	4 3/8"	A242	1.14	2'-9 [illegible]"	DS1	A242	75	6'-3 1/8"

CHECK DIMENSION FOR TRUSS FAB. LOCATION OF TRANS. TRUSS				
CL-1	CL-2	CL-3	CL-4	Fs
9'-6 1/2"	22'-10 1/2"	36'-2 1/2"	49'-6 1/2"	5'-2 1/2"

CORE END

EL END	TRUSS DESIGNATION	BEARING ANGLES				WEv	DIAGONAL "Tv" STRUT (1)				VERTICAL "STv" STRUT				END STIFFENER MK. V1			END STIFFENER MK. V2			END STIFFENER MK. V4			WEB "Wc"					DOUBLE STRUT				DOUBLE STRUT (1)				DOUBLE STRUT			
		MK.	TYPE STEEL	CHORD SIZE	LENGTH		MK.	TYPE STEEL	DIA	LENGTH	MK.	TYPE STEEL	DIA.	LENGTH	TYPE STEEL	DIA.	LENGTH	TYPE STEEL	DIA.	LENGTH	TYPE STEEL	DIA.	LENGTH	MK	TYPE STEEL	PCS	DIA	LENGTH	MK.	TYPE STEEL	DIA	LENGTH	MK	TYPE STEEL	DIA	LENGTH	MK	TYPE STEEL	DIA	LENGTH
	C32T27N 579	9	A242	2"x1 1/2"x.37 (1)	1'-0"	4'-9 1/4"	10	A242	1.14	3'-8 1/4"	5	A242	1.14	2'-4 7/8"	A242	1.14	4 3/8"	A242	1.14	7 5/8"	—	—	—	4	A242	1	1.14	2'-9 1/2"	DS4	A242	.75	2'-9 1/2"	DS10	A242	75	3'-8 1/4"	DS3	A242	.75	2'-6 3/4"

STEEL TRUSS DETAILS
FOR
WORLD TRADE CENTER - N.Y.C.
FOR
THE PORT OF NEW YORK AUTHORITY

FLOOR TRUSS C32T27N 57'-9" OVERALL
WORLD TRADE CENTER TOWERS A & B

FABRICATION BY: LACLEDE STEEL COMPANY
FABRICATED AT: MADISON, ILLINOIS
DESIGN DRAWING NO. 7-AB1-24 PLATE
APPROVED FOR FABRICATION FOR P.O.N.Y.A. DATE
DRAWN BY: [illegible] DATE: JAN. 20, 1969
APPROVED FOR FABRICATION BY FOR FABRICATOR DATE
CHECKED BY: [illegible] DATE: JAN. 21, 1969
DETAILED BY LACLEDE STEEL CO.
FABRICATION CONT. NO. W.T.C. 221
SHEET NO. ST2[illegible]

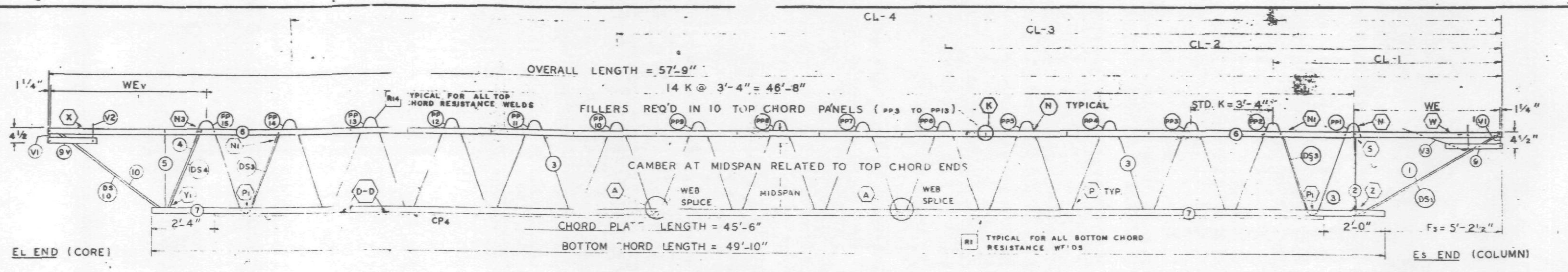

TRUSS ELEVATION

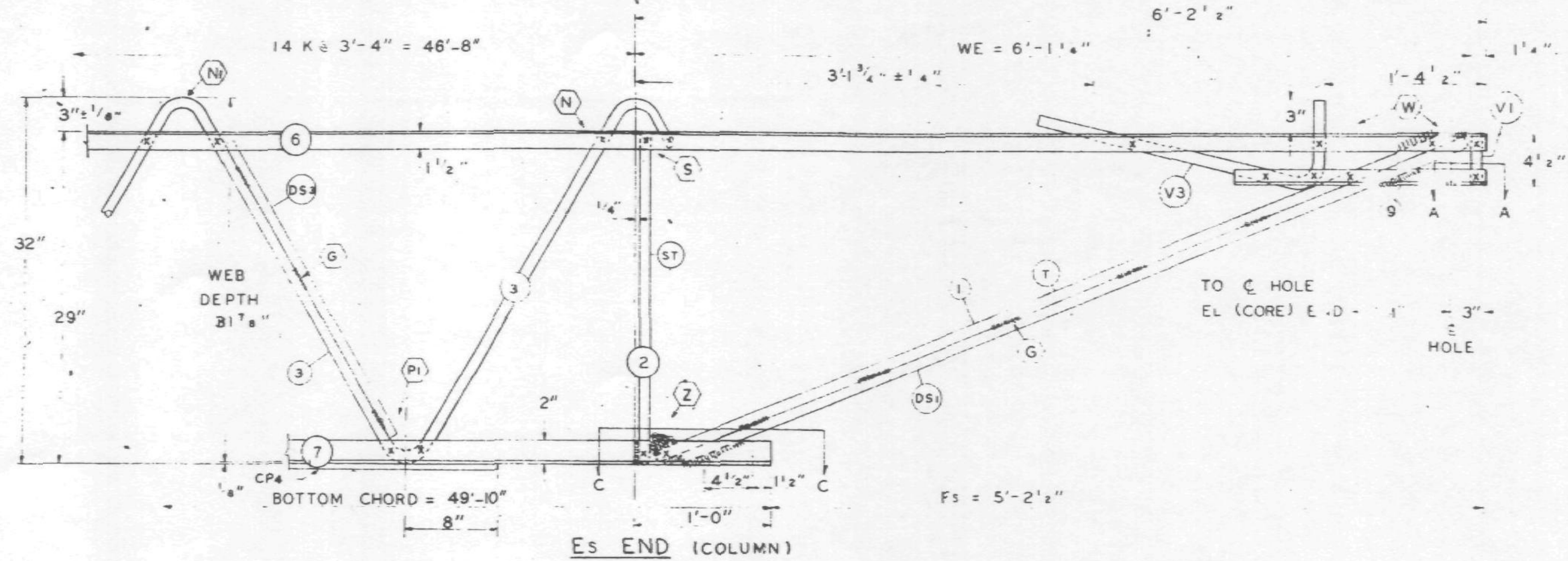

Es END (COLUMN)

ALL PANEL POINTS RESISTANCE WELDED (X)
ARC WELDS INDICATED AT SHADED AREAS AND AT BOTTOM CHORD WEB SPLICES
ALL WELD DETAILS SHOWN ON SHEETS ST290 – ST294 AND ST287.
SEE SHEET ST295 FOR V1, V2, V3, DETAILS
LETTERS IN HEXAGON INDICATE WELD DETAILS ie. (A)
LETTERS AND NUMBERS IN SQUARES INDICATE RESISTANCE WELD STRENGTH IDENTIFIED IN THE QUALITY CONTROL PROGRAM, ie., [R1]

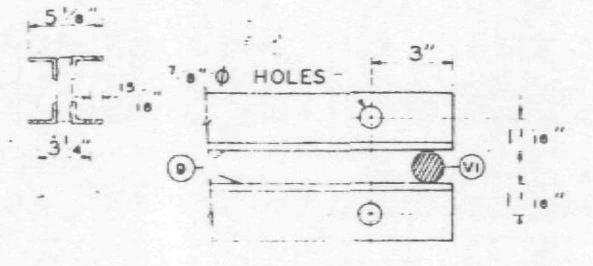

SECTION A-A

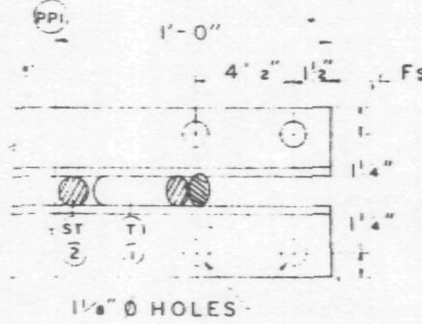

DAMPING UNIT CONNECTION PLATE ATTACHED TO BOTTOM CHORD (COL END) IN FIELD. ASSEMBLY BY OTHERS.

SECTION C-C

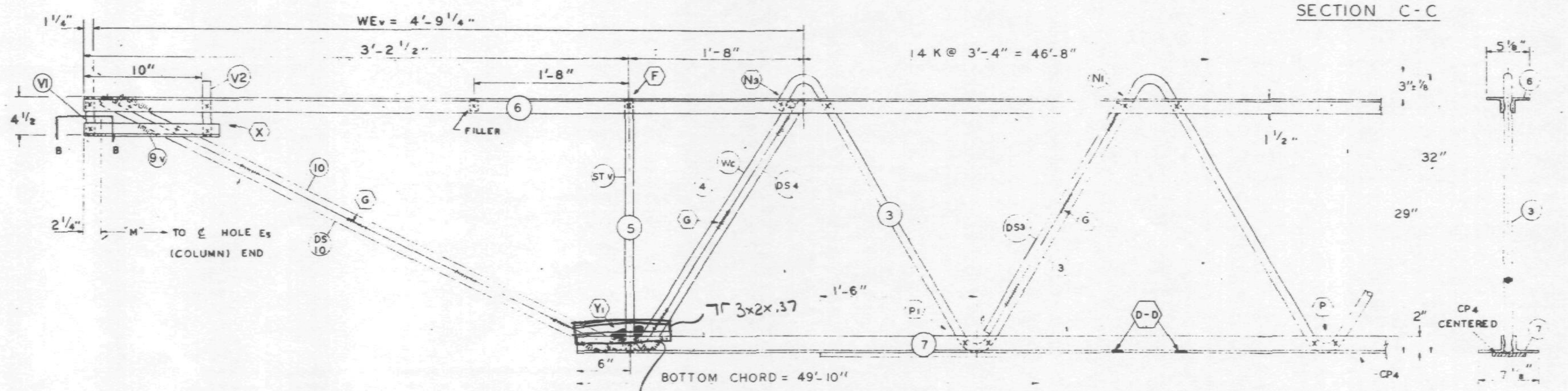

EL END (CORE)

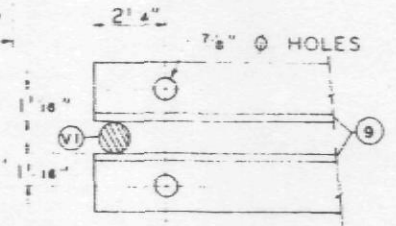

SECTION B-B

FABRICATION REQUIRMENTS	DESIGN	TOLERANCE
CAMBER AT MIDSPAN	1 15/16"	± 3/8"
DESIGN DEPTH	29"	± 1/4"
PANEL "K"	3'-4"	± 1/4"
OVERALL LENGTH	5"	± 3/8"
WEB DEPTH	31 7/8"	± 1/4

REF DRWG.

7-AB1-24	1-6-69
7-AB4-50	8-1-68
7-AB3-41	1-6-69
7-AB1-53	7-22-68

PAINT
LACLEDE ELECTROCOAT
RED NO. 10001

TRUSS DESIGNATION	TOP CHORD TWO ANGLES MK.	TYPE STEEL	CHORD SIZE	LENGTH	BOTTOM CHORD TWO ANGLES MK.	TYPE STEEL	CHORD SIZE	LENGTH	MAIN WEB "W" MK.	TYPE STEEL	DIA.	LENGTH	NO. OF K	FILLER NO.	FILLER DIA.	"M" C/C HOLES	CONNECTION FILLERS NO	DIA	LENGTH	CHORD PLATE MK	TYPE STEEL	SIZE	LENGTH
C32T27N-579	6	A242	2"x1 1/2"x.31	57'-9"	7	A36	3"x2"x.37	49'-10"	3	A242	1.14	88'-1 1/4"	14 @ 3'-4" = 46'-8"	11	1.14	57'-3 3/4"	—	—	—	CP4	A36	4"x.375"	45'-6"

COLUMN END

Es END TRUSS DESIGNATION	BEARING ANGLES MK	TYPE STEEL	CHORD SIZE	LENGTH	WE	DIAGONAL "T" STRUT MK	TYPE STEEL	DIA	LENGTH	VERTICAL "ST" STRUT MK.	TYPE STEEL	DIA	LENGTH	END STIFFENER MK. V1 TYPE STEEL	DIA.	LENGTH	MK. V3 TYPE STEEL	DIA.	LENGTH	DOUBLE STRUT MK	TYPE STEEL	DIA	LGTH.
C32T27N-579	9	A242	2"x1 1/2"x.25 (.31)	2'-3"	6'-1 1/4"	1	A242	1.14	6'-3 1/8"	2	A242	1.14	2'-4 7/8"	A242	1.14	4 3/8"	A242	1.14	2'-9 1/2"	DS1	A242	.75	6'-3 1/8"

CHECK DIMENSION FOR TRUSS FAB. LOCATION OF TRANS. TRUSS CL-1	CL-2	CL-3	CL-4	Fs
9'-6 1/2"	22'-10 1/2"	36'-2 1/2"	49'-6 1/2"	5'-2 1/2"

CORE END

EL END TRUSS DESIGNATION	BEARING ANGLES MK.	TYPE STEEL	CHORD SIZE	LENGTH	WEv	DIAGONAL "Tv" STRUT MK.	TYPE STEEL	DIA	LENGTH	VERTICAL "STv" STRUT MK.	TYPE STEEL	DIA.	LENGTH	END STIFFENER MK. V1 TYPE STEEL	DIA.	LENGTH	MK. V2 TYPE STEEL	DIA.	LENGTH	MK. V4 TYPE STEEL	DIA.	LENGTH	WEB "Wc" MK	TYPE STEEL	PCS	DIA	LENGTH	DOUBLE STRUT MK.	TYPE STEEL	DIA	LENGTH	DOUBLE STRUT MK	TYPE STEEL	DIA	LENGTH	DOUBLE STRUT (2) (REQ'D) MK	TYPE STEEL	DIA	LENGTH
C32T27N579	9	A242	2"x1 1/2"x.25 (.31)	[illegible]	4'-9 1/4"	10	A242	1.14	3'-7 3/8"	5	A242	1.14	2'-4 7/8"	A242	1.14	4 3/8"	A242	1.14	7 3/8"	—	—	—	4	A242	1	1.14	2'-9 1/2"	DS4	A242	.75	2'-9 1/2"	DS10	A242	.75	3'-7 3/8"	DS3	A242	.75	2'-6 3/4"

SKILLING - HELLE
CHRISTIANSEN - ROBERTSON
Structural & Civil Engineers
X APPROVED AS NOTED
2/19/69 SK

STEEL TRUSS DETAILS
FOR
WORLD TRADE CENTER - N.Y.C.
FOR
THE PORT OF NEW YORK AUTHORITY

FLOOR TRUSS C32T27N 57'-9" OVERALL
WORLD TRADE CENTER TOWERS A & B

FABRICATION BY: LACLEDE STEEL COMPANY			
FABRICATED AT: MADISON, ILLINOIS		DESIGN DRAWING NO. 7-AB1-24	PLATE
APPROVED FOR FABRICATION BY: ______ FOR P.O.N.Y.A.	DATE	DRAWN BY: [illegible] DATE: JAN. 20, 1969	
APPROVED FOR FABRICATION BY: A.C. WEBER FOR FABRICATOR	DATE.	CHECKED BY: T.M.CHURA DATE: JAN. 21, 1969	IN CHARGE OF PROD. DEV.
DETAILED BY: A.C. WEBER		FABRICATION CONT. NO. W.T.C. 221	SHEET NO. ST227N

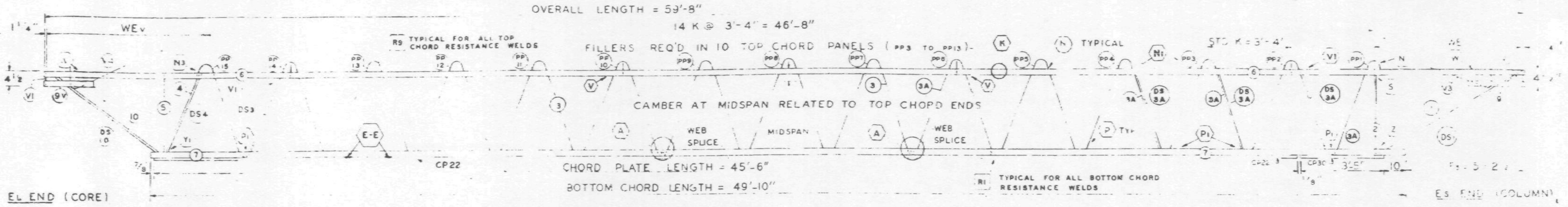

TRUSS ELEVATION

FABRICATION REQUIRMENTS	DESIGN	TOLERANCE
CAMBER AT MIDSPAN	1 15/16"	± 3/8"
DESIGN DEPTH	29"	± 1/4"
PANEL "K"	3'-4"	± 1/4"
OVERALL LENGTH	59'-8"	± 3/8"
WEB DEPTH	31 7/8"	± 1/4"

ALL PANEL POINTS RESISTANCE WELDED (X)
ARC WELDS INDICATED AT SHADED AREAS AND AT BOTTOM CHORD WEB SPLICES
ALL WELD DETAILS SHOWN ON SHEETS ST290 – ST294 AND ST286
SEE SHEET ST295 FOR V1, V2, V3, DETAILS
LETTERS IN HEXAGON INDICATE WELD DETAILS
LETTERS AND NUMBERS IN SQUARES INDICATE RESISTANCE WELD STRENGTH IDENTIFIED IN THE QUALITY CONTROL PROGRAM

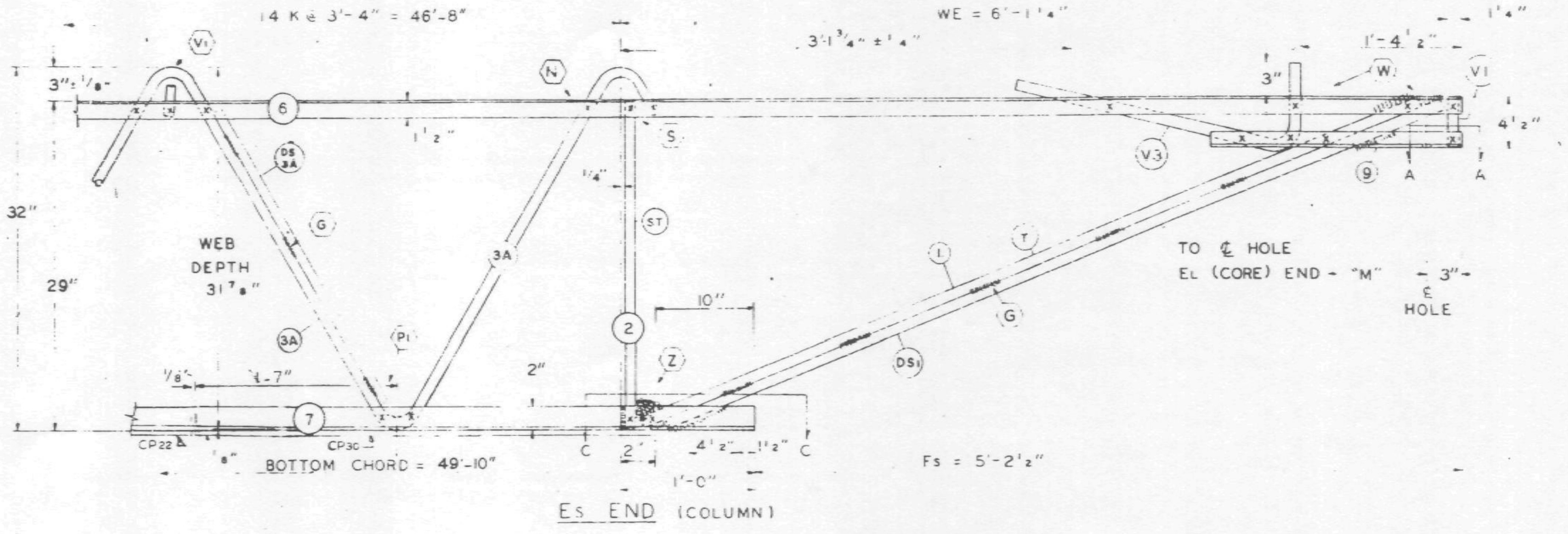

ES END (COLUMN)

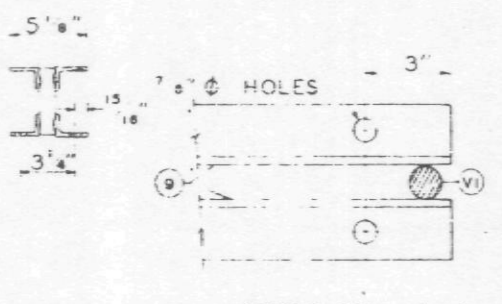

SECTION A-A

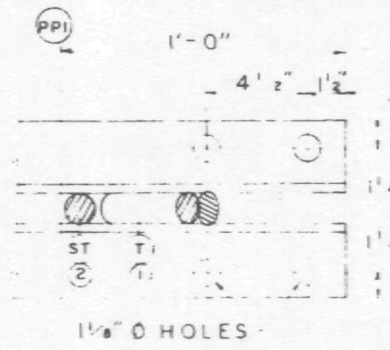

SECTION C-C

DAMPING UNIT CONNECTION PLATE ATTACHED TO BOTTOM CHORD (COL END) IN FIELD ASSEMBLY BY OTHERS

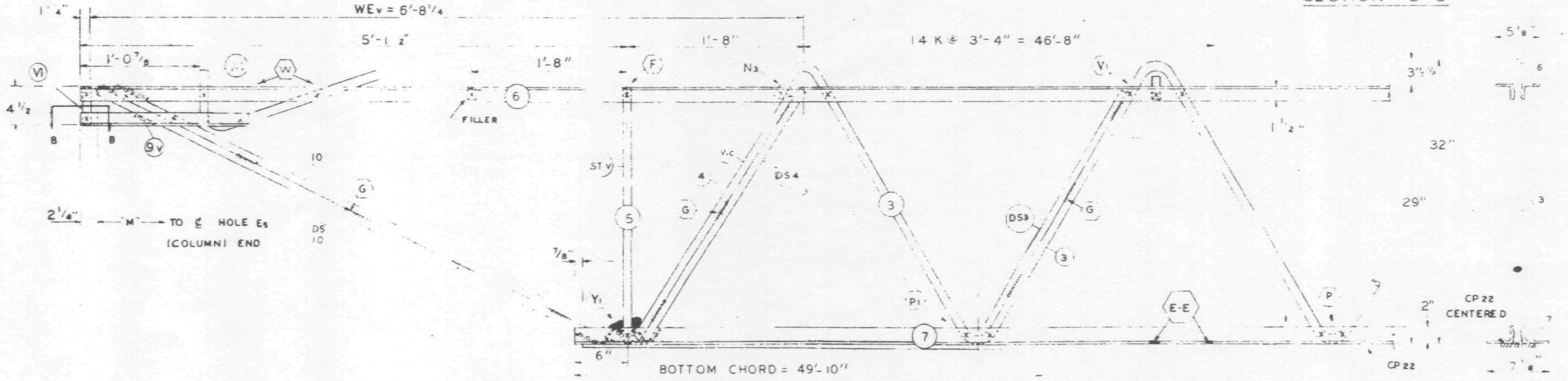

EL END (CORE)

NO	DATE	REVISION	BY

REF DRWG

7-ABI-25	1-6-68
7-AB4-50	8-1-68
7-AB3-41	1-6-69
7-ABI-53	7-22-68

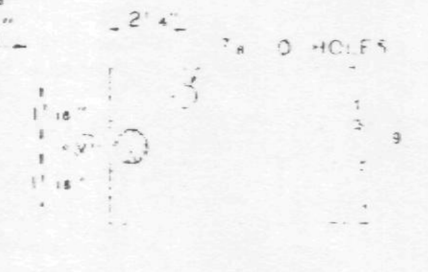

SECTION B-B

PAINT
LACLEDE ELECTROCOAT
RED NO 10001

TRUSS DESIGNATION	TOP CHORD TWO ANGLES MK	TYPE STEEL	CHORD SIZE	LENGTH	BOTTOM CHORD TWO ANGLES MK	TYPE STEEL	CHORD SIZE	LENGTH	MAIN WEB "W" MK	TYPE STEEL	DIA	LENGTH	NO. OF K	FILLER NO	DIA	"M" ℄ ℄ HOLES	CONNECTION FILLERS NO	DIA	LENGTH	CHORD PLATE MK	TYPE STEEL	SIZE	LENGTH	(3) (REQ'D) DOUBLE STRUT MK	TYPE STEEL	DIA	LENGTH
C32T28C59		A242	2"x1½"x 37"	59'-8"	7	A36	3"x 2"x 37	49'-10"	3 3A	A242 A242	1.14 1.14	53'-4 3/4 34'-8 1/2	8 1/2 K@3'-4" = 28'-4" 5 1/2 K@3'4" = 18'-4"	11	1.14	59'-2¾"	4	1.14	3"	CP 22	A36	6½"x.50	45'-6"	DS 3A	A242	.92	2'-8¾"

COLUMN END	Es END	TRUSS DESIGNATION	BEARING ANGLES MK	TYPE STEEL	CHORD SIZE	LENGTH	WE	DIAGONAL "T" STRUT MK	TYPE STEEL	DIA	LENGTH	VERTICAL "ST" STRUT MK	TYPE STEEL	DIA	LENGTH	END STIFFENER MK. V1 TYPE STEEL	DIA	LENGTH	MK V3 TYPE STEEL	DIA	LENGTH	DOUBLE STRUT MK	TYPE STEEL	DIA	LGTH.
		C32T28C59	9	A242	2"x1½"x.37"	2'-3"	6'-1¼"	1	A242	1.14	6'-3⅛"	2	A242	1.14	2'-4⅞"	A242	1.14	4⅜"	A242	1.14	2'-9½"	DS 1	A242	.98	6'-3⅛"

CHECK DIMENSION FOR TRUSS FAB LOCATION OF TRANS TRUSS

CL-1	CL-2	CL-3	CL-4	Fs
9'-6½"	22'-10½"	36'-2½"	49'-6½"	5'-2½"

CHORD PLATE MK	TYPE STEEL	SIZE	LENGTH
CP 30	A36	6½"x.50	[illegible]

CORE END	EL END	TRUSS DESIGNATION	BEARING ANGLES MK	TYPE STEEL	CHORD SIZE	LENGTH	WEv	DIAGONAL "Tv" STRUT MK	TYPE STEEL	DIA	LENGTH	VERTICAL "STv" STRUT MK	TYPE STEEL	DIA.	LENGTH	END STIFFENER MK. V1 TYPE STEEL	DIA	LENGTH	MK. V2 TYPE STEEL	DIA.	LENGTH	MK. V4 TYPE STEEL	DIA.	LENGTH	WEB "Wc" MK	TYPE STEEL	PCS	DIA	LENGTH	DOUBLE STRUT MK	TYPE STEEL	DIA	LENGTH	DOUBLE STRUT MK	TYPE STEEL	DIA	LENGTH	DOUBLE STRUT MK	TYPE STEEL	DIA	LENGTH
		C32T28C 598	9	A242	2"x1½"x.37	1'-6"	6'-8¼	10	A242	1.14	5'-4¼"	5	A242	1.14	2'-4⅞"	A242	1.14	4⅜"				A242	1.14	2'-2½"	4	A242	1	1.14	2'-9½"	[illegible]	A242	.98	2'-9½"	DS 10	A242	.98	5'-4¼"	DS 3	A242	[illegible]	2'-6¾"

STEEL TRUSS DETAILS
FOR
WORLD TRADE CENTER - N.Y.C.
FOR
THE PORT OF NEW YORK AUTHORITY

FLOOR TRUSS C32T28C 59'-8" OVERALL
WORLD TRADE CENTER TOWERS A & B

FABRICATION BY LACLEDE STEEL COMPANY
FABRICATED AT: MADISON, ILLINOIS
DESIGN DRAWING NO. 7-ABI-25 PLATE
APPROVED FOR FABRICATION BY [signature] FOR P.O.N.Y.A. DATE 6/4/69
DRAWN BY: [initials] DATE: APRIL 17, 1969
APPROVED FOR FABRICATION BY FOR FABRICATOR DATE
CHECKED BY: T.M. CHURA DATE: APRIL 17, 1969
IN CHARGE OF PROD. DEV.
DETAILED BY A.C. WEBER
FABRICATION CONT. NO. W.T.C. 221
SHEET NO. ST228C

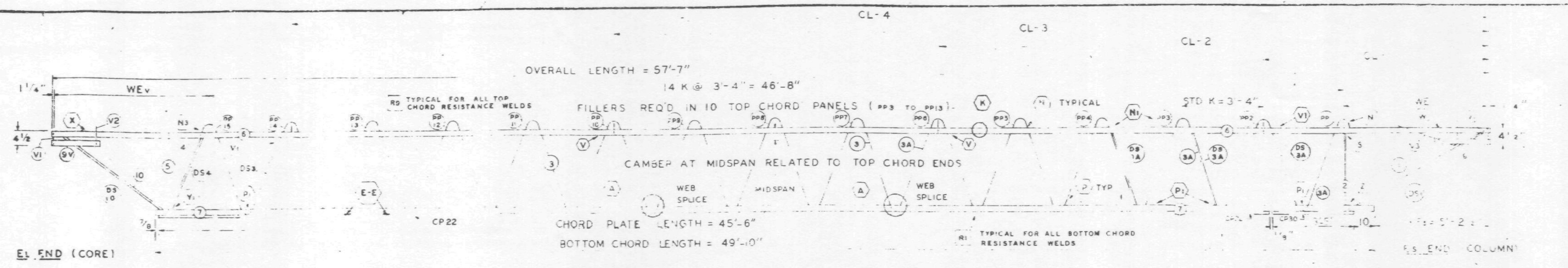

TRUSS ELEVATION

FABRICATION REQUIRMENTS	DESIGN	TOLERANCE
CAMBER AT MIDSPAN	15/16"	± 3/8"
DESIGN DEPTH	29"	± 1/4"
PANEL	3'-4"	± 1/4"
OVERALL LENGTH	57'-7"	± 3/8"
WEB DEPTH	31 7/8"	± 1/4"

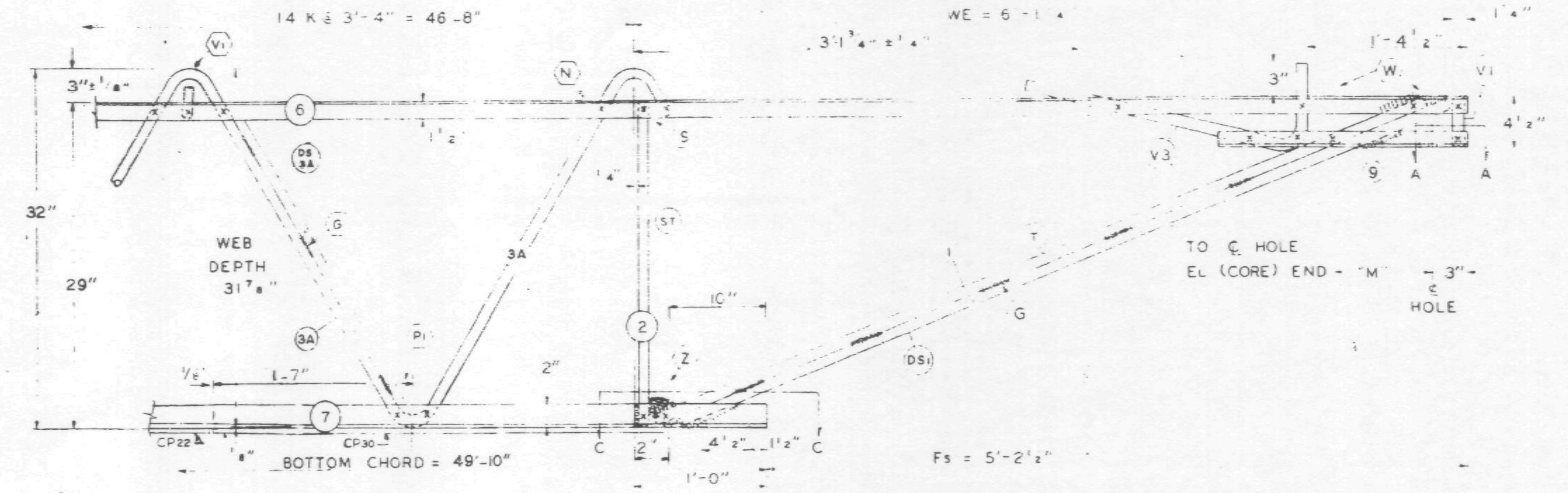

Es END (COLUMN)

ALL PANEL POINTS RESISTANCE WELDED (X)
ARC WELDS INDICATED AT SHADED AREAS AND AT BOTTOM CHORD WEB SPLICES
ALL WELD DETAILS SHOWN ON SHEETS ST290 – ST294 AND ST286
SEE SHEET ST295 FOR V1, V2, V3, DETAILS
LETTERS IN HEXAGON INDICATE WELD DETAILS
LETTERS AND NUMBERS IN SQUARES INDICATE RESISTANCE WELD STRENGTH IDENTIFIED IN THE QUALITY CONTROL PROGRAM

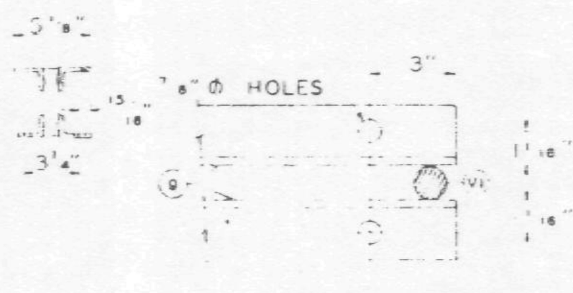

SECTION A-A

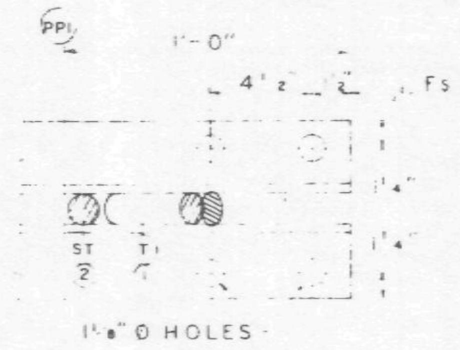

DAMPING UNIT CONNECTION PLATE ATTACHED TO BOTTOM CHORD (COL END) IN FIELD ASSEMBLY BY OTHERS

SECTION C-C

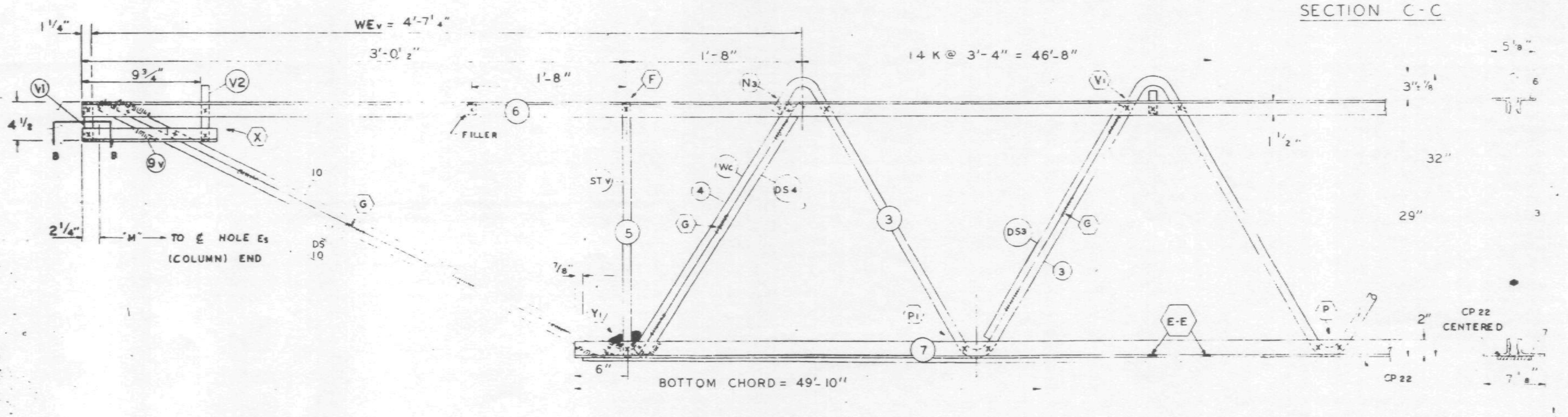

EL END (CORE)

NO	DATE	REVISION	BY

REF DRWG

7-AB1-25	1-6-68
7-AB4-50	8-1-68
7-AB3-41	1-6-69
7-AB1-53	7-22-68

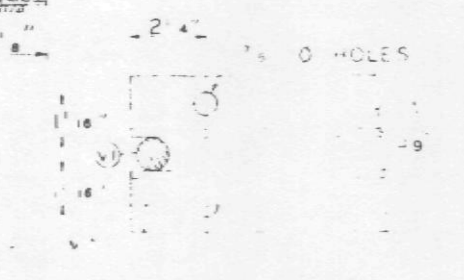

SECTION B-B

PAINT
LACLEDE ELECTROCOAT
RED NO 10001

TRUSS DESIGNATION	TOP CHORD TWO ANGLES				BOTTOM CHORD TWO ANGLES				MAIN WEB "W"					FILLER		"M" ℄ HOLES	CONNECTION FILLERS			CHORD PLATE				(3) (REQ'D) DOUBLE STRUT			
	MK	TYPE STEEL	CHORD SIZE	LENGTH	MK	TYPE STEEL	CHORD SIZE	LENGTH	MK	TYPE STEEL	DIA	LENGTH	NO OF K	NO	DIA		NO	DIA	LENGTH	MK	TYPE STEEL	SIZE	LENGTH	MK	TYPE STEEL	DIA	LENGTH
C32T28P 57	6	A242	2"x1 1/2" x 37"	57'-7"	7	A36	3"x2" x 37	49'-10"	3 3A	A242 A242	1.14 1.14	53'-4 3/4 34'-8 1/2	8 1/2 K@3'-4" : 28'-4" 5 1/2 K@3'-4" : [illegible]8'-4"	11	1.14	57'-1 3/4"	4	1.14	3"	CP 22	A36	6 1/2"x.50	45'-6"	DS 3A	A242	.92	2'-5 3/4"

COLUMN END

Es END TRUSS DESIGNATION	BEARING ANGLES				WE	DIAGONAL "T" STRUT				VERTICAL "ST" STRUT				END STIFFENER MK V1			END STIFFENER MK V3			DOUBLE STRUT			
	MK	TYPE STEEL	CHORD SIZE	LENGTH		MK	TYPE STEEL	DIA	LENGTH	MK	TYPE STEEL	DIA	LENGTH	TYPE STEEL	DIA	LENGTH	TYPE STEEL	DIA	LENGTH	MK	TYPE STEEL	DIA	LGTH
C 28P 577	9	A242	2"x1 1/2"x.37	2'-3"	6'-1 1/4"	1	A242	1.14	6'-3 1/8"	2	A242	1.14	2'-4 7/8"	A242	1.14	4 3/8"	A242	1.14	2'-9 1/2"	DS1	A242	.98	6'-3 1/8"

CHECK DIMENSION FOR TRUSS FAB
LOCATION OF TRANS TRUSS

CL-1	CL-2	CL-3	CL-4	Fs
9'-6 1/2"	22'-10 1/2"	36'-2 1/2"	49'-6 1/2"	2'-2"

CHORD PLATE			
MK	TYPE STEEL	SIZE	LENGTH
CP30	A36	6 1/2 x .50	3'-5"

TRUSS DESIGNATION	BEARING ANGLES				WEv	DIAGONAL "Tv" STRUT				VERTICAL "STv" STRUT				END STIFFENER MK V1			END STIFFENER MK V2			END STIFFENER MK V4			WEB "Wc"					DOUBLE STRUT				DOUBLE STRUT				DOUBLE STRUT		
	MK	TYPE STEEL	CHORD SIZE	LENGTH		MK	TYPE STEEL	DIA	LENGTH	MK	TYPE STEEL	DIA	LENGTH	TYPE STEEL	DIA	LENGTH	TYPE STEEL	DIA	LENGTH	TYPE STEEL	DIA	LENGTH	MK	TYPE STEEL	PCS	DIA	LENGTH	MK	TYPE STEEL	DIA	LENGTH	MK	TYPE STEEL	DIA	LENGTH	MK	TYPE STEEL	LENGTH
C32T28P 57	9	A242	2"x1 1/2"x .37	11 3/4"	4'-7 1/4"	10	A242	1.14	3'-7"	5	A242	1.14	2'-4 7/8"	A242	1.14	4 3/8"	A242	1.14	7 3/8"				4	A242	1	1.14	2'-9 1/	4	A242	.98	2'-9 1/2"	DS10	A242	.98	3'-7"	DS3	A242 .98	2'-6 3/4"

STEEL TRUSS DETAILS
FOR
WORLD TRADE CENTER - N.Y.C.
FOR
THE PORT OF NEW YORK AUTHORITY

FLOOR TRUSS C32T28P 57'-7" OVERALL
WORLD TRADE CENTER TOWERS A & B

FABRICATION BY LACLEDE STEEL COMPANY			
FABRICATED AT MADISON, ILLINOIS		DESIGN DRAWING NO 7-AB1-25	PLATE
APPROVED FOR FABRICATION BY FOR PONYA	DATE 6/4/69	DRAWN BY: DATE APRIL 25, 1969	
APPROVED FOR FABRICATION BY FOR FABRICATOR	DATE	CHECKED BY T.M.CHURA DATE APRIL 25, 1969	IN CHARGE OF PROD. DEV.
DETAILED BY A C WEBER		FABRICATION CONT NO. W T C. 221	SHEET NO. ST228P

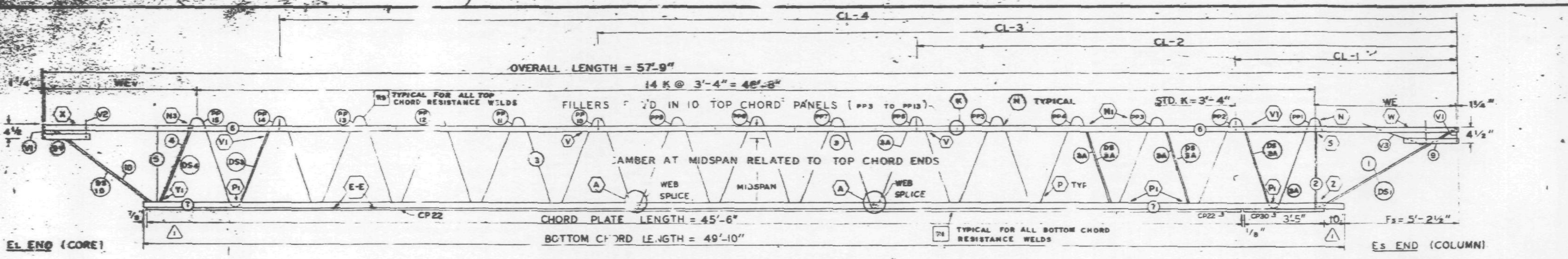

El END (CORE)

Es END (COLUMN)

TRUSS ELEVATION

"FABRICATION ..."		
CAMBER AT MIDSPAN		
DESIGN DEPTH		± 4"
PANEL "K"	3'-4"	4"
OVERALL LENGTH	5' 3"	± 3/8"
WEB DEPTH	31 7/8"	± 1/4"

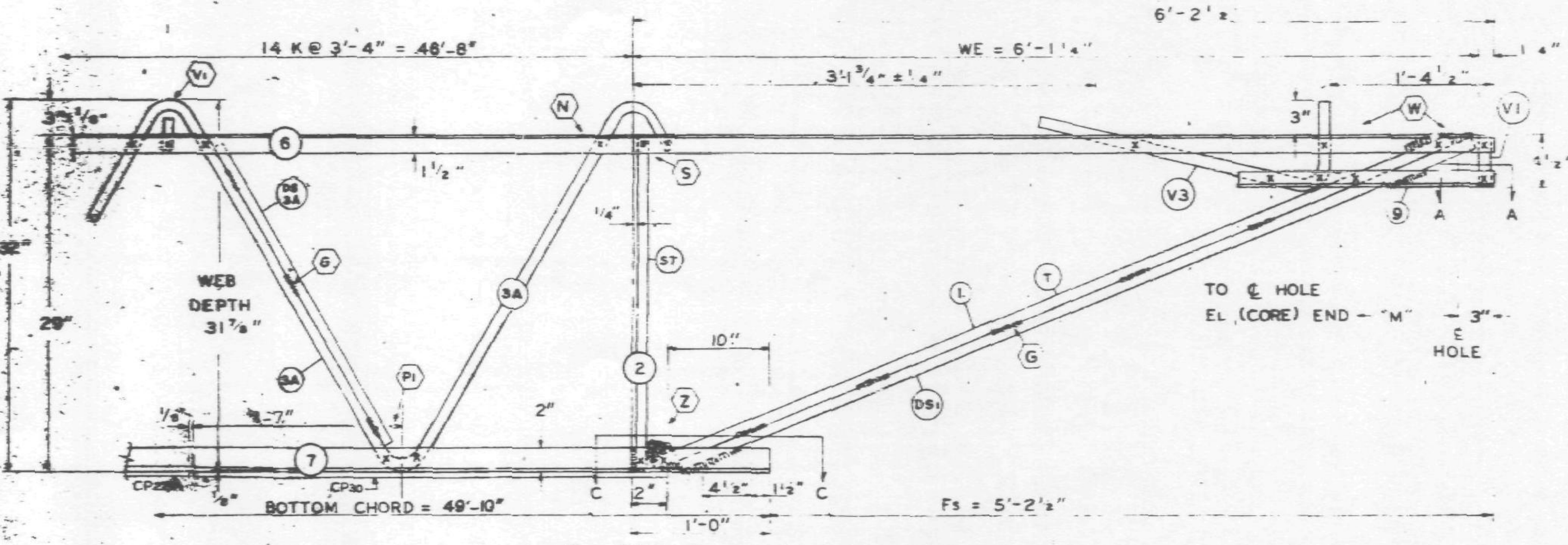

Es END (COLUMN)

ALL PANEL POINTS RESISTANCE WELDED (X)
ARC WELDS INDICATED AT SHADED AREAS AND AT BOTTOM CHORD WEB SPLICES
ALL WELD DETAILS SHOWN ON SHEETS ST290 - ST294 AND ST286 ⚠1
SEE SHEET ST295 FOR V1, V2, V3, DETAILS
LETTERS IN HEXAGON INDICATE WELD DETAILS ie. (A)
LETTERS AND NUMBERS IN SQUARES INDICATE RESISTANCE WELD STRENGTH IDENTIFIED IN THE QUALITY CONTROL PROGRAM ie. [R1]

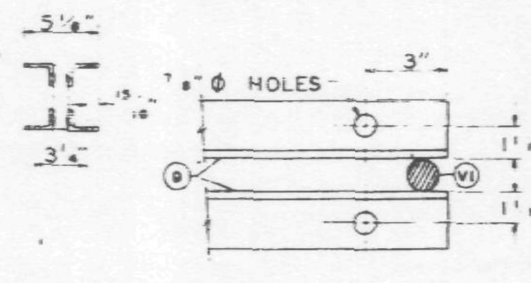

SECTION A-A

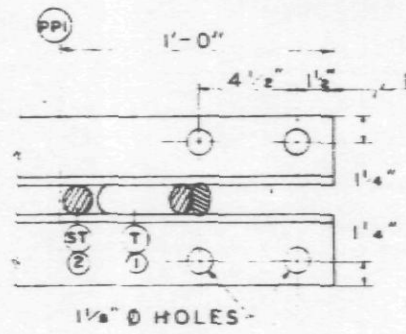

SECTION C-C

DAMPING UNIT CONNECTION PLATE ATTACHED TO BOTTOM CHORD (COL. END) IN FIELD. ASSEMBLY BY OTHERS.

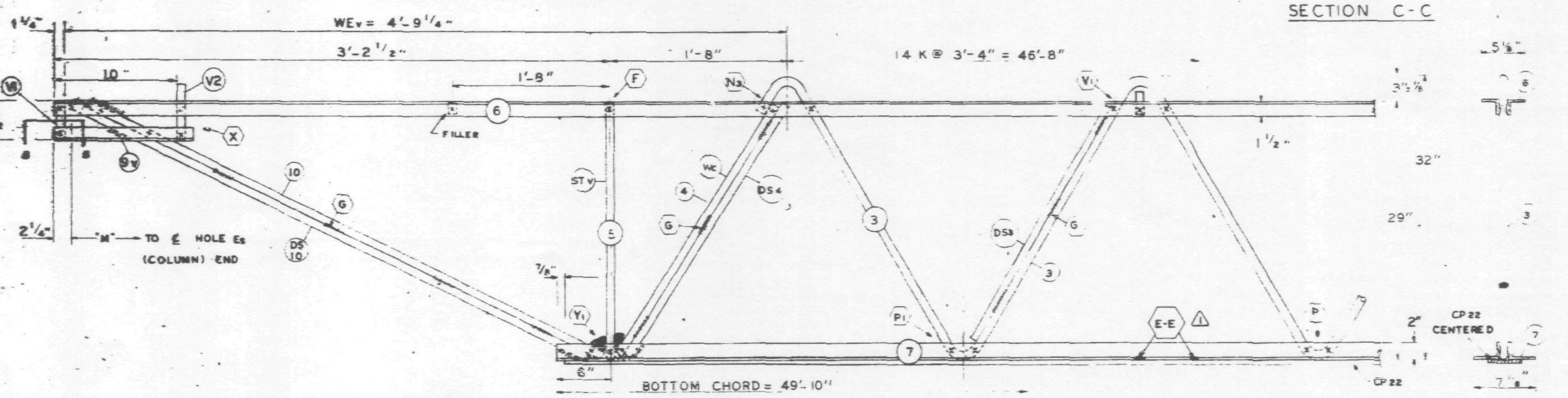

El END (CORE)

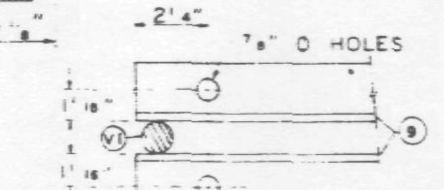

SECTION B-B

NO	DATE	REVISION	BY
⚠1	2-18-69	AS NOTED.	T.M.C.

REF DRWG.

7-AB1-25	1-8-68
7-AB4-50	8-1-68
7-AB3-41	1-6-69
7-AB1-53	7-22-68

PAINT
LACLEDE ELECTROCOAT
RED NO. 10001

TRUSS DESIGNATION	TOP CHORD TWO ANGLES				BOTTOM CHORD TWO ANGLES				MAIN WEB "W"					FILLER		"M" C-C HOLES	CONNECTION FILLERS			CHORD PLATE				(3) (REQ'D) DOUBLE STRUT			
	MK.	TYPE STEEL	CHORD SIZE	LENGTH	MK.	TYPE STEEL	CHORD SIZE	LENGTH	MK.	TYPE STEEL	DIA.	LENGTH	NO. OF K	NO.	DIA.		NO	DIA	LENGTH	MK	TYPE STEEL	SIZE	LENGTH	MK	TYPE STEEL	DIA.	LENGTH
C32T28N-579	6	A242	2"x1 1/2"x .37"	57'-9"	7	A36	3"x 2" x 37	49'-10"	3 / 3A	A242 / A242	1.14 / 1.14	53'-4 3/4 / 34'-3 1/2	8 1/2 K@3'-4" = 28'-4" / 5 1/2 K@3'-4" = 18'-4"	11	1.14	57'-3 3/4"	4	1.14	3"	CP22	A36	6 1/2"x .50	45'-6"	DS3A	A242	.92	2'-6 3/4"

COLUMN END

Es END	TRUSS DESIGNATION	BEARING ANGLES				WE	DIAGONAL "T" STRUT				VERTICAL "ST" STRUT				END STIFFENER MK. V1			END STIFFENER MK. 3			DOUBLE STRUT			
		MK.	TYPE STEEL	CHORD SIZE	LENGTH		MK	TYPE STEEL	DIA	LENGTH	MK.	TYPE STEEL	DIA.	LENGTH	TYPE STEEL	DIA.	LENGTH	TYPE STEEL	DIA.	LENGTH	MK	TYPE STEEL	DIA	LGTH.
	C32T28N-579	9	A242	2"x1 1/2"x .37"	2'-3"	6'-1 1/4"	1	A242	1.14	6'-3 1/8"	2	A242	1.14	2'-4 7/8"	A242	1.14	4 3/8"	A242	1.14	[illegible]	DS1	A242	.98	6'-3 1/8"

⚠1

CHECK DIMENSION FOR TRUSS FAB
LOCATION OF TRANS. TRUSS

CL-1	CL-2	CL-3	CL-4	Fs
9'-6 1/2"	22'-10 1/2"	36'-2 1/2"	49'-6 1/2"	5'-2 1/2"

CHORD PLATE ⚠1

MK	TYPE STEEL	SIZE	LENGTH
CP30	A36	6 1/2 x 50	3'-5"

CORE END

El END	TRUSS DESIGNATION	BEARING ANGLES				WEv	DIAGONAL "Tv" STRUT ⚠1				VERTICAL "STv" STRUT				END STIFFENER MK. V1			END STIFFENER MK. V2			END STIFFENER MK. V4			WEB "Wc"					DOUBLE STRUT				DOUBLE STRUT ⚠1				DOUBLE STRUT			
		MK.	TYPE STEEL	CHORD SIZE	LENGTH		MK	TYPE STEEL	DIA	LENGTH	MK.	TYPE STEEL	DIA.	LENGTH	TYPE STEEL	DIA.	LENGTH	TYPE STEEL	DIA.	LENGTH	TYPE STEEL	DIA.	LENGTH	MK	TYPE STEEL	PCS	DIA	LENGTH	MK.	TYPE STEEL	DIA	LENGTH	MK	TYPE STEEL	DIA	LENGTH	MK	TYPE STEEL	DIA	LENGTH
	C32T28N-579	9	A242	2"x1 1/2"x .37	1'-0"	4'-9 1/4	10	A242	1.14	3'-8 1/4	5	A242	1.14	2'-4 7/8"	A242	1.14	4 3/8	A242	1.14	7 3/8				4	A242	1	1.14	2'-9 1/2"	DS4	A242	.98	2'-9 1/2"	DS10	A242	.98	3'-8 1/4"	DS3	A242	.98	2'-6 3/4"

⚠1

STEEL TRUSS DETAILS
FOR
WORLD TRADE CENTER - N.Y.C.
FOR
THE PORT OF NEW YORK AUTHORITY

FLOOR TRUSS C32T28N 57'-9" OVERALL
WORLD TRADE CENTER TOWERS A & B

FABRICATION BY: LACLEDE STEEL COMPANY
FABRICATED AT: MADISON, ILLINOIS
DESIGN DRAWING NO. 7-AB1-25 PLATE
APPROVED FOR FABRICATION [signature] FOR P.O.N.Y.A. DATE [illegible]
DRAWN BY: [illegible] DATE: JAN. 20, 1969
APPROVED FOR FABRICATION BY ____ FOR FABRICATOR DATE
CHECKED BY: T.M.C. DATE: JAN. 21, 1969
IN CHARGE OF PROD. DEV.
DETAILED LACLEDE STEEL CO.
FABRICATION CONT. NO. W.T.C. 221
SHEET NO. ST228

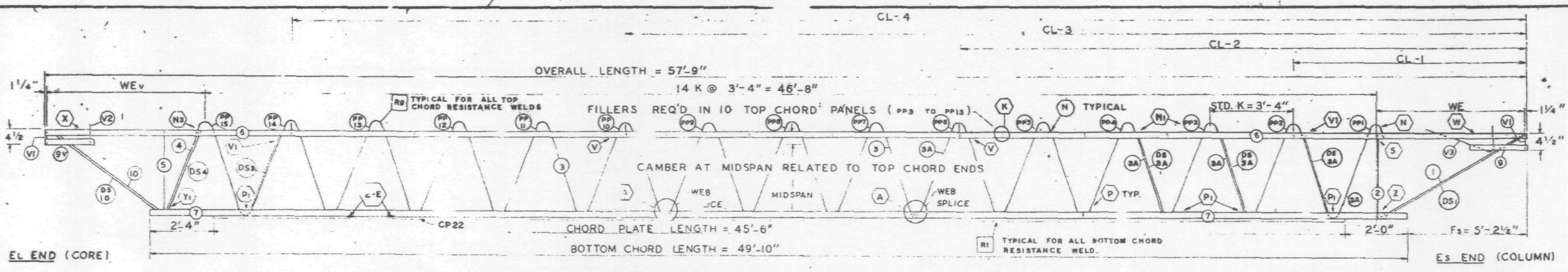

TRUSS ELEVATION

FABRICATION REQUIRMENTS	DESIGN	TOLERANCE
CAMBER AT MIDSPAN	1 15/16"	± 3/8"
DESIGN DEPTH	29"	± 1/4"
PANEL "K"	3'-4"	/4"
OVERALL LENGTH	57'-9"	- 3/8"
WEB DEPTH	31 7/8"	± 1/4"

ALL PANEL POINTS RESISTANCE WELDED (X)
ARC WELDS INDICATED AT SHADED AREAS AND AT BOTTOM CHORD WEB SPLICES
ALL WELD DETAILS SHOWN ON SHEETS ST290 - ST294 AND ST287.
SEE SHEET ST295 FOR V1, V2, V3, DETAILS
LETTERS IN HEXAGON INDICATE WELD DETAILS ie. (A)
LETTERS AND NUMBERS IN SQUARES INDICATE RESISTANCE WELD STRENGTH IDENTIFIED IN THE QUALITY CONTROL PROGRAM ie. (R1)

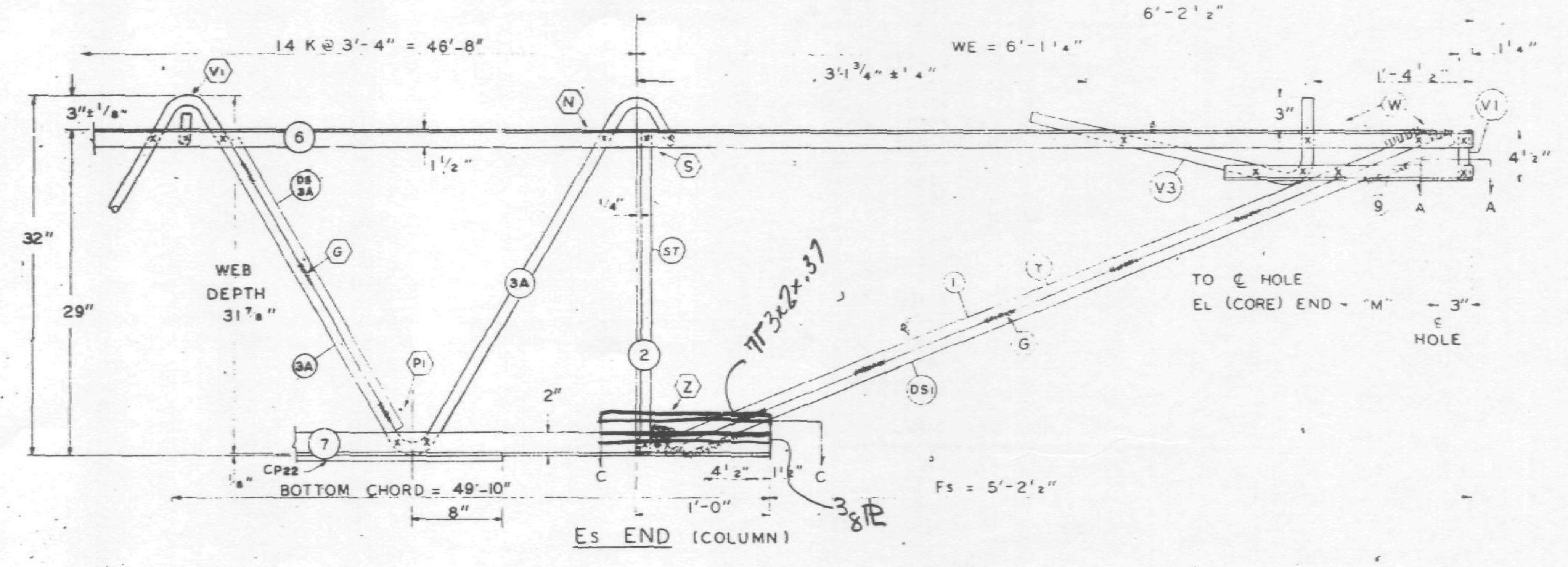

Es END (COLUMN)

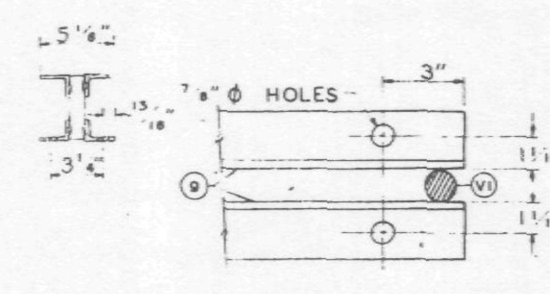

SECTION A-A

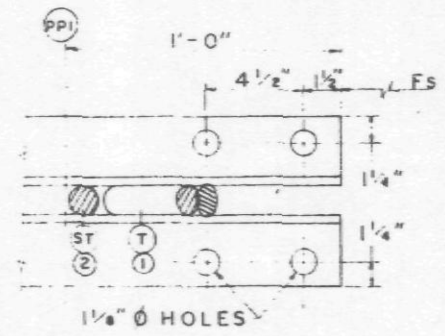

SECTION C-C

DAMPING UNIT CONNECTION PLATE ATTACHED TO BOTTOM CHORD (COL END) IN FIELD. ASSEMBLY BY OTHERS.

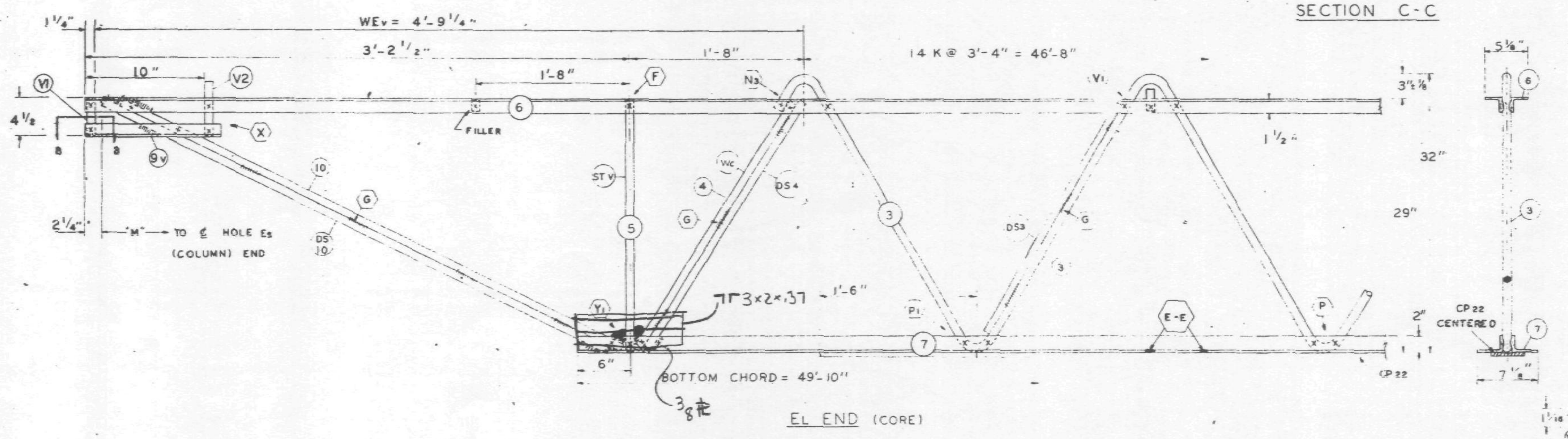

EL END (CORE)

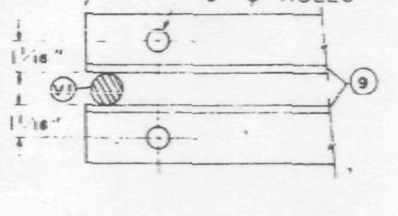

SECTION B-B

REF DRWG.

7-AB1-25	1-6-68
7-AB4-30	8-1-68
7-AB3-41	1-6-69
7-AB1-53	7-22-68

PAINT
LACLEDE ELECTROCOAT
RED NO. 10001

TRUSS DESIGNATION	TOP CHORD TWO ANGLES MK.	TYPE STEEL	CHORD SIZE	LENGTH	BOTTOM CHORD TWO ANGLES MK.	TYPE STEEL	CHORD SIZE	LENGTH	MAIN WEB "W" MK.	TYPE STEEL	DIA.	LENGTH	NO. OF K	FILLER NO.	DIA.	"M" C/C HOLES	CONNECTION FILLERS NO	DIA	LENGTH	CHORD PLATE MK	TYPE STEEL	SIZE	LENGTH	(3) (REQ'D) DOUBLE STRUT MK	TYPE STEEL	DIA.	LENGTH
C32T28N-579	6	A242	2"x1½"x .37	57'-9"	7	A36	3"x 2" x .37	49'-10"	3	A242	1.14	53'-4 3/4	8 1/2 K @ 3'-4" = 28'-4"	11	1.14	57'-3¾"	4	1.14	3"	CP 22	A36	6½"x.50	45'-6"	DS 3A	A242	.92	2'-6¾"
									3A	A242	1.14	34'-8 1/2	5 1/2 K @ 3'-4" = 18'-4"														

COLUMN END

Es END TRUSS DESIGNATION	BEARING ANGLES MK.	TYPE STEEL	CHORD SIZE	LENGTH	WE	DIAGONAL "T" STRUT MK	TYPE STEEL	DIA	LENGTH	VERTICAL "ST" STRUT MK	TYPE STEEL	DIA	LENGTH	END STIFFENER MK. V1 TYPE STEEL	DIA	LENGTH	MK. V3 TYPE STEEL	DIA	LENGTH	DOUBLE STRUT MK	TYPE STEEL	DIA	LGTH.
C32T28N-579	9	A242	2"x1½"x(.25) → .37	2'-3"	6'-1¼"	1	A242	1.14	6'-3⅛"	2	A242	1.14	2'-4⅞"	A242	1.14	4⅜"	A242	1.14	2'-9½"	DS 1	A242	.96	6'-3⅛"

CHECK DIMENSION FOR TRUSS FAB. LOCATION OF TRANS. TRUSS CL-1	CL-2	CL-3	CL-4	Fs
9'-6½"	22'-10½"	36'-2½"	49'-6½"	5'-2½"

SKILLING - HELLE CHRISTIANSEN - ROBERTSON
Structural & Civil Engineers
2/9/69 SK

CORE END

EL END TRUSS DESIGNATION	BEARING ANGLES MK.	TYPE STEEL	CHORD SIZE	LENGTH	WEv	DIAGONAL "Tv" STRUT MK.	TYPE STEEL	DIA	LENGTH	VERTICAL "STv" STRUT MK.	TYPE STEEL	DIA.	LENGTH	END STIFFENER MK. V1 TYPE STEEL	DIA.	LENGTH	MK. V2 TYPE STEEL	DIA.	LENGTH	MK. V4 TYPE STEEL	DIA.	LENGTH	WEB "Wc" MK	TYPE STEEL	PCS	DIA	LENGTH	DOUBLE STRUT MK.	TYPE STEEL	DIA	LENGTH	DOUBLE STRUT MK	TYPE STEEL	DIA	LENGTH	DOUBLE STRUT MK	TYPE STEEL	DIA	LENGTH
C32T28N-579	9	A242	2"x1½"x(.25) → .37	1'-0"	4'-9¼"	10	A242	1.14	3'-7⅜"	5	A242	1.14	2'-4⅞"	A242	1.14	4⅜"	A242	1.14	7⅜"				4	A242	1	1.14	2'-9½"	DS 4	A242	.98	2'-9½"	DS 10	A242	.98	3'-7⅜"	DS 3	A242	.98	2'-6¾"

STEEL TRUSS DETAILS
FOR
WORLD TRADE CENTER - N.Y.C
FOR
THE PORT OF NEW YORK AUTHORITY

FLOOR TRUSS C32T28N 57'-9" OVERALL
WORLD TRADE CENTER TOWERS A & B

FABRICATION BY: LACLEDE STEEL COMPANY		
FABRICATED AT: MADISON, ILLINOIS	DESIGN DRAWING NO. 7-AB1-25	PLATE
APPROVED FOR FABRICATION BY: ______ FOR P.O.N.Y.A. DATE	DRAWN BY: L.L. DATE: JAN. 20, 1969	
APPROVED FOR FABRICATION BY: A.C. WEBER FOR FABRICATOR DATE.	CHECKED BY: T.M. CHURA DATE: JAN. 21, 1969	IN CHARGE OF PROD. DEV.
DETAILED BY: A.C. WEBER	FABRICATION CONT. NO. W.T.C. 221	SHEET NO. ST228N

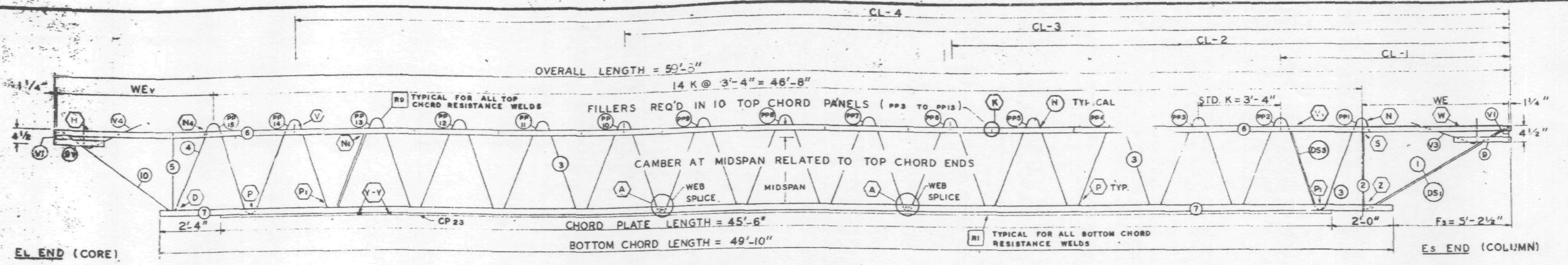

TRUSS ELEVATION

	DESIGN	TOLERANCE
CAMBER AT MIDSPAN	1 7/8"	± 3/8"
DESIGN DEPTH	29"	± 1/4"
PANEL "K"	3'-4"	± 1/4"
OVERALL LENGTH	59'-8"	± 3/8"
WEB DEPTH	31 7/8"	± 1/4"

FABRICATION REQUIRMENTS

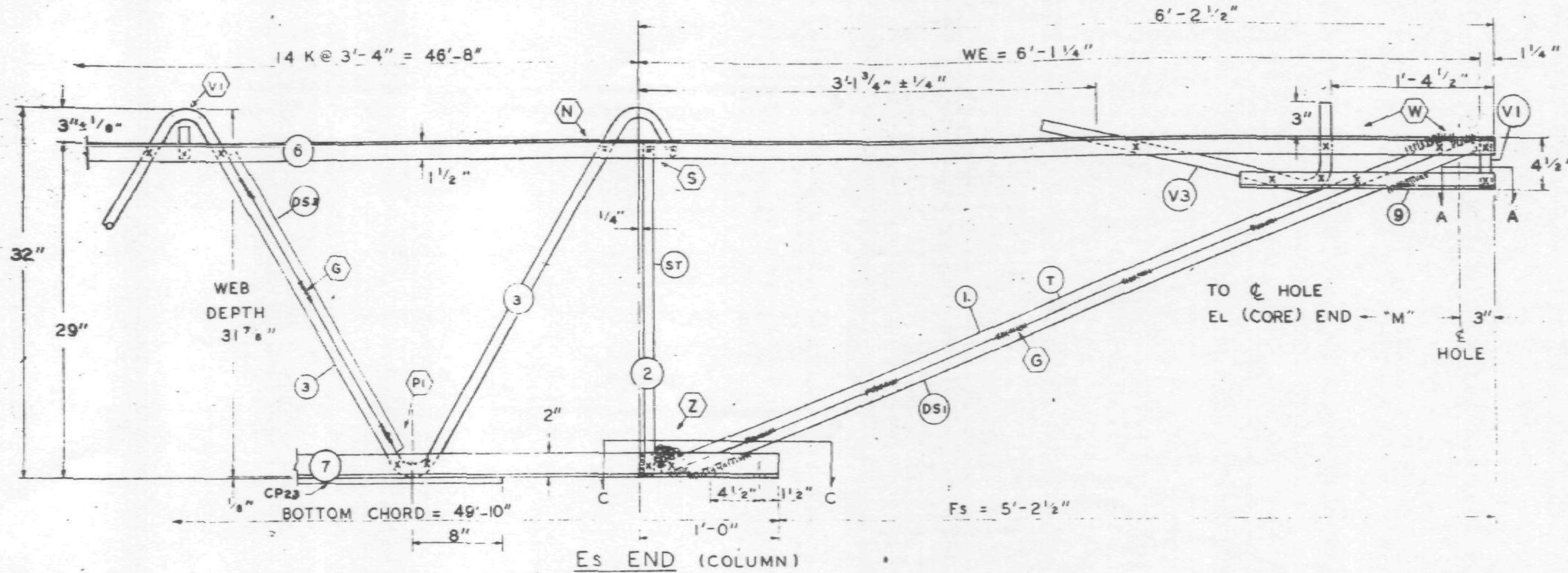

Es END (COLUMN)

ALL PANEL POINTS RESISTANCE WELDED (X)
ARC WELDS INDICATED AT SHADED AREAS AND AT BOTTOM CHORD WEB SPLICES
ALL WELD DETAILS SHOWN ON SHEETS ST290 – ST294 AND ST285.
SEE SHEET ST295 FOR V1, V2, V3. DETAILS
LETTERS IN HEXAGON INDICATE WELD DETAILS. i.e. (A)
LETTERS AND NUMBERS IN SQUARES INDICATE RESISTANCE WELD STRENGTH IDENTIFIED IN THE QUALITY CONTROL PROGRAM. i.e. [R1]

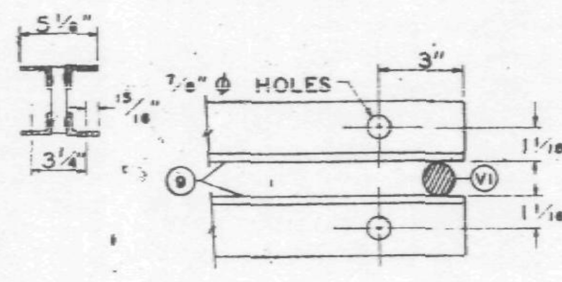

SECTION A-A

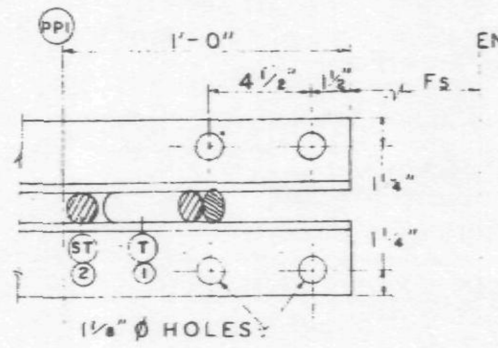

SECTION C-C

DAMPING UNIT CONNECTION PLATE ATTACHED TO BOTTOM CHORD (COL END) IN FIELD. ASSEMBLY BY OTHERS.

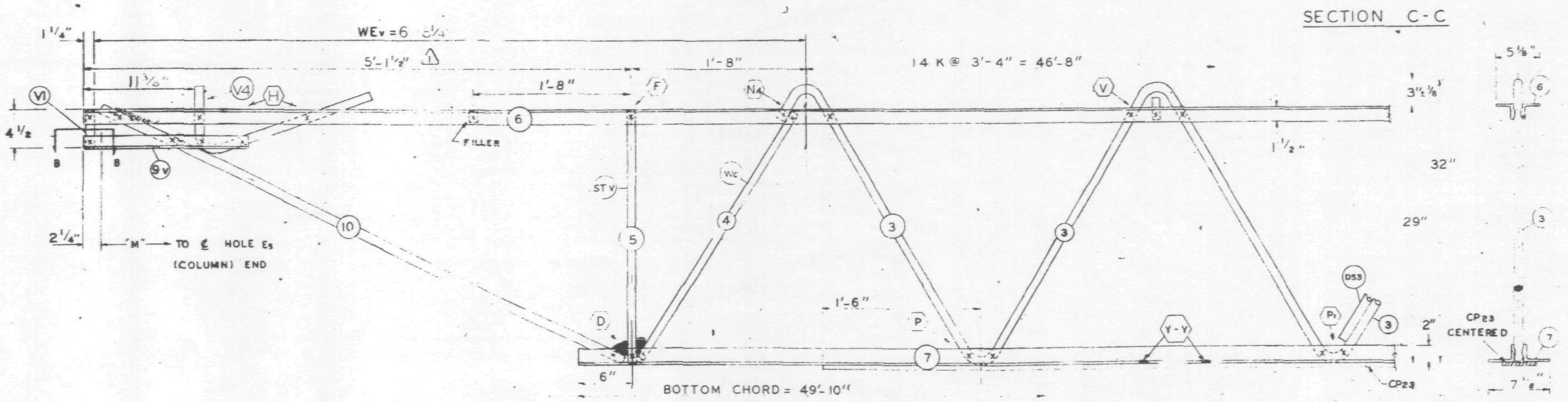

EL END (CORE)

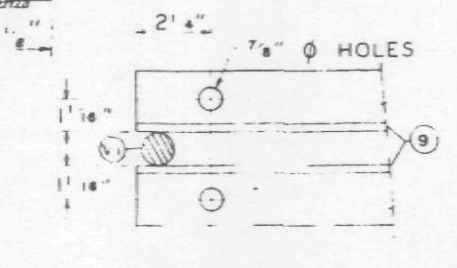

SECTION B-B

NO.	DATE	REVISION	BY
1	6-12-69	AS NOTED	G.D.C.

REF DRWG.

7-AB1-26	1-6-69
7-AB4-50	8-1-68
7-AB3-41	1-6-69
7-AB1-53	7-22-68

PAINT
LACLEDE ELECTROCOAT
RED NO. 10001

TRUSS DESIGNATION	TOP CHORD TWO ANGLES MK	TYPE STEEL	CHORD SIZE	LENGTH	BOTTOM CHORD TWO ANGLES MK	TYPE STEEL	CHORD SIZE	LENGTH	MAIN WEB "W" MK	TYPE STEEL	DIA	LENGTH	NO. OF K	FILLER NO.	DIA	"M" C/C HOLES	CONNECTION FILLERS NO	DIA	LENGTH	CHORD PLATE MK	TYPE STEEL	SIZE	LENGTH
C32T29C-598	6	A242	2"x1 1/2"x.37	59'-5"	7	A36	3"x2"x 37	49'-10"	3	A242	1.14	88'-1 1/4"	14 @ 3'-4" = 46'-8"	11	1.14	59'-2 3/4"	4	1.14	3"	CP 23	A36	4 1/2"x.39	45'-6"

COLUMN END

Es END TRUSS DESIGNATION	BEARING ANGLES MK	TYPE STEEL	CHORD SIZE	LENGTH	WE	DIAGONAL "T" STRUT MK	TYPE STEEL	DIA	LENGTH	VERTICAL "ST" STRUT MK	TYPE STEEL	DIA	LENGTH	END STIFFENER MK. V1 TYPE STEEL	DIA	LENGTH	MK. V3 TYPE STEEL	DIA	LENGTH	DOUBLE STRUT MK	TYPE STEEL	DIA	LGTH.
C32T29C-598	9	A242	2"x1 1/2"x.37	2'-3"	6'-1 1/4"	1	A242	1.14	6'-3 1/8"	2	A232	1.14	2'-4 7/8"	A242	1.14	4 3/8"	A242	1.14	2'-9 1/2"	DS1	A242	.92	6'-3 3/4"

CHECK DIMENSION FOR TRUSS FAB.

LOCATION OF TRANS. TRUSS

CL-1	CL-2	CL-3	CL-4	Fs
9'-6 1/2"	22'-10 1/2"	36'-2 1/2"	49'-6 1/2"	5'-2 1/2"

CORE END

EL END TRUSS DESIGNATION	BEARING ANGLES MK	TYPE STEEL	CHORD SIZE	LENGTH	WEv	DIAGONAL "Tv" STRUT MK	TYPE STEEL	DIA	LENGTH	VERTICAL "STv" STRUT MK	TYPE STEEL	DIA	LENGTH	END STIFFENER MK. V1 TYPE STEEL	DIA	LENGTH	MK. V2 TYPE STEEL	DIA	LENGTH	MK. V4 TYPE STEEL	DIA	LENGTH	WEB "Wc" MK	TYPE STEEL	PCS	DIA	LENGTH	DOUBLE STRUT MK	TYPE STEEL	PCS	LENGTH	DOUBLE STRUT MK	TYPE STEEL	DIA	LENGTH	(2) (REQ'D) DOUBLE STRUT MK	TYPE STEEL	DIA	LENGTH
C32T29C-598	9	A242	2"x1 1/2"x.37	1'-6"	6'-8 1/4"	10	A242	1.14	5'-5 1/4"	5	A242	1.14	2'-4 7/8"	A242	1.14	4 3/8"	—	—	—	A242	1.14	2'-2 1/2"	4	A242	1	1.14	2'-9 1/2"			—	—	—	—	—	—	DS3	A242	.75	2'-6 3/4"

STEEL TRUSS DETAILS
FOR
WORLD TRADE CENTER - N.Y.C
FOR
THE PORT OF NEW YORK AUTHORITY

FLOOR TRUSS C32T29C 59'-5" OVERALL
WORLD TRADE CENTER TOWERS A & B

FABRICATION BY: LACLEDE STEEL COMPANY
FABRICATED AT: MADISON, ILLINOIS
DESIGN DRAWING NO. 7-AB1-26 PLATE
APPROVED FOR FABRICATION FOR P.O.N.Y.A. DATE 7/28/69
DRAWN BY: DATE: MAY 1, 1969
APPROVED FOR FABRICATION BY: FOR FABRICATOR DATE.
CHECKED BY: DATE: MAY 1, 1969
IN CHARGE OF PROD. DEV.
LACLEDE STEEL CO.
DETAILED BY: A.C. WEBER
FABRICATION CONT. NO. W.T.C. 221
SHEET NO. ST229C

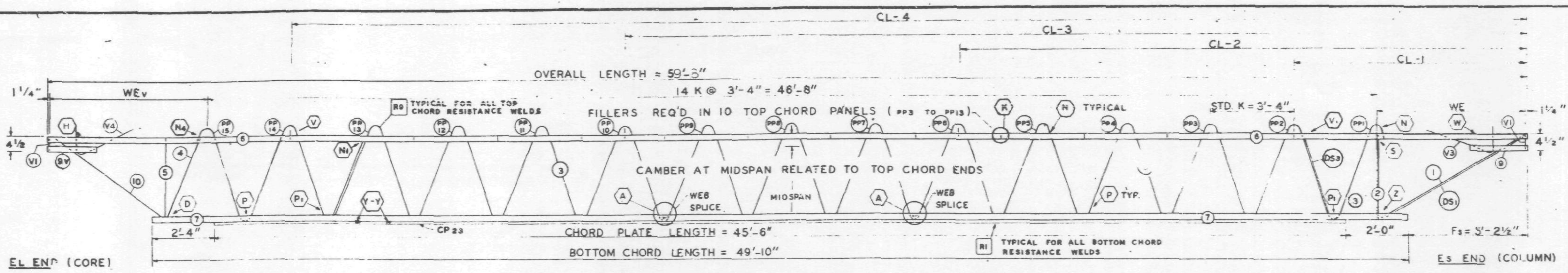

TRUSS ELEVATION

FABRICATION REQUIRMENTS	DESIGN	TOLERANCE
CAMBER AT MIDSPAN	1 7/8"	± 3/8"
DESIGN DEPTH	29"	± 1/4"
PANEL "K"	3'-4"	± 1/4"
OVERALL LENGTH	59'-8"	± 3/8"
WEB DEPTH	31 7/8"	± 1/4"

ALL PANEL POINTS RESISTANCE WELDED (X)
ARC WELDS INDICATED AT SHADED AREAS AND AT BOTTOM CHORD WEB SPLICES (IIIIIIII)
ALL WELD DETAILS SHOWN ON SHEETS ST290 – ST294 AND ST283.
SEE SHEET ST295 FOR V1, V2, V3, DETAILS
LETTERS IN HEXAGON INDICATE WELD DETAILS ie., (A)
LETTERS AND NUMBERS IN SQUARES INDICATE RESISTANCE WELD STRENGTH IDENTIFIED IN THE QUALITY CONTROL PROGRAM, ie., [R1]

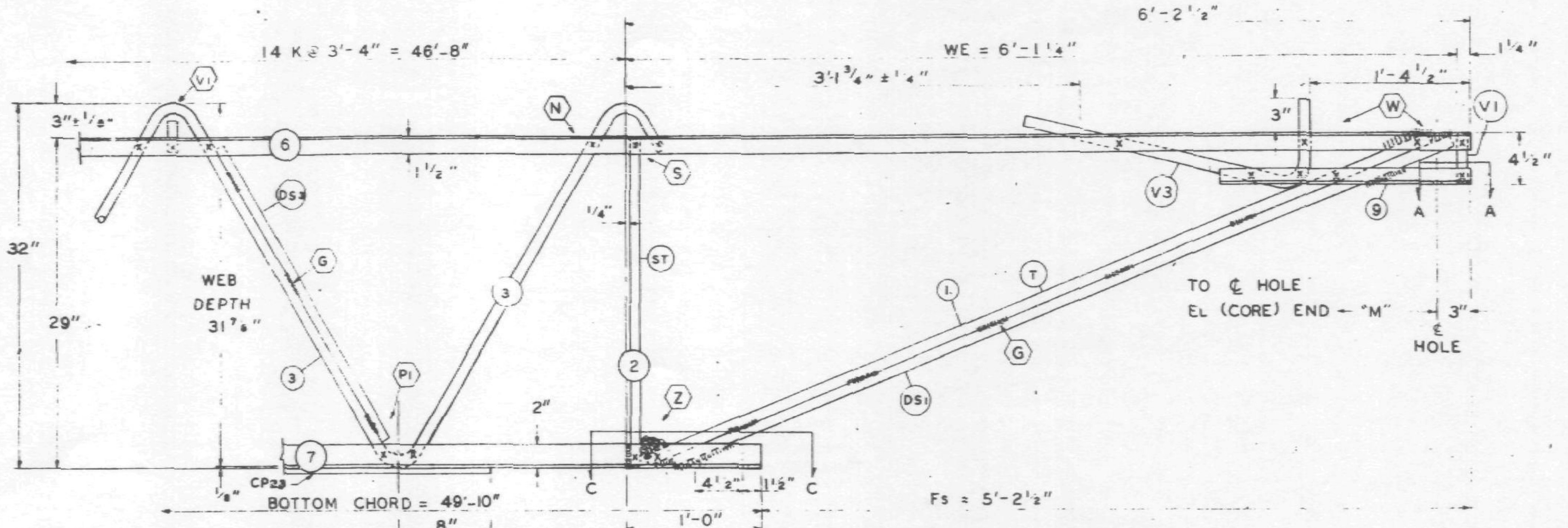

Es END (COLUMN)

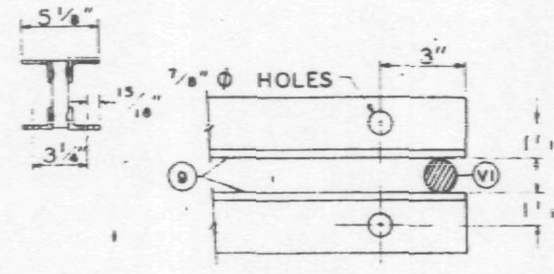

SECTION A-A

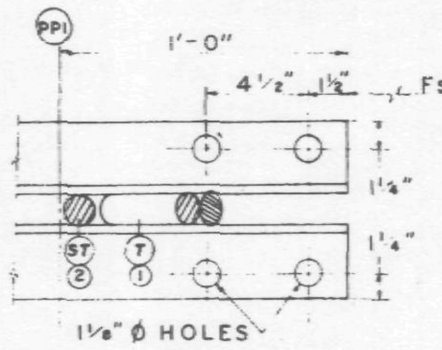

SECTION C-C

DAMPING UNIT CONNECTION PLATE ATTACHED TO BOTTOM CHORD (COL. END) IN FIELD. ASSEMBLY BY OTHERS.

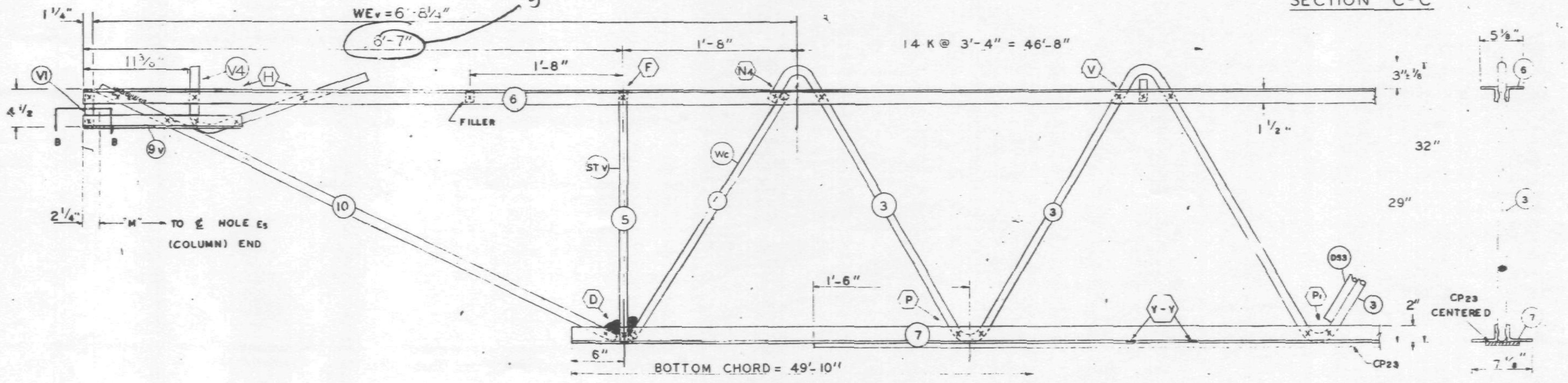

EL END (CORE)

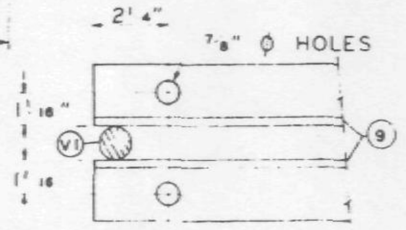

SECTION B-B

NO.	DATE	REVISION	BY

REF DRWG.

7-AB1-26	1-6-69
7-AB4-50	8-1-68
7-AB3-41	1-6-69
7-AB1-53	7-22-68

PAINT
LACLEDE ELECTROCOAT
RED NO. 10001

TRUSS DESIGNATION	TOP CHORD TWO ANGLES				BOTTOM CHORD TWO ANGLES				MAIN WEB "W"					FILLER		"M" C/C HOLES	CONNECTION FILLERS			CHORD PLATE			
	MK	TYPE EL	CHORD SIZE	LENGTH	MK	TYPE STEEL	CHORD SIZE	LENGTH	MK	TYPE STEEL	DIA.	LENGTH	NO. OF K	NO.	DIA.		( )	DIA.	LENGTH	MK	TYPE STEEL	SIZE	LENGTH
C32T29C598	6	A242	2"x1½"x.37	59'-6"	7	A36	3"x2"x.37	49'-10"	3	A242	1.14	88'-1¼"	14 @ 3'-4" = 46'-8"	11	.14	59'-2¾"	4	1.14	3"	CP 23	A36	4½"x.39	45'-6"

COLUMN END

Fs END	TRUSS DESIGNATION	BEARING ANGLES				WE	DIAGONAL "T" STRUT				VERTICAL "ST" STRUT				END STIFFENER MK. V1			END STIFFENER MK. V3			DOUBLE STRUT			
		MK	TYPE STEEL	CHORD SIZE	LENGTH		MK	TYPE STEEL	DIA	LENGTH	MK	TYPE STEEL	DIA.	LENGTH	TYPE STEEL	DIA.	LENGTH	TYPE STEEL	DIA.	LENGTH	MK	TYPE STEEL	DIA	LGTH.
	C32T29C598	9	A242	2"x1½"x.37	2'-3"	6'-1¼"	1	A242	1.14	6'-3⅛"	2	A242	1.14	2'-4⅞"	A242	1.14	4⅜"	A242	1.14	2'-9½"	DS1	A242	.92	6'-3⅛"

CHECK DIMENSION FOR TRUSS FAB. LOCATION OF TRANS. TRUSS				
CL-1	CL-2	CL-3	CL-4	Fs
9'-6½"	22'-10½"	36'-2½"	49'-6½"	5'-2½"

CORE END

EL END	TRUSS DESIGNATION	BEARING ANGLES				WEv	DIAGONAL "Tv" STRUT				VERTICAL "STv" STRUT				END STIFFENER MK. V1			END STIFFENER MK. V2			END STIFFENER MK. V4			WEB "Wc"					DOUBLE STRUT				DOUBLE STRUT				(2) DOUBLE STRUT (REQD)			
		MK.	TYPE STEEL	CHORD SIZE	LENGTH		MK.	TYPE STEEL	DIA	LENGTH	MK.	TYPE STEEL	DIA.	LENGTH	TYPE STEEL	DIA.	LENGTH	TYPE STEEL	DIA.	LENGTH	TYPE STEEL	DIA.	LENGTH	MK.	TYPE STEEL	PCS	DIA	LENGTH	MK	TYPE STEEL	PCS	LENGTH	MK	TYPE STEEL	DIA	LENGTH	MK	TYPE STEEL	D.	LENGTH
	C32T29C598	9	A242	2"x1½"x.37	1'-6"	6'-8¼"	10	A242	1.14	5'-5½"	5	A242	1.14	2'-4⅞"	A242	1.14	4⅜"				A242	1.14"	2'-2½"	4	A242	1	1.14	2'-9½"	—	—	—	—	—	—	-	--	DS3	A242	.75	2'-6¾"

STEEL TRUSS DETAILS
FOR
WORLD TRADE CENTER - N.Y.C.
FOR
THE PORT OF NEW YORK AUTHORITY

FLOOR TRUSS C32T29C 59'-8" OVERALL
WORLD TRADE CENTER TOWERS A & B

FABRICATION BY: LACLEDE STEEL COMPANY

FABRICATED AT: MADISON, ILLINOIS		DESIGN DRAWING NO. 7-AB1-26	PLATE
APPROVED FOR FABRICATION BY ______ FOR P.O.N.Y.A.	DATE	DRAWN BY: DATE: MAY 1, 1969	
APPROVED FOR FABRICATION BY ______ FOR FABRICATOR	DATE.	CHECKED BY: T.H. CHURA DATE: MAY 1 1969	IN CHARGE OF PROD. DEV.
DETAILED BY: A.C. WEBER		FABRICATION CONT. NO. W.T.C. 221	SHEET NO. ST229C

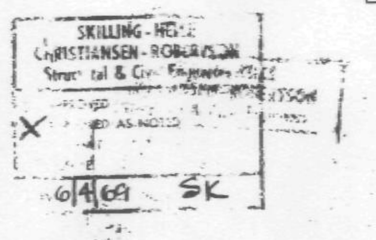

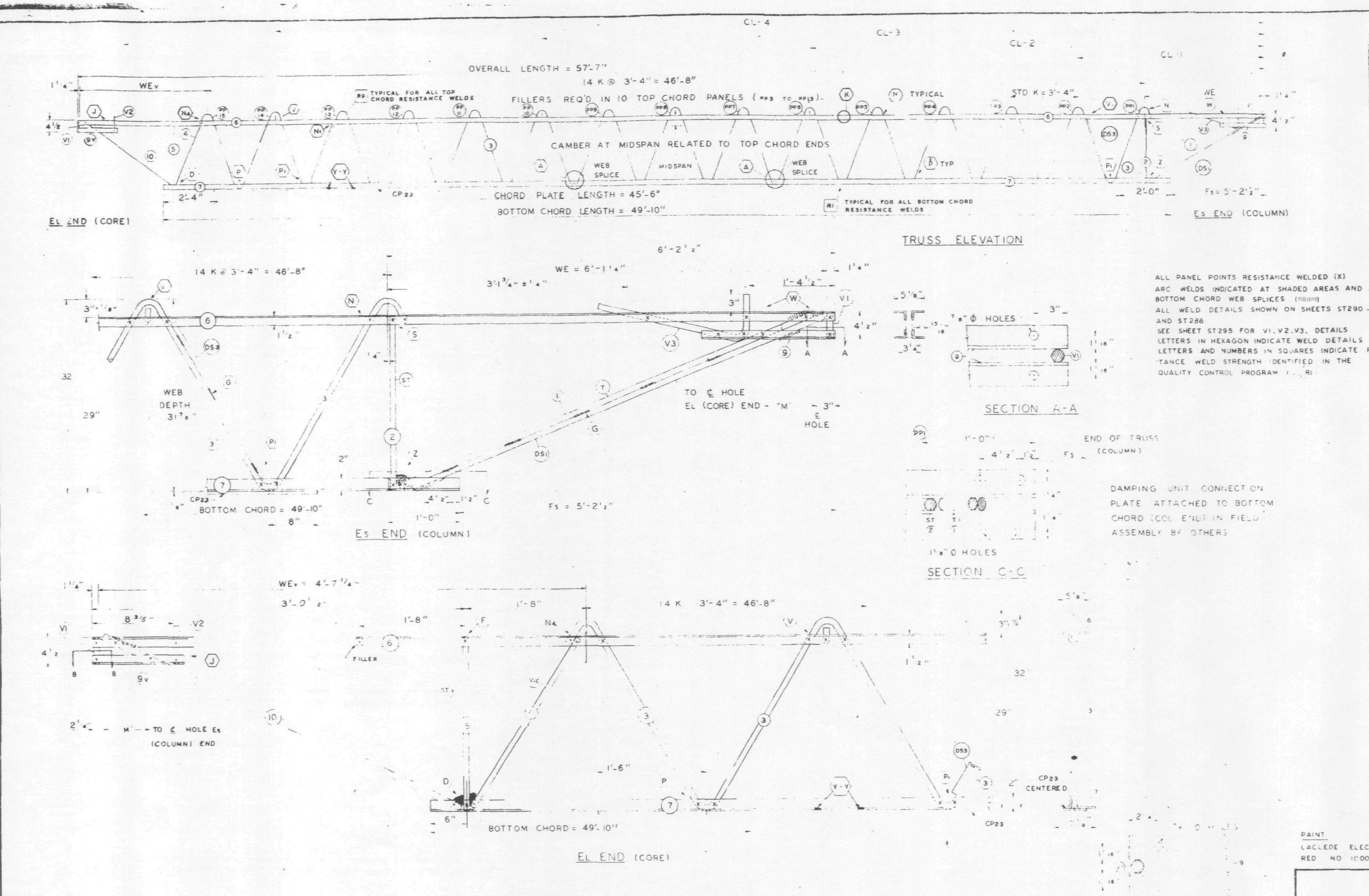

FABRICATION REQUIRMENTS	DESIGN	TOLERANCE
CAMBER AT MIDSPAN	1 7/8"	± 3/8"
DESIGN DEPTH	29"	± 1/4"
PANEL "K"	3'-4"	± 1/4"
OVERALL LENGTH	57'-7"	± 3/8"
WEB DEPTH	31 7/8"	± 1/4"

ALL PANEL POINTS RESISTANCE WELDED (X)
ARC WELDS INDICATED AT SHADED AREAS AND AT BOTTOM CHORD WEB SPLICES
ALL WELD DETAILS SHOWN ON SHEETS ST290 – ST294 AND ST286
SEE SHEET ST295 FOR V1, V2, V3, DETAILS
LETTERS IN HEXAGON INDICATE WELD DETAILS ie A
LETTERS AND NUMBERS IN SQUARES INDICATE RESISTANCE WELD STRENGTH IDENTIFIED IN THE QUALITY CONTROL PROGRAM ... R1

NO	DATE	REVISION	BY

REF DRWG

7-AB1-26	1-6-69
7-AB4-50	8-1-68
7-AB3-41	1-6-69
7-AB1-53	7-22-66

PAINT
LACLEDE ELECTROCOAT
RED NO 10001

TRUSS DESIGNATION	TOP CHORD TWO ANGLES				BOTTOM CHORD TWO ANGLES				MAIN WEB "W"					FILLER		"M" c-c HOLES	CONNECTION FILLERS			CHORD PLATE			
	MK	TYPE STEEL	CHORD SIZE	LENGTH	MK	TYPE STEEL	CHORD SIZE	LENGTH	MK	TYPE STEEL	DIA	LENGTH	NO OF K	NO	DIA		NO	DIA	LENGTH	MK	TYPE STEEL	SIZE	LENGTH
C32T29P 57..	6	A242	2"x1½"x.37	57'-7"	7	A36	3"x2"x 37	49'-10"	3	A242	1.14	88'-1¼"	14 @ 3'-4" = 46'-8"	11	.14	57'-1¾"	4	1.14	3"	CP 23	A36	4½"x.39	45'-6"

COLUMN END

ES END TRUSS DESIGNATION	BEARING ANGLES				WE	DIAGONAL "T" STRUT				VERTICAL "ST" STRUT				END STIFFENER MK V1			END STIFFENER MK V3			DOUBLE STRUT			
	MK	TYPE STEEL	CHORD SIZE	LENGTH		MK	TYPE STEEL	DIA	LENGTH	MK	TYPE STEEL	DIA	LENGTH	TYPE STEEL	DIA	LENGTH	TYPE STEEL	DIA	LENGTH	MK	TYPE STEEL	DIA	LGTH.
C32T29P 577	9	A242	2"x1½"x.37	2'-3"	6'-1¼"	1	A242	1.14	6'-3⅛"	2	A242	1.14	2'-4⅞"	A242	1.14	4⅜"	A242	1.14	2'-9½"	DS1	A242	.92	6'-3⅛"

CHECK DIMENSION FOR TRUSS FAB LOCATION OF TRANS TRUSS

CL-1	CL-2	CL-3	CL-4	Fs
9'-6½"	22'-10½"	36'-2½"	49'-6½"	5'-2½"

CORE END

EL END TRUSS DESIGNATION	BEARING ANGLES				WEv	DIAGONAL "Tv" STRUT				VERTICAL "STv" STRUT				END STIFFENER MK. V1			END STIFFENER MK. V2			END STIFFENER MK. V4			WEB "Wc"					DOUBLE STRUT				DOUBLE STRUT				(2) DOUBLE STRUT (REQ'D)			
	MK	TYPE STEEL	CHORD SIZE	LENGTH		MK	TYPE STEEL	DIA	LENGTH	MK	TYPE STEEL	DIA.	LENGTH	TYPE STEEL	DIA.	LENGTH	TYPE STEEL	DIA.	LENGTH	TYPE STEEL	DIA.	LENGTH	MK	TYPE STEEL	PCS	DIA	LENGTH	MK	TYPE STEEL	PCS	LENGTH	MK	TYPE STEEL	DIA	LENGTH	MK	TYPE STEEL	A	LENGTH
C32T29P 577	9	A242	2"x1½"x.37	10¼"	4'-7¼"	10	A242	1.14	3'-8½"	5	A242	1.14	2'-4⅞"	A242	1.14	4⅜"	A242	1.14	7⅜"	–	–	–	4	A242	1	1.14	2'-9"	–	–	–	–	–	–	–	–	DS3	A242	.75	2'-6¾"

STEEL TRUSS DETAILS
FOR
WORLD TRADE CENTER - N Y C
FOR
THE PORT OF NEW YORK AUTHORITY

FLOOR TRUSS C32T29P 57'-7" OVERALL
WORLD TRADE CENTER TOWERS A & B

FABRICATION BY LACLEDE STEEL COMPANY
FABRICATED AT: MADISON, ILLINOIS
DESIGN DRAWING NO. 7-AB1-26 PLATE 1
APPROVED FOR FABRICATION BY ... FOR PONYA DATE 6/4/69
DRAWN BY: L.S. DATE: APRIL 25, 1969
APPROVED FOR FABRICATION BY ____ FOR FABRICATOR DATE
CHECKED BY: T.M. CHURA DATE: APRIL 25, 1969
IN CHARGE OF PROD. DEV.
DETAILED BY: A.C. WEBER
FABRICATION CONT. NO. W.T.C. 221
SHEET NO. ST229P

[illegible]		
[illegible]		
CAMBER AT [illegible]	[illegible]	
DESIGN DEPTH	29"	± 1/16"
PANEL "K"	[illegible]	± 1/[illegible]
OVERALL LENGTH	57'-9"	± [illegible]
WEB DEPTH	31 7/8"	± [illegible]

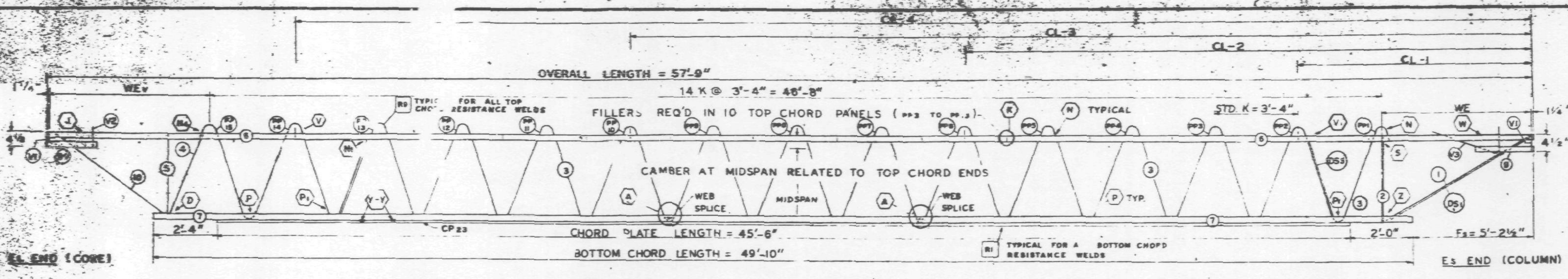

TRUSS ELEVATION

ALL PANEL POINTS RESISTANCE WELDED (X)
ARC WELDS INDICATED AT SHADED AREAS AND AT BOTTOM CHORD WEB SPLICES
ALL WELD DETAILS SHOWN ON SHEETS ST290 – ST294 AND ST283.
SEE SHEET ST295 FOR V1, V2, V3, DETAILS
LETTERS IN HEXAGON INDICATE WELD DETAILS i.e. (A)
LETTERS AND NUMBERS IN SQUARES INDICATE RESISTANCE WELD STRENGTH IDENTIFIED IN THE QUALITY CONTROL PROGRAM i.e. [R1]

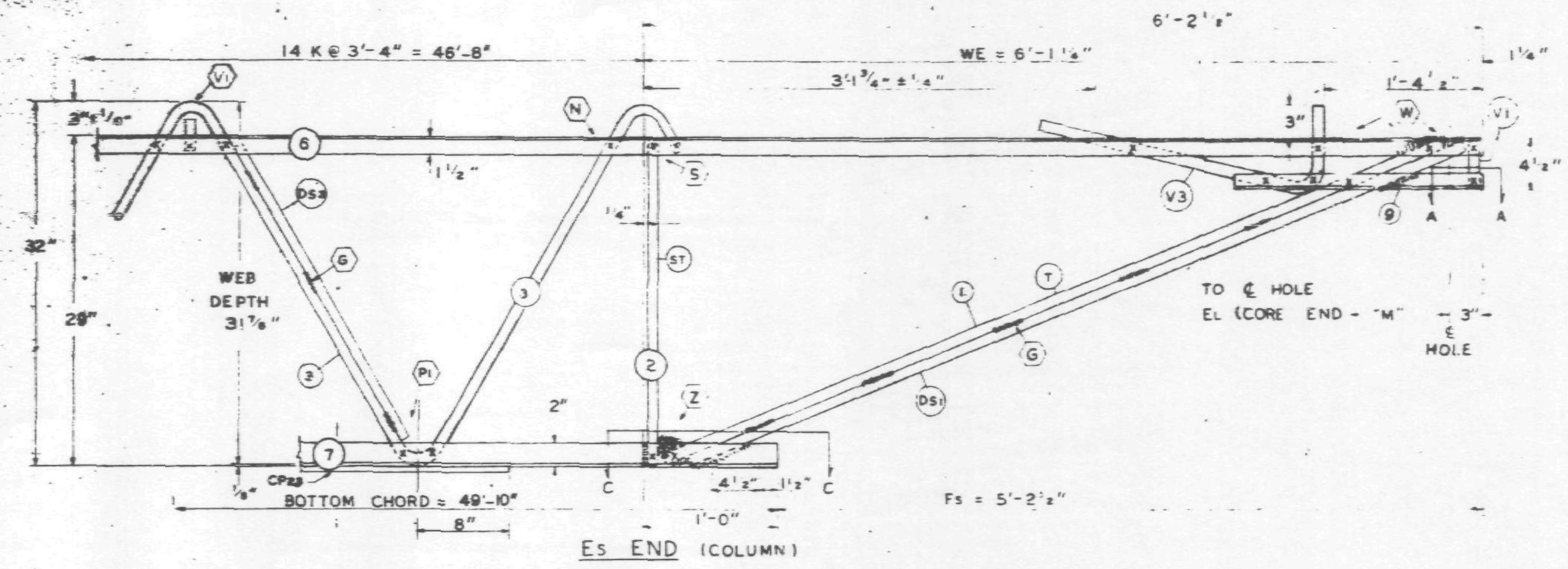

Es END (COLUMN)

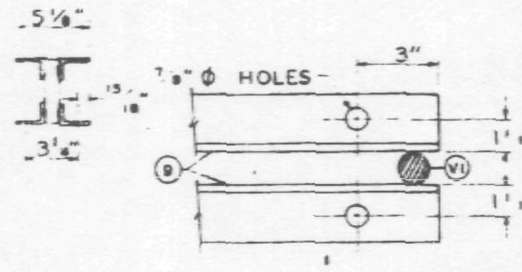

SECTION A-A

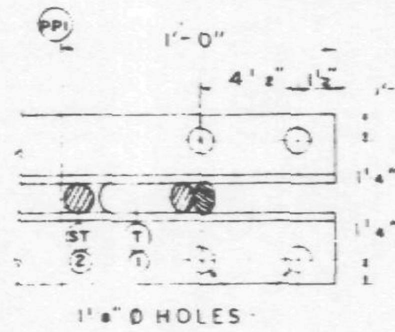

SECTION C-C

DAMPING UNIT CONNECTION PLATE ATTACHED TO BOTTOM CHORD (COL-END) IN FIELD. ASSEMBLY BY OTHERS

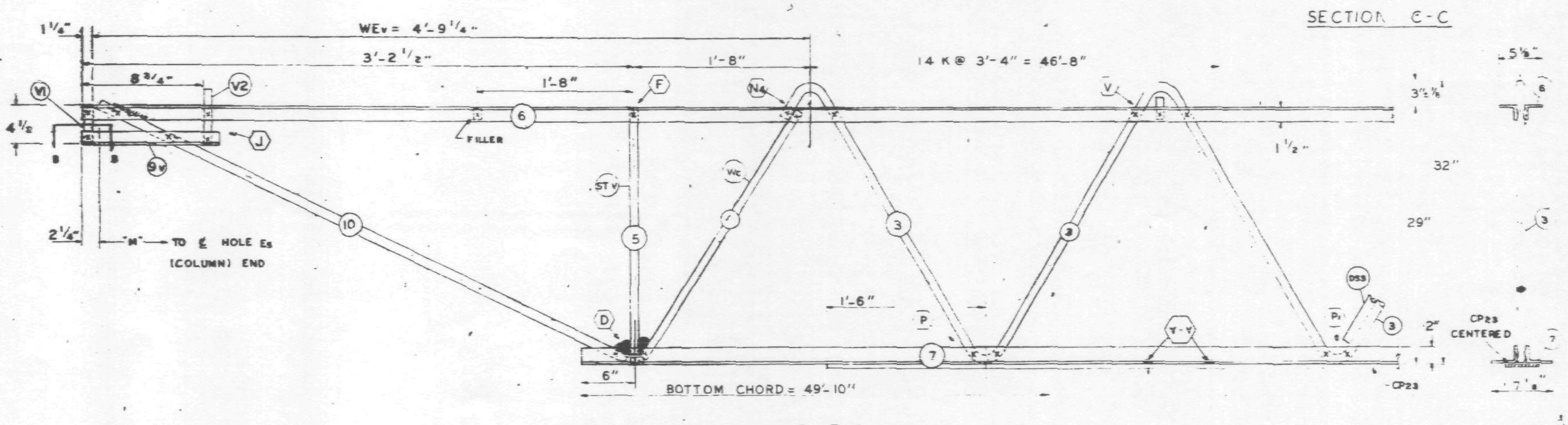

EL END (CORE)

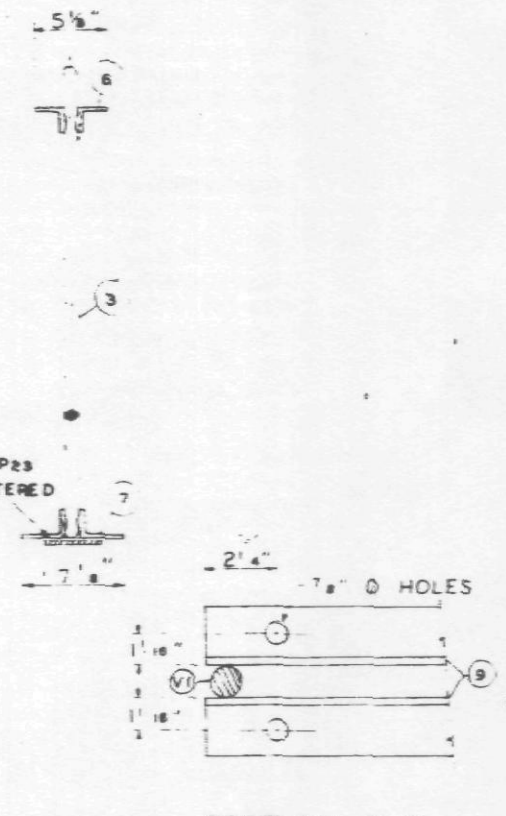

SECTION B-B

NO.	DATE	REVISION	BY
1	2-18-69	BEARING ANGLE SIZE & CON. FILLERS	LWH

REF DRWG.

7-AB1-26	1-8-[illegible]
7-AB4-50	[illegible]-1-[illegible]
7-AB3-41	1-6-69
7-AB1-53	7-22-68

PAINT
LACLEDE ELECTROCOAT
RED NO. 10001

TRUSS DESIGNATION	TOP CHORD TWO ANGLES				BOTTOM CHORD TWO ANGLES				MAIN WEB "W"					FILLER		"M" c-c HOLES	CONNECTION FILLERS ⚠1			CHORD PLATE			
	MK.	TYPE STEEL	CHORD SIZE	LENGTH	MK.	TYPE STEEL	CHORD SIZE	LENGTH	MK.	TYPE STEEL	DIA.	LENGTH	NO. OF K	NO.	DIA.		NO	DIA.	LENGTH	MK	TYPE STEEL	SIZE	LENGTH
C32T29N-579	6	A242	2"x1 1/2"x.37	57'-9"	7	A36	3"x2"x 37	49'-10"	3	A242	1.14	88'-1 1/4"	14 @ 3'-4" = 46'-8"	11	.14	57'-3 3/4"	4	1.14	3"	CP 23	A36	4 1/2"x.39	45'-6"

COLUMN END

Es END	TRUSS DESIGNATION	BEARING ANGLES ⚠1				WE	DIAGONAL "T" STRUT				VERTICAL "ST" STRUT				END STIFFENER MK. V1			END STIFFENER [illegible]			DOUBLE STRUT			
		MK.	TYPE STEEL	CHORD SIZE	LENGTH		MK	TYPE STEEL	DIA	LENGTH	MK.	TYPE STEEL	DIA.	LENGTH	TYPE STEEL	DIA.	LENGTH	TYPE STEEL	[illegible]	[illegible]GTH	MK	TYPE STEEL	DIA	LGTH.
	C32T29N-579	9	A242	2"x1 1/2"x.37	2'-3"	6'-1 1/4"	1	A242	1.14	6'-3 1/8"	2	A242	1.14	2'-4 7/8"	A242	1.14	4 3/8"	A242	1.14	2'-9 1/2"	DS1	A242	.92	6'-3 1/8"

CHECK DIMENSION FOR TRUSS FAB.

LOCATION OF TRANS TRUSS				
CL-1	CL-2	CL-3	CL-4	Fs
9'-6 1/2"	22'-10 1/2"	36'-2 1/2"	49'-6 1/2"	5'-2 1/2"

CORE END

EL END	TRUSS DESIGNATION	BEARING ANGLES ⚠1				WEv	DIAGONAL "Tv" STRUT				VERTICAL "STv" STRUT				END STIFFENER MK. V1			END STIFFENER MK. V2			END STIFFENER MK. V4			WEB "Wc"					DOUBLE STRUT				DOUBLE STRUT				(2) DOUBLE STRUT (REQ'D)			
		MK.	TYPE STEEL	CHORD SIZE	LENGTH		MK	TYPE STEEL	DIA	LENGTH	MK.	TYPE STEEL	DIA.	LENGTH	TYPE STEEL	DIA.	LENGTH	TYPE STEEL	DIA.	LENGTH	TYPE STEEL	DIA.	LENGTH	MK	TYPE STEEL	PCS	DIA	LENGTH	MK.	TYPE STEEL	PCS	LENGTH	MK	TYPE STEEL	DIA	LENGTH	MK	TYPE STEEL	DIA	LENGTH
	C32T29N579	9	A242	2"x1 1/2"x.37	10 1/2"	4'-9 1/4"	10	A242	1.14	3-10"	5	A242	1.14	2'-4 7/8"	A242	1.14	4 3/8"	A242	1.14	7 5/8"	-	—	—	4	A242	1	1.14	2'-9 1/2"	-	—	—	—	—	—	-	—	DS3	A242	.75	2'-6 3/4"

STEEL TRUSS DETAILS
FOR
WORLD TRADE CENTER - N.Y.C.
FOR
THE PORT OF NEW YORK AUTHORITY

FLOOR TRUSS C32T29N 57'-9" OVERALL
WORLD TRADE CENTER TOWERS A&B

FABRICATION BY: LACLEDE STEEL COMPANY

FABRICATED AT: MADISON, ILLINOIS		DESIGN DRAWING NO. 7-AB1-26	PLATE
APPROVED FOR FABRICATION BY: [signature] FOR P.O.N.Y.A.	DATE 2/24/69	DRAWN BY: [illegible] DATE: JAN 20 1969	
APPROVED FOR FABRICATION BY: FOR FABRICATOR LACLEDE STEEL CO.	DATE.	CHECKED BY: [illegible] DATE: JAN 21, 1969	IN CHARGE OF PROJ. [illegible]
DETAILED BY: A.C. WEBER		FABRICATION CONT. NO. W.T.C. 221	SHEET NO. [illegible]

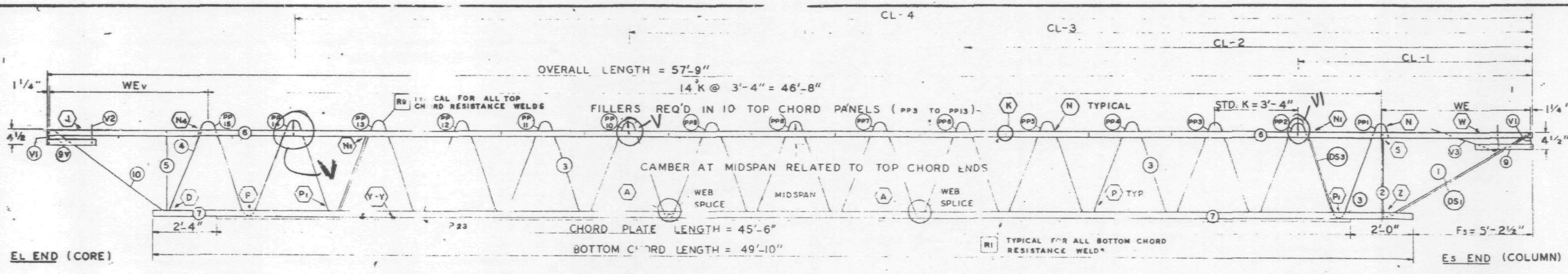

TRUSS ELEVATION

FABRICATION REQUIRMENTS		
	DESIGN	TOLERANCE
CAMBER AT MIDSPAN	1 7/8"	± 3/8"
DESIGN DEPTH	29"	± 1/4"
PANEL "K"	3'-4"	1/4"
OVERALL LENGTH	57'-9"	± 3/8"
WEB DEPTH	31 7/8"	± 1/4"

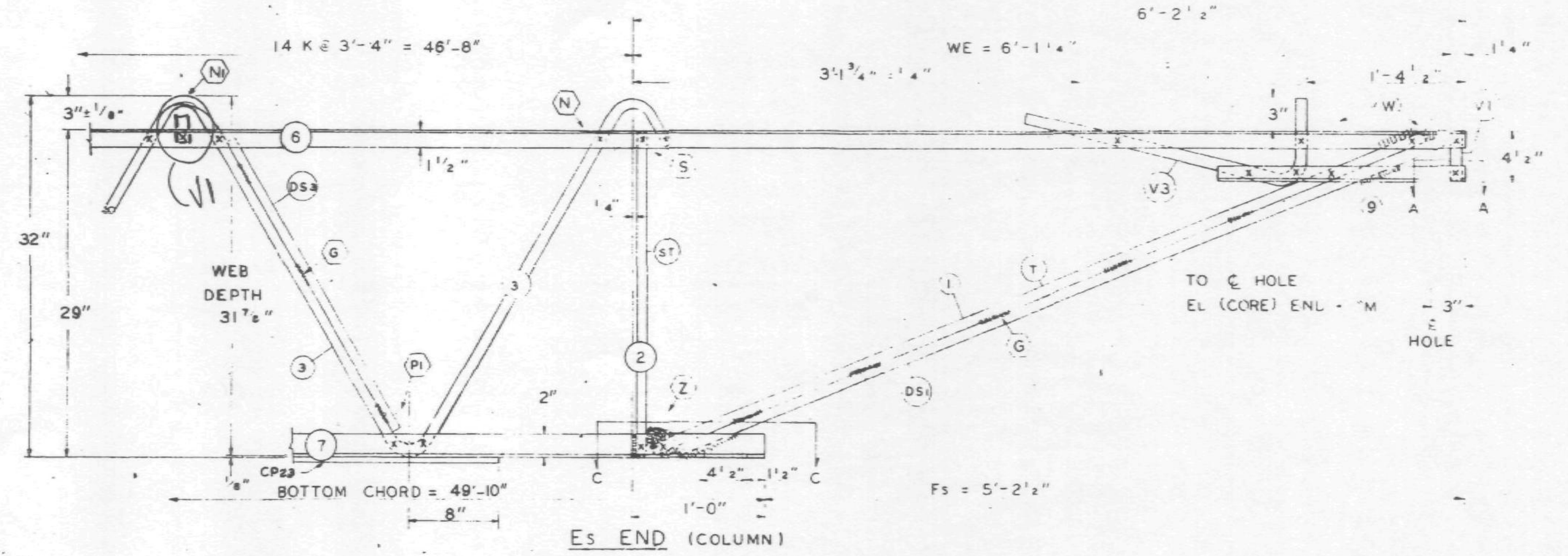

Es END (COLUMN)

ALL PANEL POINTS RESISTANCE WELDED (X)
ARC WELDS INDICATED AT SHADED AREAS AND AT BOTTOM CHORD WEB SPLICES
ALL WELD DETAILS SHOWN ON SHEETS ST290 – ST294 AND ST287.
SEE SHEET ST295 FOR V1, V2, V3, DETAILS
LETTERS IN HEXAGON INDICATE WELD DETAILS ie. (A)
LETTERS AND NUMBERS IN SQUARES INDICATE RESISTANCE WELD STRENGTH IDENTIFIED IN THE QUALITY CONTROL PROGRAM, ie., [R1]

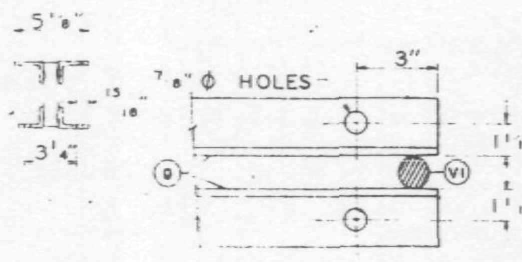

SECTION A-A

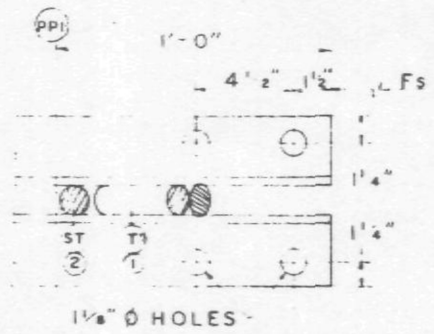

SECTION C-C

DAMPING UNIT CONNECTION PLATE ATTACHED TO BOTTOM CHORD (COL. END) IN FIELD. ASSEMBLY BY OTHERS.

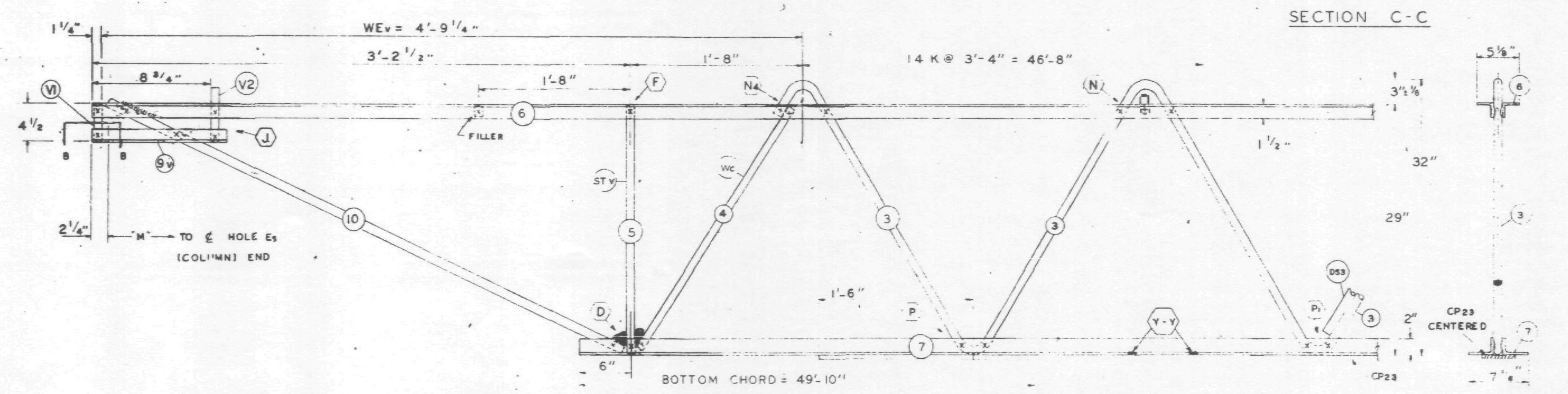

EL END (CORE)

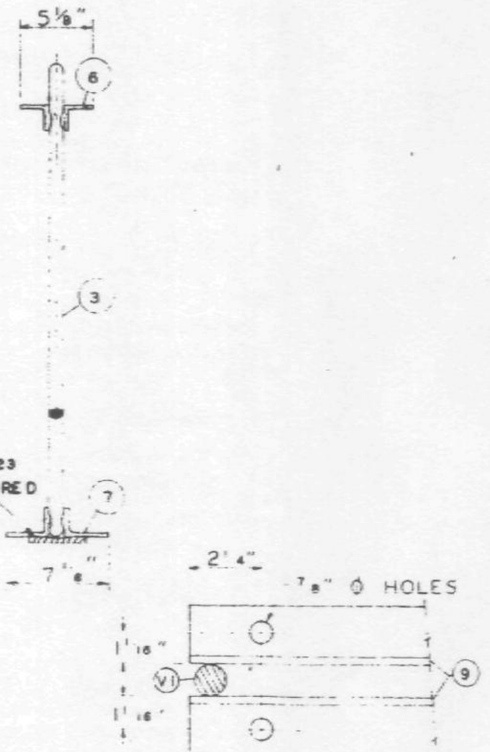

SECTION B-B

REF DRWG.

7-AB1-26	1-6-69
7-AB4-50	8-1-68
7-AB3-41	1-6-69
7-AB1-53	7-22-68

PAINT
LACLEDE ELECTROCOAT
RED NO. 10001

TRUSS DESIGNATION	TOP CHORD TWO ANGLES				BOTTOM CHORD TWO ANGLES				MAIN WEB "W"					FILLER		"M" ℄ HOLES	CONNECTION FILLERS			CHORD PLATE			
	MK	TYPE STEEL	CHORD SIZE	LENGTH	MK	TYPE STEEL	CHORD SIZE	LENGTH	MK	TYPE STEEL	DIA	LENGTH	NO OF K	NO	DIA		NO	DIA	LENGTH	MK	TYPE STEEL	SIZE	LENGTH
C32T29-579	6	A242	2"x1 1/2"x.37	57'-9"	7	A36	3"x2"x.37	49'-10"	3	A242	1.14	88'-1 1/4"	14 @ 3'-4" = 46'-8"	11	1.14	57'-3 3/4"	⊖ 4	⊖ 1.14	⊖ 3	CP23	A36	4 1/2"x.39	45'-6"

COLUMN END

Es END	TRUSS DESIGNATION	BEARING ANGLES				WE	DIAGONAL "T" STRUT				VERTICAL "ST" STRUT				END STIFFENER MK V1			END STIFFENER MK V3			DOUBLE STRUT			
		MK	TYPE STEEL	CHORD SIZE	LENGTH		MK	TYPE STEEL	DIA	LENGTH	MK	TYPE STEEL	DIA	LENGTH	TYPE STEEL	DIA	LENGTH	TYPE STEEL	DIA	LENGTH	MK	TYPE STEEL	DIA	LGTH
	C32T29N-579	9	A242	2"x1 1/2"x.25 (.37)	2'-3"	6'-1 1/4"	1	A242	1.14	6'-3 1/8"	2	A242	1.14	2'-4 7/8"	A242	1.14	4 3/8"	A242	1.14	2'-9 1/2"	DS1	A242	.92	6'-3 1/8"

CHECK DIMENSION FOR TRUSS FAB. LOCATION OF TRANS. TRUSS				
CL-1	CL-2	CL-3	CL-4	Fs
9'-6 1/2"	22'-10 1/2"	36'-2 1/2"	49'-6 1/2"	5'-2 1/2"

2/19/69 SK

CORE END

EL END	TRUSS DESIGNATION	BEARING ANGLES				WEv	DIAGONAL "Tv" STRUT				VERTICAL "STv" STRUT				END STIFFENER MK V1			END STIFFENER V2			END STIFFENER MK V4			WEB "Wc"					DOUBLE STRUT				DOUBLE STRUT				(2) (REQ'D) DOUBLE STRUT			
		MK	TYPE STEEL	CHORD SIZE	LENGTH		MK	TYPE STEEL	DIA	LENGTH	MK	TYPE STEEL	DIA	LENGTH	TYPE STEEL	DIA	LENGTH	TYPE STEEL	DIA	LENGTH	TYPE STEEL	DIA	LENGTH	MK	TYPE STEEL	PCS	DIA	LENGTH	MK	TYPE STEEL	PCS	LENGTH	MK	TYPE STEEL	DIA	LENGTH	MK	TYPE STEEL	DIA	LENGTH
	C32T29N579	9	A242	2"x1 1/2"x.25 (.37)	10 1/2"	4'-9 1/4"	10	A242	1.14	3'-10"	5	A242	1.14	2'-4 7/8"	A242	1.14	4 3/8"	A242	1.14	7 3/8"	–	–	–	4	A242	1	1.14	2'-9 1/2"	–	–	–	–	–	–	–	–	DS3	A242	.75	2'-6 3/4"

STEEL TRUSS DETAILS
FOR
WORLD TRADE CENTER - N.Y.C.
FOR
THE PORT OF NEW YORK AUTHORITY

FLOOR TRUSS C32T29N 57'-9" OVERALL
WORLD TRADE CENTER TOWERS A & B

FABRICATION BY: LACLEDE STEEL COMPANY			
FABRICATED AT: MADISON, ILLINOIS		DESIGN DRAWING NO. 7-AB1-26	PLATE
APPROVED FOR FABRICATION BY: ____ FOR P.O.N.Y.A.	DATE	DRAWN BY: L.R. DATE: JAN 20 1969	
APPROVED FOR FABRICATION BY A.C. WEBER FOR FABRICATOR	DATE.	CHECKED BY: T.M.CHURA DATE JAN 21, 1969	IN CHARGE OF PROD. DEV.
DETAILED BY A.C. WEBER		FABRICATION CONT. NO. W.T.C. 221	SHEET NO. ST229N

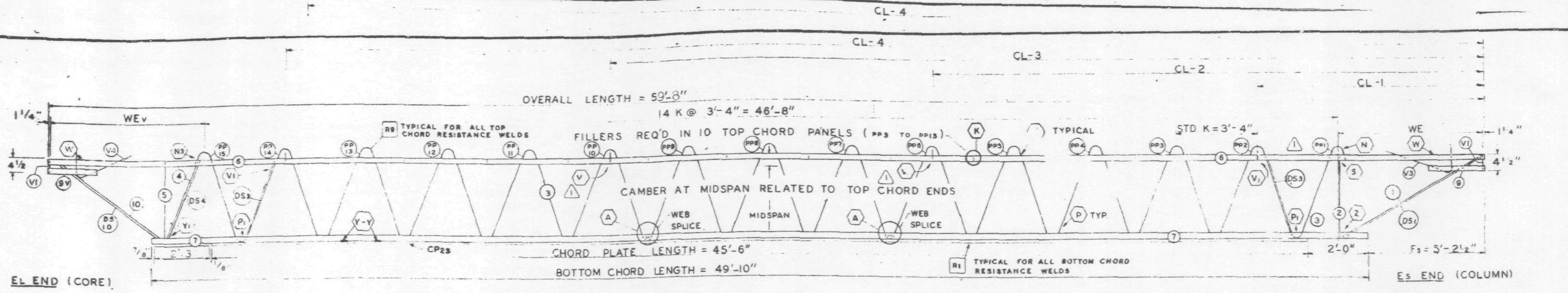

TRUSS ELEVATION

FABRICATION REQUIRMENTS	DESIGN	TOLERANCE
CAMBER AT MIDSPAN	1 7/8"	± 3/8"
DESIGN DEPTH	29"	± 1/4"
PANEL "K"	3'-4"	± 1/4"
OVERALL LENGTH	59'-8"	± 3/8"
WEB DEPTH	31 7/8"	± 1/4"

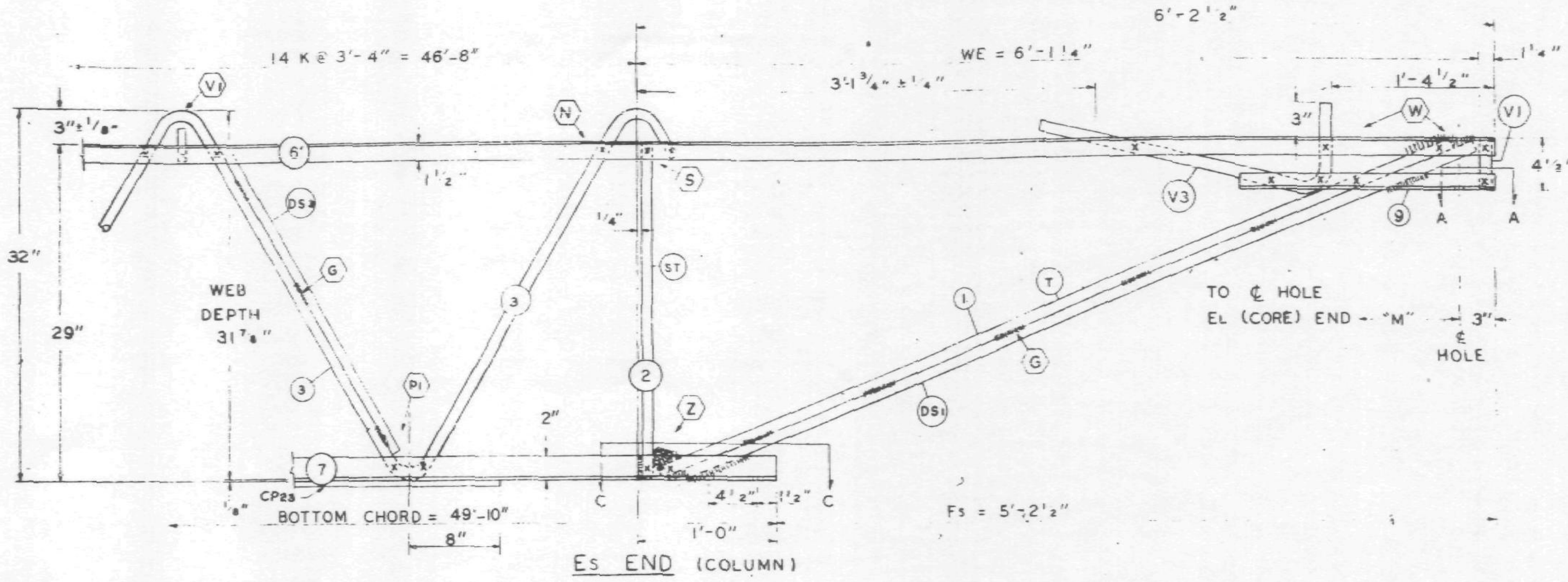

Es END (COLUMN)

ALL PANEL POINTS RESISTANCE WELDED (X)
ARC WELDS INDICATED AT SHADED AREAS AND AT BOTTOM CHORD WEB SPLICES
ALL WELD DETAILS SHOWN ON SHEETS ST290 - ST294 AND ST286.
SEE SHEET ST295 FOR V1, V2, V3, DETAILS
LETTERS IN HEXAGON INDICATE WELD DETAILS ie. A
LETTERS AND NUMBERS IN SQUARES INDICATE RESISTANCE WELD STRENGTH IDENTIFIED IN THE QUALITY CONTROL PROGRAM. ie. R1

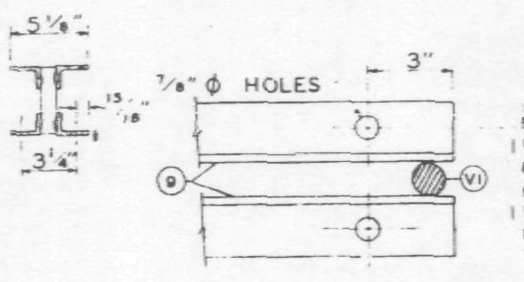

SECTION A-A

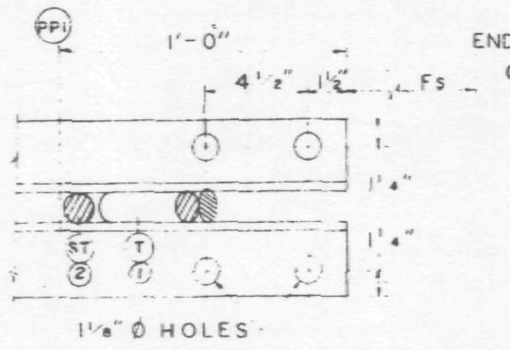

SECTION C-C

DAMPING UNIT CONNECTION PLATE ATTACHED TO BOTTOM CHORD (COL END) IN FIELD. ASSEMBLY BY OTHERS.

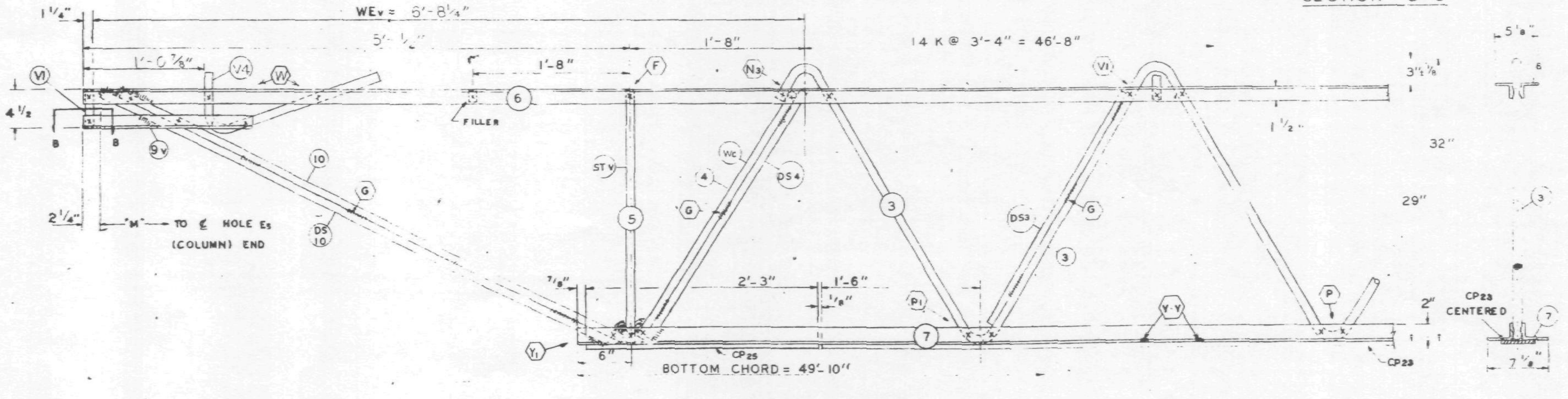

EL END (CORE)

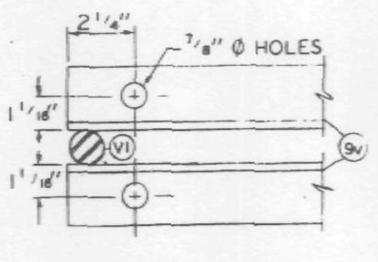

SECTION B-B

1	6-16-69	AS NOTED	G.D.C.
NO	DATE	REVISION	BY

REF DRWG.

7-AB1-27	1-6-69
7-AB4-50	8-1-68
7-AB3-41	1-6-69
7-AB1-53	7-22-68

PAINT
LACLEDE ELECTROCOAT
RED NO. 10001

TRUSS DESIGNATION	TOP CHORD TWO ANGLES MK.	TYPE STEEL	CHORD SIZE	LENGTH	BOTTOM CHORD TWO ANGLES MK.	TYPE STEEL	CHORD SIZE	LENGTH	MAIN WEB "W" MK.	TYPE STEEL	DIA.	LENGTH	NO. OF K	FILLER NO.	DIA.	"M" C/C HOLES	CONNECTION FILLERS NO	DIA.	LENGTH	CHORD PLATE MK	TYPE STEEL	SIZE	LENGTH	REINFORCING ANGLE MK.	TYPE STEEL	ANGLE SIZE	LENGTH	CHORD PLATE MK.	TYPE STEEL	SIZE	LENGTH
C32T30C598	6	A242	2"x1½"x.37	53'-6"	7	A36	3"x2"x.37	49'-10"	3	A242	1.14	88'-1¼"	14 @ 3'-4" = 46'-8"	11	1.14	9'-2¾	4	1.14	0'-3"	CP23	A36	4½"x.39	45'-6"	—	—	—	—	CP25	A36	4½" x .39"	2'-3"

COLUMN END — Es END

TRUSS DESIGNATION	BEARING ANGLES MK	TYPE STEEL	CHORD SIZE	LENGTH	WE	DIAGONAL "T" STRUT MK	TYPE STEEL	DIA	LENGTH	VERTICAL "ST" STRUT MK	TYPE STEEL	DIA.	LENGTH	END STIFFENER MK. V1 TYPE STEEL	DIA.	LENGTH	MK. V3 TYPE STEEL	DIA.	LENGTH	DOUBLE STRUT MK	TYPE STEEL	DIA	LGTH.
C32T30C598	9	A242	2"x1½"x.37	2'-3"	6'-1¼"	1	A242	1.14	6'-3⅛"	2	A242	1.14	2'-4⅞"	A242	1.14	4⅜"	A242	1.14	2'-9½"	DS1	A242	.92	6'-3⅛"

CHECK DIMENSION FOR TRUSS FAB. LOCATION OF TRANS. TRUSS CL-1	CL-2	CL-3	CL-4	Fs
9'-6½"	22'-10½"	36'-2½"	49'-6"	5'-2½"

CORE END — EL END

TRUSS DESIGNATION	BEARING ANGLES MK.	TYPE STEEL	CHORD SIZE	LENGTH	WEv	DIAGONAL "Tv" STRUT MK.	TYPE STEEL	DIA	LENGTH	VERTICAL "STv" STRUT MK.	TYPE STEEL	DIA.	LENGTH	END STIFFENER MK. V1 TYPE STEEL	DIA.	LENGTH	MK. V2 TYPE STEEL	DIA.	LENGTH	MK. V4 TYPE STEEL	DIA.	LENGTH	WEB "Wc" MK	TYPE STEEL	PCS	DIA	LENGTH	DOUBLE STRUT MK.	TYPE STEEL	DIA	LENGTH	DOUBLE STRUT MK	TYPE STEEL	DIA	LENGTH	(2) DOUBLE STRUT (RECD) MK	TYPE STEEL	DIA	LENGTH
C32T30C598	9	A242	2"x1½"x.37	1'-6"	6'-8¼	10	A242	1.14	5'-4¼	5	A242	1.14	2'-4⅞"	A242	1.14	4⅜				A242	1.14	2'-2½"	4	A242	1	1.14	2'	DS4	A242	.75	2'-9⅝	[illegible]	A242	.32	5'-4¼	[illegible]	A242	.75	2'-6¾"

STEEL TRUSS DETAILS
FOR
WORLD TRADE CENTER - N.Y.C.
FOR
THE PORT OF NEW YORK AUTHORITY

FLOOR TRUSS C32T30C 59'-8" OVERALL
WORLD TRADE CENTER TOWERS A & B

FABRICATION BY: LACLEDE STEEL COMPANY

FABRICATED AT: MADISON, ILLINOIS		DESIGN DRAWING NO. 7-AB1-27	PLATE
APPROVED FOR FABRICATION [signature] FOR P.O.N.Y.A.	DATE 7/22/69	DRAWN BY: [illegible] DATE: APRIL 29, 1969	
APPROVED FOR FABRICATION BY: LACLEDE STEEL CO. FOR FABRICATOR	DATE. 1	CHECKED BY: [illegible] DATE: APRIL 29, 1969	IN CHARGE OF PROD. DEV.
DETAILED BY: A.C. WEBER		FABRICATION CONT. NO. W.T.C. 221	SHEET NO. ST230C

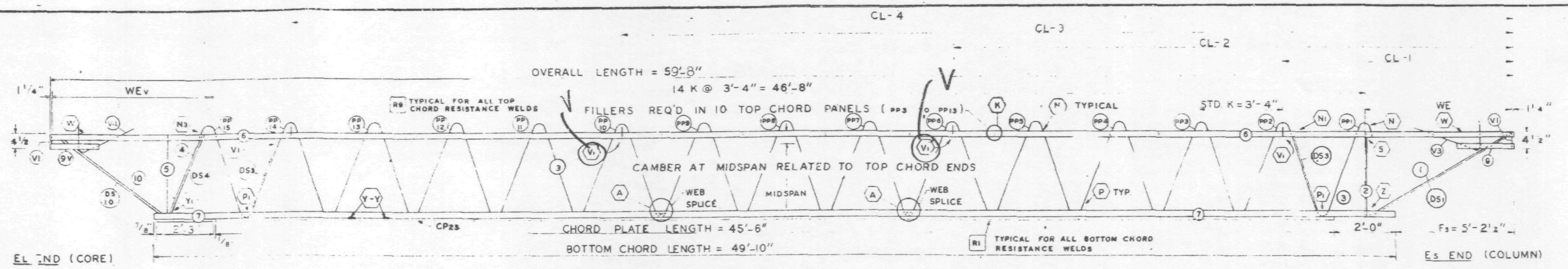

TRUSS ELEVATION

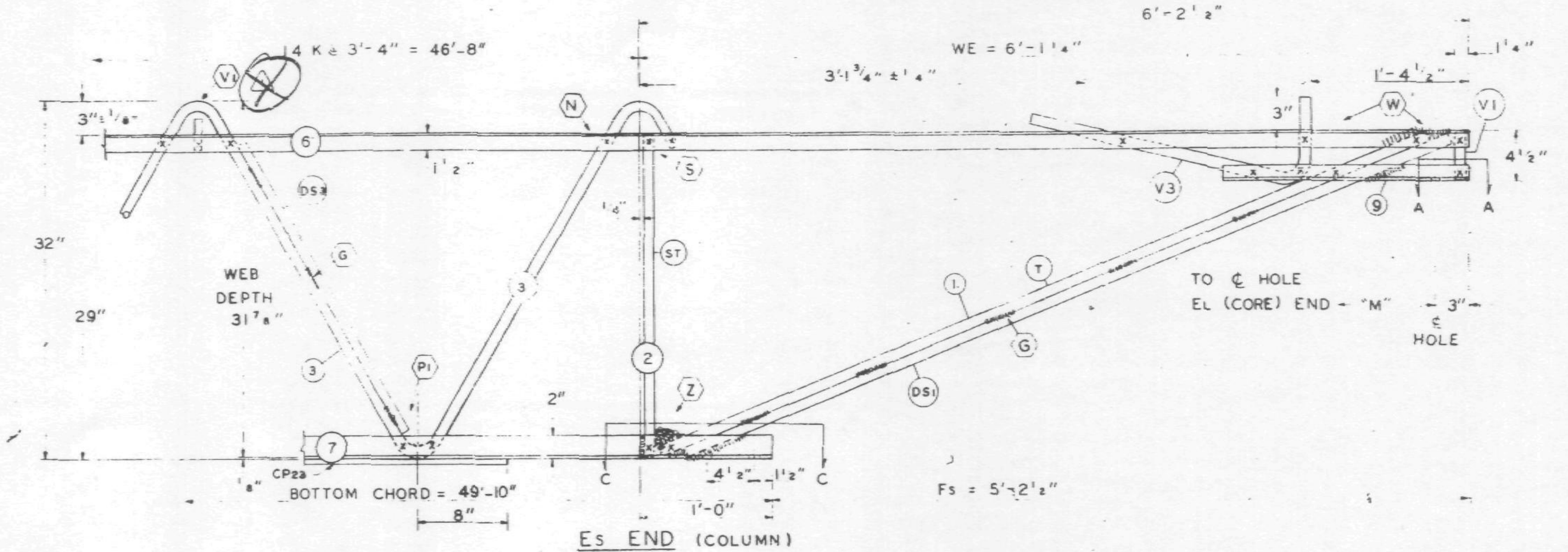

Es END (COLUMN)

ALL PANEL POINTS RESISTANCE WELDED (X)
ARC WELDS INDICATED AT SHADED AREAS AND AT BOTTOM CHORD WEB SPLICES
ALL WELD DETAILS SHOWN ON SHEETS ST290 - ST294 AND ST286.
SEE SHEET ST295 FOR V1, V2, V3. DETAILS
LETTERS IN HEXAGON INDICATE WELD DETAILS i.e. (A)
LETTERS AND NUMBERS IN SQUARES INDICATE RESISTANCE WELD STRENGTH IDENTIFIED IN THE QUALITY CONTROL PROGRAM i.e. [R1]

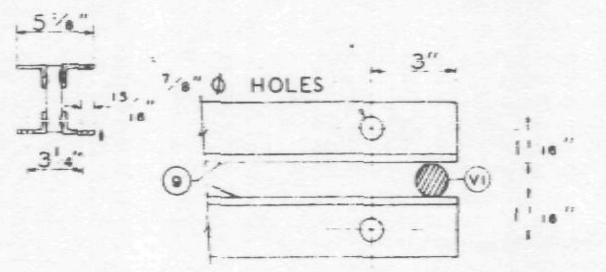

SECTION A-A

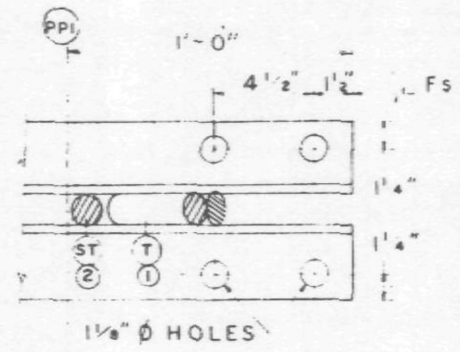

SECTION C-C

DAMPING UNIT CONNECTION PLATE ATTACHED TO BOTTOM CHORD (COL. END) IN FIELD. ASSEMBLY BY OTHERS.

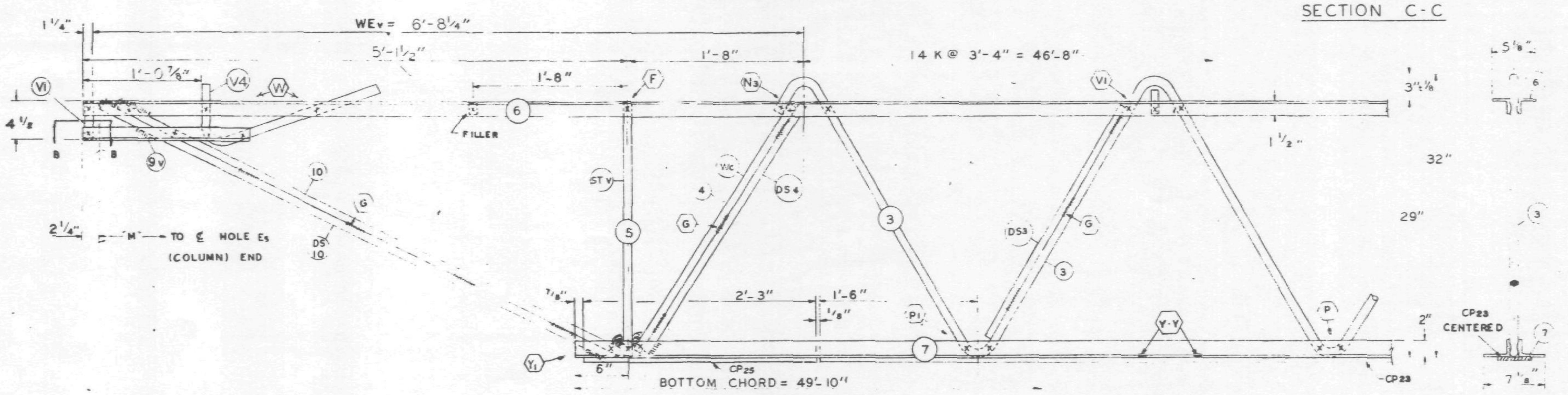

EL END (CORE)

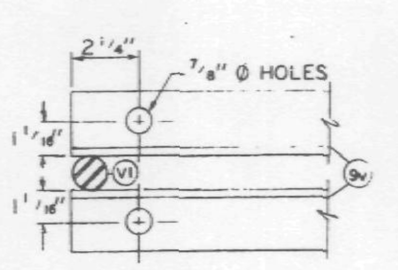

SECTION B-B

FABRICATION REQUIRMENTS	DESIGN	TOLERANCE
CAMBER AT MIDSPAN	1 7/8"	± 3/8"
DESIGN DEPTH	29"	± 1/4"
PANEL "K"	3'-4"	± 1/4"
OVERALL LENGTH	59'-8"	± 3/8"
WEB DEPTH	31 7/8"	± 1/4"

NO	DATE	REVISION	BY

REF DRWG.

7-A81-27	1-6-69
7-A84-50	8-1-68
7-A83-41	1-6-69
7-A81-53	7-22-68

SKILLING - HELLE - CHRISTIANSEN - ROBERTSON Structural & Civil Engineers
APPROVED / APPROVED AS NOTED / RESUBMIT / REJECTED
6/4/69 SK

PAINT
LACLEDE ELECTROCOAT
RED NO. 10001

TRUSS DESIGNATION		TOP CHORD TWO ANGLES			BOTTOM CHORD TWO ANGLES				MAIN WEB "W"					FILLER		"M" C/C HOLES	CONNECTION FILLERS			CHORD PLATE				REINFORCING ANGLE				CHORD PLATE			
		TYPE STEEL	CHORD SIZE	LENGTH	MK.	TYPE STEEL	CHORD SIZE	LENGTH	MK.	TYPE STEEL	DIA.	LENGTH	NO. OF X	NO.	DIA.		NO	DIA.	LENGTH	MK	TYPE STEEL	SIZE	LENGTH	MK.	TYPE STEEL	ANGLE SIZE	LENGTH	MK.	TYPE STEEL	SIZE	LENGTH
C32T30C598	6	A242	2"x1½"x.37	59'-6"	7	A36	3"x2"x.37	49'-10"	3	A242	1.14	88'-1¼"	14 @ 3'-4" = 46'-8"	11	1.14	59'-2¾"	4	1.14	0'-3"	CP 23	A36	4½"x.39	45'-6"	—	—	—	—	CP 25	A36	4½" x .39"	2'-3"

COLUMN END

Es END	TRUSS DESIGNATION	BEARING ANGLES				WE	DIAGONAL "T" STRUT				VERTICAL "ST" STRUT				END STIFFENER MK. V1			END STIFFENER MK. V3			DOUBLE STRUT			
		MK.	TYPE STEEL	CHORD SIZE	LENGTH		MK	TYPE STEEL	DIA	LENGTH	MK.	TYPE STEEL	DIA.	LENGTH	TYPE STEEL	DIA.	LENGTH	TYPE STEEL	DIA.	LENGTH	MK	TYPE STEEL	DIA	LGTH.
	C32T30C598	9	A242	2"x1½"x.37	2'-8"	6'-1¼"	1	A242	1.14	6'-3⅛"	2	A242	1.14	2'-4⅞"	A242	1.14	4⅜"	A242	1.14	2'-9½"	DS 1	A242	.92	6'-3⅛"

CHECK DIMENSION FOR TRUSS FAB.

LOCATION OF TRANS. TRUSS				
CL-1	CL-2	CL-3	CL-4	Fs
9'-6½"	22'-10½"	36'-2½"	49'-6½"	2½"

CORE END

EL END	TRUSS DESIGNATION	BEARING ANGLES				WEv	DIAGONAL "Tv" STRUT				VERTICAL "STv" STRUT				END STIFFENER MK. V1			END STIFFENER MK. V2			END STIFFENER MK. V4		
		MK.	TYPE STEEL	CHORD SIZE	LENGTH		MK.	TYPE STEEL	DIA	LENGTH	MK.	TYPE STEEL	DIA.	LENGTH	TYPE STEEL	DIA.	LENGTH	TYPE STEEL	DIA.	LENGTH	TYPE STEEL	DIA.	LENGTH
	C32T30C598	9	A242	2"x1½"x.37	1'-6"	6'-8¼"	10	A242	1.14	5'-4¼"	5	A242	1.14	2'-4⅞"	A242	1.14	4⅜"				A242	1.14	2'-2½"

TRUSS DESIGNATION	WEB "Wc"					DOUBLE STRUT				DOUBLE STRUT				(2) DOUBLE STRUT (REQ'D)		
	MK	TYPE STEEL	PCS	DIA	LENGTH	MK	TYPE STEEL	DIA	LENGTH	MK	TYPE STEEL	DIA	LENGTH	MK	TYPE STEEL	LENGTH
C32T30C598	4	A242	1	1.14	2'-9½"	DS 4	A242	.75	2'-9½"	DS 10	A242	.92	5'-4¼"	DS 3	A242 .75	2'-6¾"

STEEL TRUSS DETAILS
FOR
WORLD TRADE CENTER - N.Y.C.
FOR
THE PORT OF NEW YORK AUTHORITY

FLOOR TRUSS C32T30C 59'-8" OVERALL
WORLD TRADE CENTER TOWERS A & B

FABRICATION BY: LACLEDE STEEL COMPANY

FABRICATED AT: MADISON, ILLINOIS		DESIGN DRAWING NO. 7-A81-27	PLATE
APPROVED FOR FABRICATION BY: ______ FOR P.O.N.Y.A.	DATE	DRAWN BY: L.S. DATE: APRIL 29, 1969	
APPROVED FOR FABRICATION BY: ______ FOR FABRICATOR	DATE.	CHECKED BY: T.M.GHIRA DATE: APRIL 29, 1969	IN CHARGE OF PROD. DEV.
DETAILED BY: A.C. WEBER		FABRICATION CONT. NO. W.T.C. 221	SHEET NO. ST230C

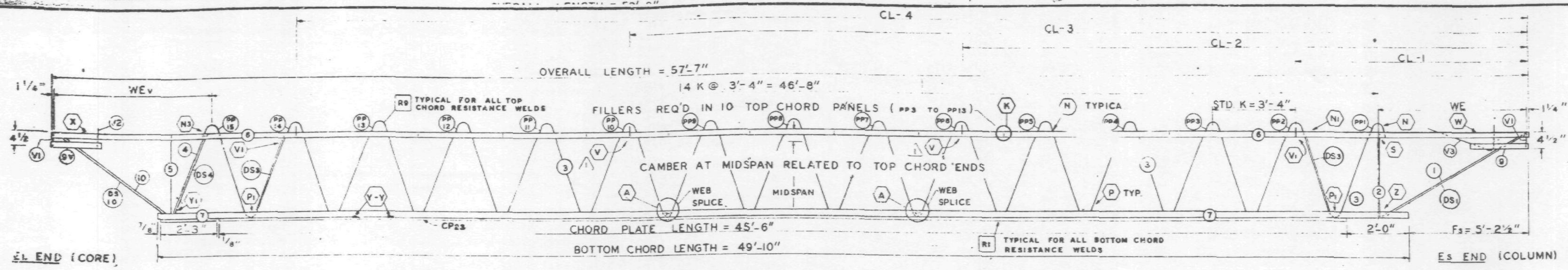

TRUSS ELEVATION

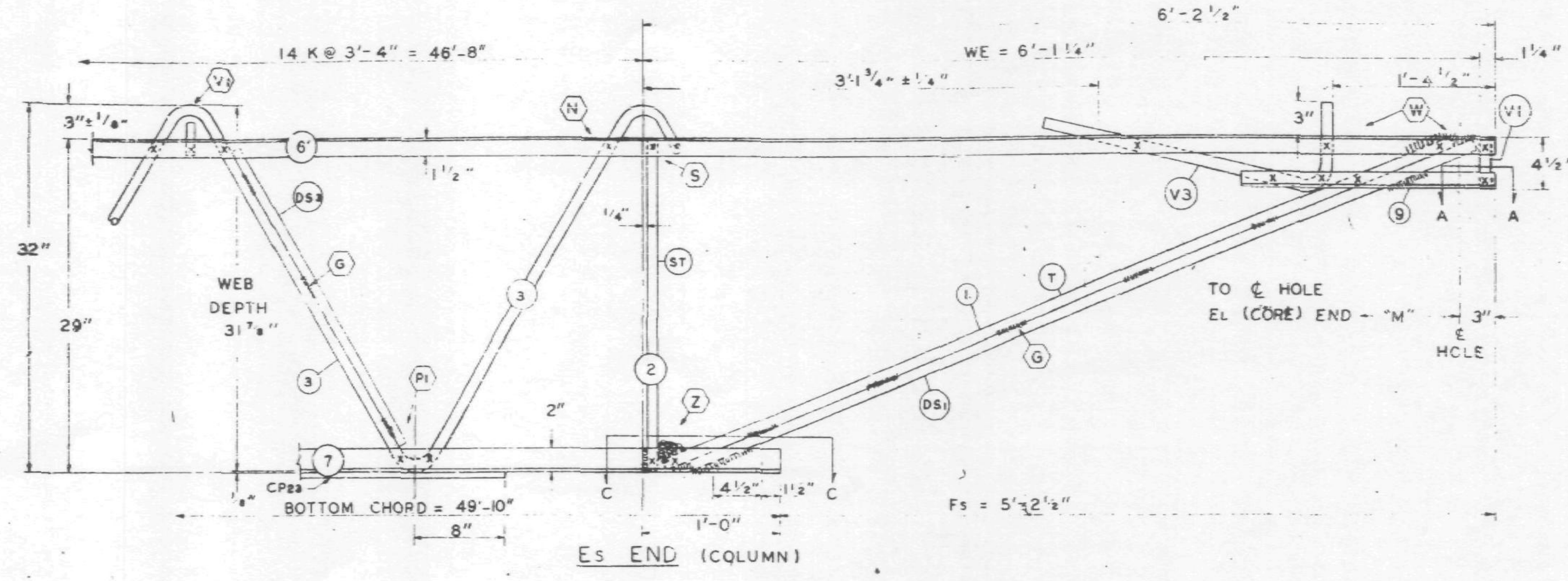

ES END (COLUMN)

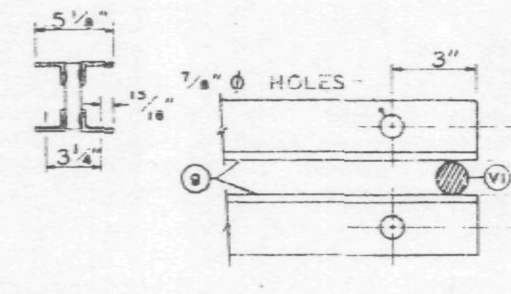

SECTION A-A

ALL PANEL POINTS RESISTANCE WELDED (X)
ARC WELDS INDICATED AT SHADED AREAS AND AT BOTTOM CHORD WEB SPLICES
ALL WELD DETAILS SHOWN ON SHEETS ST290 - ST294 AND ST286.
SEE SHEET ST295 FOR V1, V2, V3, DETAILS
LETTERS IN HEXAGON INDICATE WELD DETAILS i.e. (A)
LETTERS AND NUMBERS IN SQUARES INDICATE RESISTANCE WELD STRENGTH IDENTIFIED IN THE QUALITY CONTROL PROGRAM, i.e. [R1]

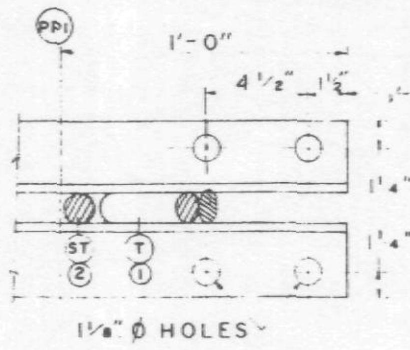

SECTION C-C

DAMPING UNIT CONNECTION PLATE ATTACHED TO BOTTOM CHORD (COL. END) IN FIELD. ASSEMBLY BY OTHERS.

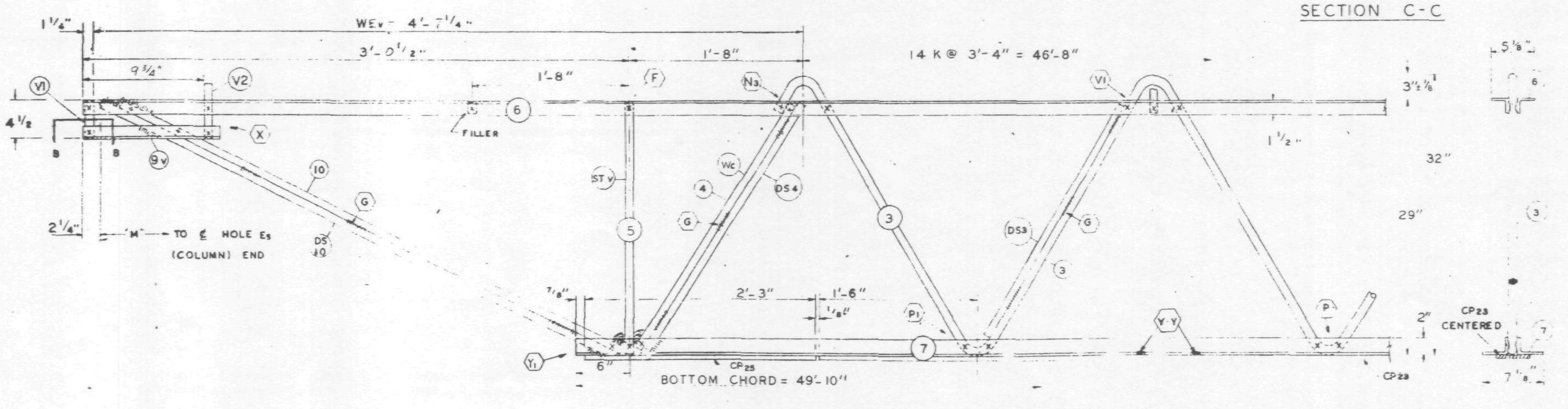

EL END (CORE)

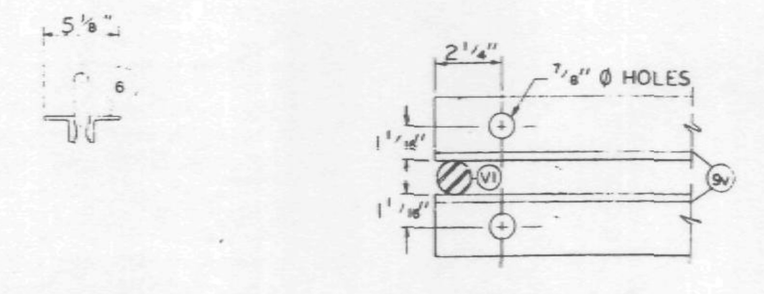

SECTION B-B

FABRICATION REQUIRMENTS	DESIGN	TOLERANCE
CAMBER AT MIDSPAN	1 7/8"	± 3/8"
DESIGN DEPTH	29"	± 1/4"
PANEL "K"	3'-4"	± 1/4"
OVERALL LENGTH	57'-7"	± 3/8"
WEB DEPTH	31 7/8"	± 1/4"

NO	DATE	REVISION	
1	6-12-69	AS NOTED	G.D.C.
			BY

REF DRWG.

7-AB1-27	1-6-69
7-AB4-50	8-1-68
7-AB3-41	1-6-69
7-AB1-53	7-22-68

PAINT
LACLEDE ELECTROCOAT
RED NO. 10001

TRUSS DESIGNATION	TOP CHORD TWO ANGLES				BOTTOM CHORD TWO ANGLES				MAIN WEB "W"					FILLER		"M" C/C HOLES	CONNECTION FILLERS			CHORD PLATE				REINFORCING ANGLE				CHORD PLATE			
	MK	TYPE STEEL	CHORD SIZE	LENGTH	MK	TYPE STEEL	CHORD SIZE	LENGTH	MK	TYPE STEEL	DIA	LENGTH	NO. OF K	NO.	DIA.	⚠1	NO	DIA.	LENGTH	MK	TYPE STEEL	SIZE	LENGTH	MK	TYPE STEEL	ANGLE SIZE	LENGTH	MK	TYPE STEEL	SIZE	LENGTH
C32T30P-577	6	A242	2"x1½"x.37	57'-7"	7	A36	3"x2"x.37	49'-10"	3	A242	1.14	88'-1¼	14 @ 3'-4" = 46'-8"	11	1.14	7'-1¾"	4	1.14	0'-3"	CP 23	A36	4½"x.39	45'-6"	—	—	—	—	CP 25	A36	4½"x.39"	2' 3"

COL IN END

Es END	TRUSS DESIGNATION	BEARING ANGLES				WE	DIAGONAL "T" STRUT				VERTICAL "ST" STRUT				END STIFFENER MK. V1			END STIFFENER MK. V3			DOUBLE STRUT			
		MK	TYPE STEEL	CHORD SIZE	LENGTH		MK	TYPE STEEL	DIA	LENGTH	MK	TYPE STEEL	DIA.	LENGTH	TYPE STEEL	DIA.	LENGTH	TYPE STEEL	DIA.	LENGTH	MK	TYPE STEEL	DIA	LGTH.
	C32T30P-577	9	A242	2"x1½"x.37	2'-3"	6'-1¼"	1	A242	1.14	6'-3⅛"	2	A242	1.14	2'-4⅞"	A242	1.14	4⅜"	A242	1.14	2'-9½"	DS 1	A242	.92	6'-3⅛"

CHECK DIMENSION FOR TRUSS FAB. LOCATION OF TRANS. TRUSS				
CL-1	CL-2	CL-3	CL-4	Fs
9'-6½"	22'-10½"	36'-2½"	49'-6½"	5'-2½"

CORE END

EL END	TRUSS DESIGNATION	BEARING ANGLES				WEV	DIAGONAL "TV" STRUT				VERTICAL "STV" STRUT				END STIFFENER MK. V1			END STIFFENER MK. V2			END STIFFENER MK. V4			WEB "WC"					DOUBLE STRUT				DOUBLE STRUT				(2) DOUBLE STRUT (REQD)			
		MK	TYPE STEEL	CHORD SIZE	LENGTH		MK	TYPE STEEL	DIA	LENGTH	MK	TYPE STEEL	DIA.	LENGTH	TYPE STEEL	DIA.	LENGTH	TYPE STEEL	DIA.	LENGTH	TYPE STEEL	DIA.	LENGTH	MK	TYPE STEEL	PCS	DIA	LENGTH	MK	TYPE STEEL	DIA	LENGTH	MK	TYPE STEEL	DIA	LENGTH	MK	TYPE STEEL	DIA	LENGTH
	C32T30P-577	9	A242	2"x1½"x.37	11¾"	4'-7¼"	10	A242	1.14	3'-7"	5	A242	1.14	2'-4⅞"	A242	1.14	4⅜"	A242	1.14	7⅜"	—	—	—	4	A242	1	1.14	2	DS 4	A242	.75	2'-9½"	DS 10	A242	.92	3'-7"	DS 3	A242	.75	[illegible]-6¾"

STEEL TRUSS DETAILS
FOR
WORLD TRADE CENTER - N.Y.C.
FOR
THE PORT OF NEW YORK AUTHORITY

FLOOR TRUSS C32T30P 57'-7" OVERALL
WORLD TRADE CENTER TOWERS A & B

FABRICATION BY: LACLEDE STEEL COMPANY	
FABRICATED AT: MADISON, ILLINOIS	DESIGN DRAWING NO. 7-AB1-27 PLATE
APPROVED FOR FABRICATION BY ___ FOR P.O.N.Y.A. DATE 7/28/69	DRAWN BY: [illegible] DATE: APRIL 25, 1969
APPROVED FOR FABRICATION BY ___ FOR FABRICATOR DATE 1	CHECKED BY: [illegible] DATE: APRIL 25, 1969 IN CHARGE OF [illegible]
LACLEDE STEEL CO. DETAILED BY: A.C. WEBER	FABRICATION CONT. NO. W.T.C. 221 SHEET NO. ST230P

FABRICATION REQUIRMENTS	DESIGN	TOLERANCE
CAMBER AT MIDSPAN	1 7/8"	± 3/8"
DESIGN DEPTH	29"	± 1/4"
PANEL "K"	3'-4"	± 1/4"
OVERALL LENGTH	57' 7"	± 3/8"
WEB DEPTH	31 7/8"	± 1/4"

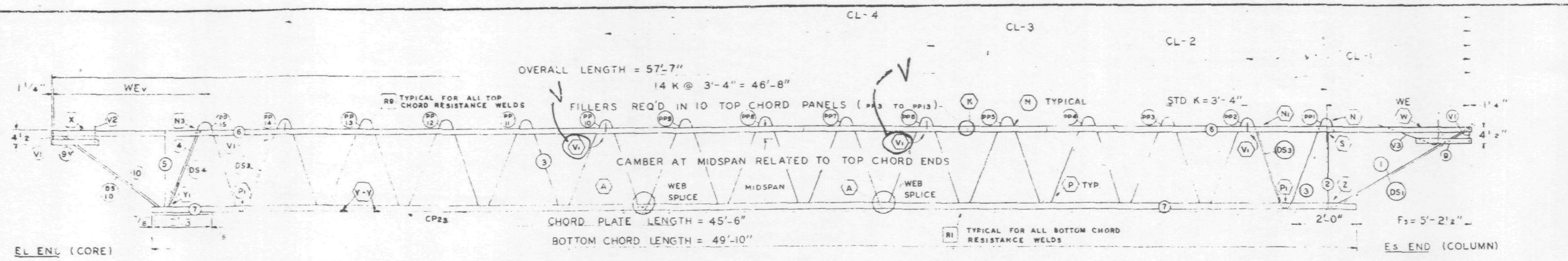

TRUSS ELEVATION

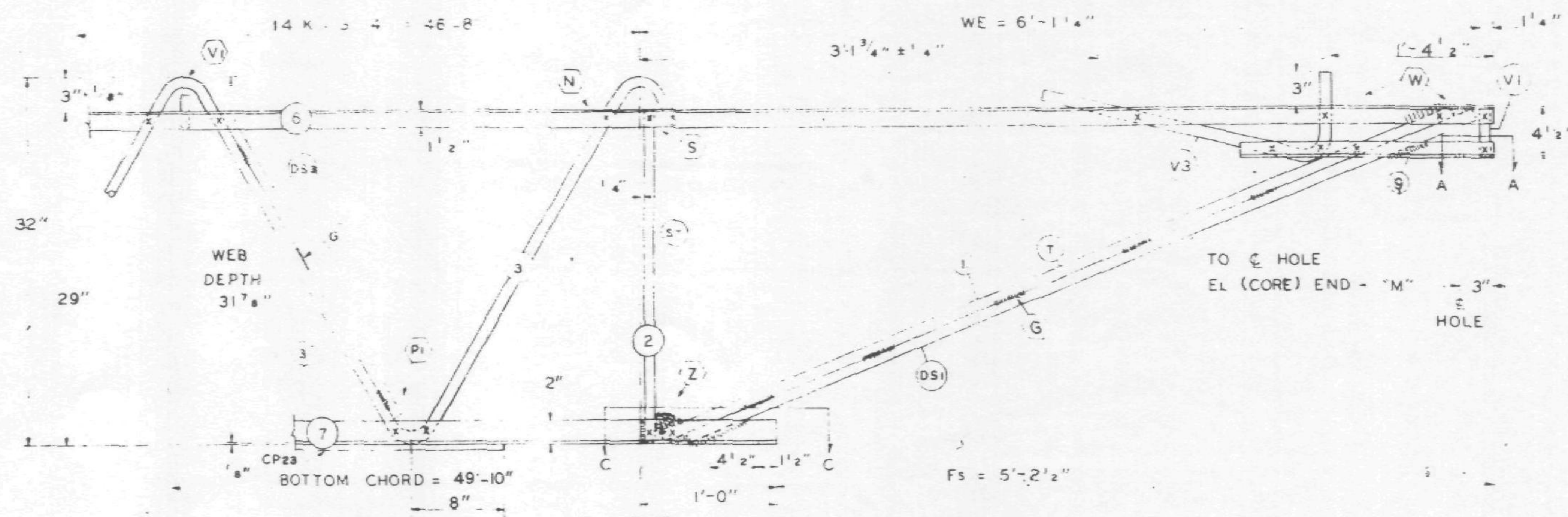

Es END (COLUMN)

ALL PANEL POINTS RESISTANCE WELDED (X)
ARC WELDS INDICATED AT SHADED AREAS AND AT BOTTOM CHORD WEB SPLICES
ALL WELD DETAILS SHOWN ON SHEETS ST290 – ST294 AND ST286.
SEE SHEET ST295 FOR V1, V2, V3, DETAILS
LETTERS IN HEXAGON INDICATE WELD DETAILS i.e. A
LETTERS AND NUMBERS IN SQUARES INDICATE RESISTANCE WELD STRENGTH IDENTIFIED IN THE QUALITY CONTROL PROGRAM i.e. RI

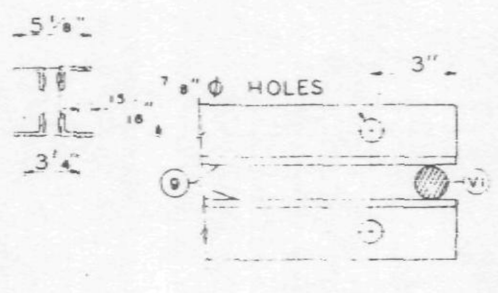

SECTION A-A

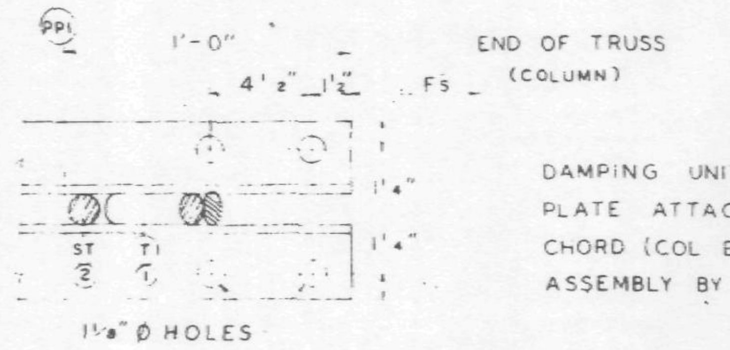

SECTION C-C

DAMPING UNIT CONNECTION PLATE ATTACHED TO BOTTOM CHORD (COL END) IN FIELD ASSEMBLY BY OTHERS

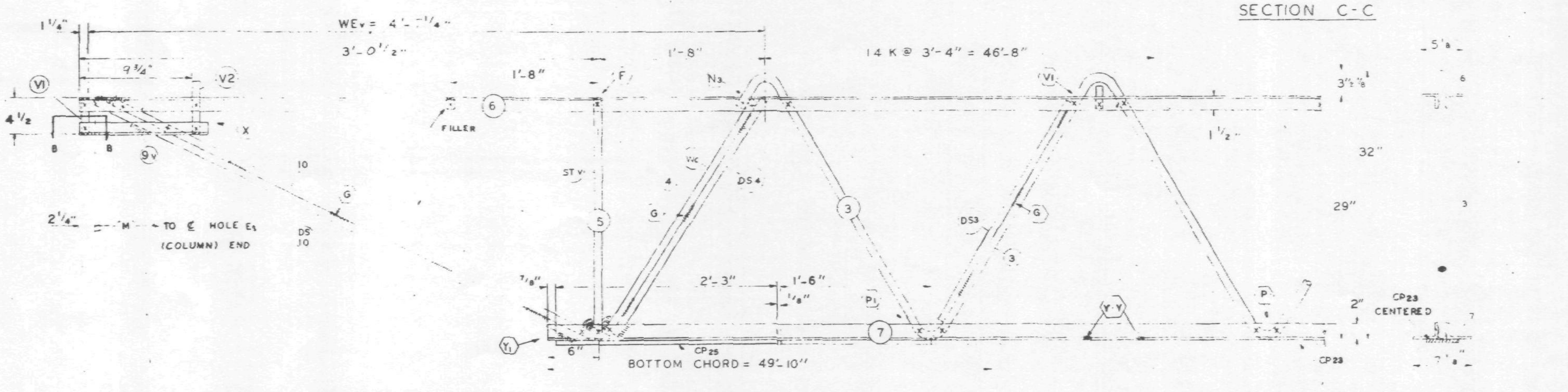

El END (CORE)

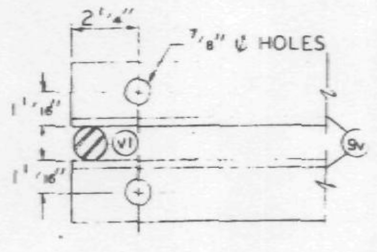

SECTION B-B

NO	DATE	REVISION	BY

REF DRWG.

7-AB1-27	1-6-69
7-AB4-50	8-1-68
7-AB3-41	1-6-69
7-AB1-53	7-22-68

CHRISTIANSEN ROBERTSON
Structural & Civil Engineers
X APPROVED AS NOTED
6/4/69 SK

PAINT
LACLEDE ELECTROCOAT
RED NO. 10001

TRUSS DESIGNATION	TOP CHORD TWO ANGLES				BOTTOM CHORD TWO ANGLES				MAIN WEB "W"					FILLER		"M" C-C HOLES	CONNECTION FILLERS			CHORD PLATE				REINFORCING ANGLE				CHORD PLATE			
	MK	TYPE STEEL	CHORD SIZE	LENGTH	MK	TYPE STEEL	CHORD SIZE	LENGTH	MK	TYPE STEEL	DIA	LENGTH	NO. OF K	NO	DIA		NO	DIA	LENGTH	MK	TYPE STEEL	SIZE	LENGTH	MK	TYPE STEEL	ANGLE SIZE	LENGTH	MK	TYPE STEEL	SIZE	LENGTH
C32T30P-577	6	A242	2"x1 1/2"x.37	57'-7"	7	A36	3"x2"x.37	49'-10"	3	A242	1.14	88'-1 1/4"	14 @ 3'-4" = 46'-8"	11	1.14	57'- 3/4"	4	1.14	0'-3"	CP23	A36	4 1/2"x.39	45'-6"	—	—	—	—	CP25	A36	4 1/2" x .39"	2'-3"

COLUMN END

Es END TRUSS DESIGNATION	BEARING ANGLES				WE	DIAGONAL "T" STRUT				VERTICAL "ST" STRUT				END STIFFENER MK V1			END STIFFENER MK V3			DOUBLE STRUT			
	MK	TYPE STEEL	CHORD SIZE	LENGTH		MK	TYPE STEEL	DIA	LENGTH	MK	TYPE STEEL	DIA	LENGTH	TYPE STEEL	DIA	LENGTH	TYPE STEEL	DIA	LENGTH	MK	TYPE STEEL	DIA	LGTH
C32T30P-577	9	A242	2"x1 1/2"x.37	2'-3"	6'-1 1/4"	1	A242	1.14	6'-3 1/8"	2	A242	1.14	2'-4 7/8"	A242	1.14	4 3/8"	A242	1.14	2'-9 1/2"	DS1	A242	.92	6'-3 1/8"

CHECK DIMENSION FOR TRUSS FAB. LOCATION OF TRANS. TRUSS				
CL-1	CL-2	CL-3	CL-4	Fs
9'-6 1/2"	22'-10 1/2"	36'-2 1/2"	49'-6 1/2"	5'-2 1/2"

CORE END

El END TRUSS DESIGNATION	BEARING ANGLES				WEv	DIAGONAL "Tv" STRUT				VERTICAL "STv" STRUT				END STIFFENER MK. V1			END STIFFENER MK. V2			END STIFFENER MK. V4			WEB "Wc"					DOUBLE STRUT				DOUBLE STRUT				(2) DOUBLE STRUT (RECO)			
	MK.	TYPE STEEL	CHORD SIZE	LENGTH		MK.	TYPE STEEL	DIA	LENGTH	MK.	TYPE STEEL	DIA.	LENGTH	TYPE STEEL	DIA.	LENGTH	TYPE STEEL	DIA.	LENGTH	TYPE STEEL	DIA.	LENGTH	MK	TYPE STEEL	PCS	DIA	LENGTH	MK.	TYPE STEEL	DIA	LENGTH	MK	TYPE STEEL	DIA	LENGTH	MK	TYPE STEEL	DIA	LENGTH
C32T30P-577	9	A242	2"x1 1/2"x.37	11 3/4"	4'-7 1/4"	10	A242	1.14	3'-7"	5	A242	1.14	2'-4 7/8"	A242	1.14	4 3/8"	A242	1.14	7 3/8"	—	—	—	4	A242	1	1.14	2'-9 1/2"		A242	.75	2'-9 1/2"	DS10	A242	.92	3'-7"	DS3	A242	.75	2'-6 3/4"

STEEL TRUSS DETAILS
FOR
WORLD TRADE CENTER - N.Y.C.
FOR
THE PORT OF NEW YORK AUTHORITY

FLOOR TRUSS C32T30P 57'-7" OVERALL
WORLD TRADE CENTER TOWERS A & B

FABRICATION BY: LACLEDE STEEL COMPANY
FABRICATED AT: MADISON, ILLINOIS
DESIGN DRAWING NO. 7-AB1-27 PLATE
APPROVED FOR FABRICATION BY: FOR P.O.N.Y.A. DATE
DRAWN BY: [illegible] DATE: APRIL 25, 1969
APPROVED FOR FABRICATION BY: LACLEDE STEEL CO. DATE
CHECKED BY: T.M.CHUMA DATE: APRIL 25, 1969
IN CHARGE OF PROD. DEV.
DETAILED BY: A.C. WEBER
FABRICATION CONT. NO. W.T.C. 221
SHEET NO. ST230P

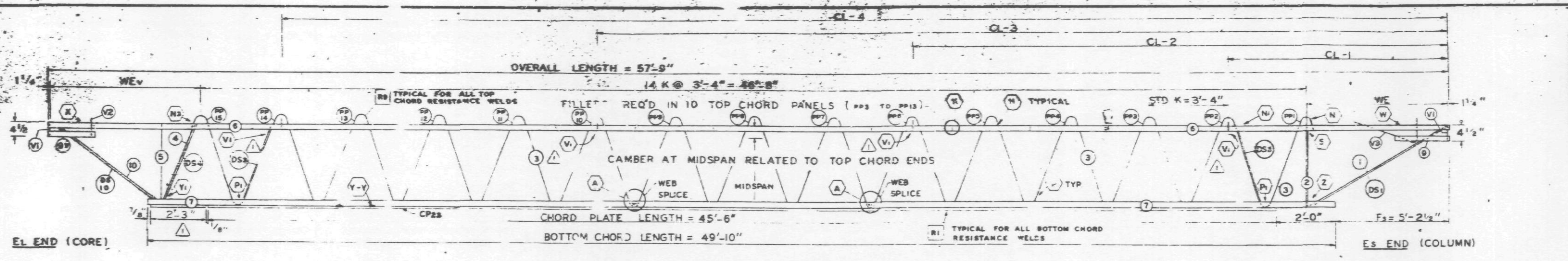

TRUSS ELEVATION

FABRICATION REQUIREMENTS		
	[illegible]	TOLERANCE
CAMBER AT MIDSPAN	[illegible]	[illegible]
DESIGN DEPTH	2	± 1/4"
PANEL "K"	3'-4"	± 1/4"
OVERALL LENGTH	57'-9"	[illegible]
WEB DEPTH	31 7/8"	1/4"

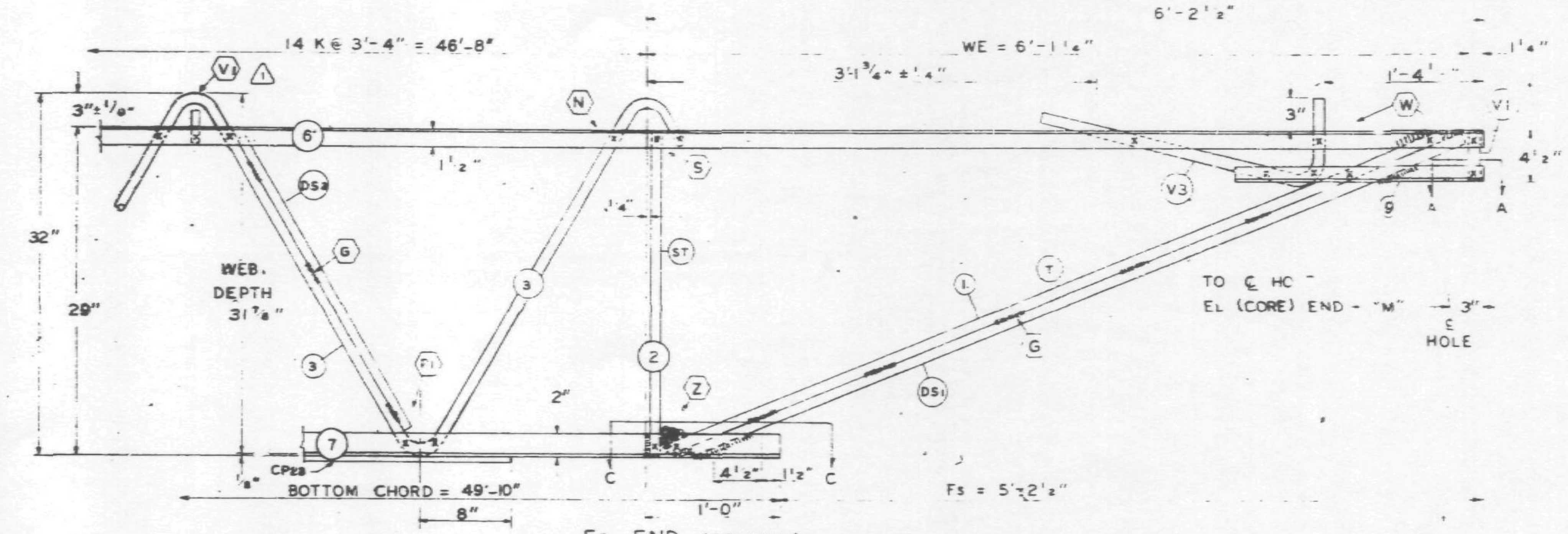

ES END (COLUMN)

ALL PANEL POINTS RESISTANCE WELDED (X)
ARC WELDS INDICATED AT SHADED AREAS AND AT BOTTOM CHORD WEB SPLICES
ALL WELD DETAILS SHOWN ON SHEETS ST290 – ST294 AND ST286.
SEE SHEET ST295 FOR V1, V2, V3, DETAILS
LETTERS IN HEXAGON INDICATE WELD DETAILS ie. (A)
LETTERS AND NUMBERS IN SQUARES INDICATE RESISTANCE WELD STRENGTH IDENTIFIED IN THE QUALITY CONTROL PROGRAM ie. [R1]

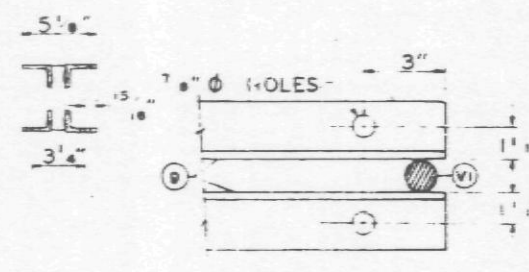

SECTION A-A

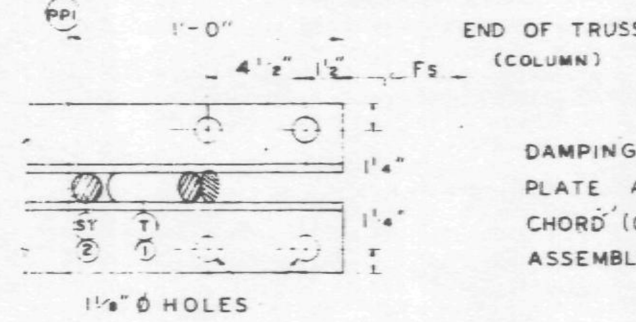

SECTION C-C

DAMPING UNIT CONNECTION PLATE ATTACHED TO BOTTOM CHORD (COL END) IN FIELD. ASSEMBLY BY OTHERS.

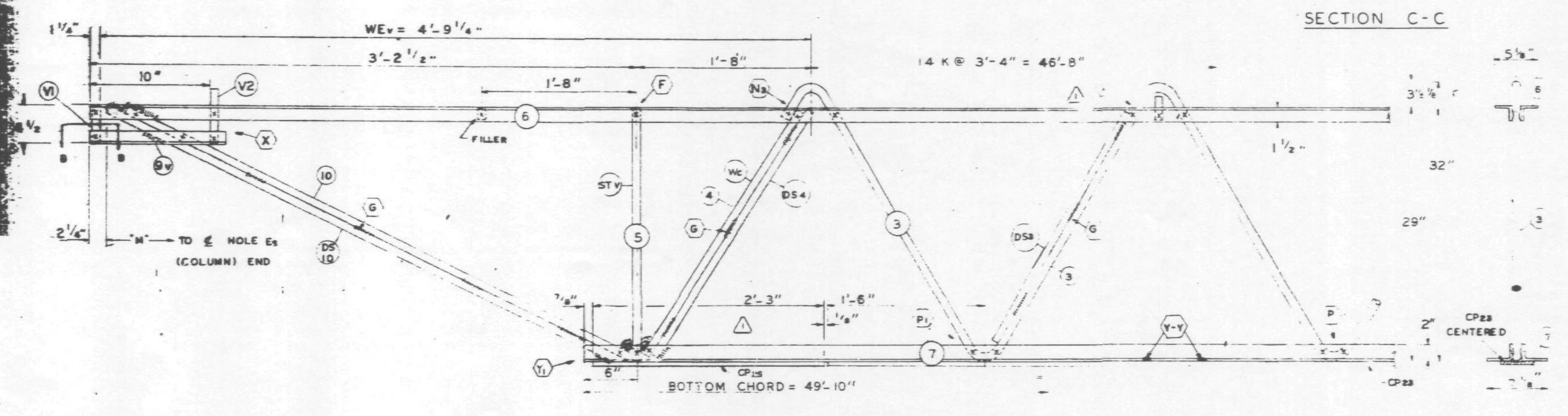

EL END (CORE)

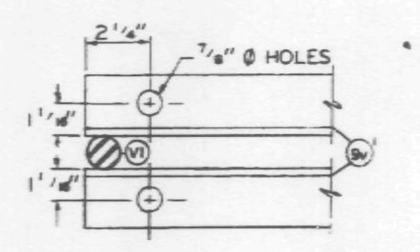

SECTION B-B

NO	DATE	REVISION	BY
1	2-18-69	AS NOTED	L.H.H.

REF DRWG.

7-AB1-27	1-6-69
7-AB4-50	8-1-68
7-AB3-41	1-6-69
7-AB1-53	7-22-68

PAINT
LACLEDE ELECTROCOAT
RED NO. 10001

STEEL TRUSS DETAILS
FOR
WORLD TRADE CENTER - N.Y.C.
FOR
THE PORT OF NEW YORK AUTHORITY

FLOOR TRUSS C32T30N 57'-9" OVERALL
WORLD TRADE CENTER TOWERS A & B

FABRICATION BY: LACLEDE STEEL COMPANY
FABRICATED AT: MADISON, ILLINOIS
DESIGN DRAWING NO. 7-AB1-27 PLATE
APPROVED FOR FABRICATION BY James White FOR P.O.N.Y.A. DATE 2/[illegible]/69
DRAWN BY: [illegible] DATE: JAN. 20, 1969
APPROVED FOR FABRICATION BY: ______ FOR FABRICATOR DATE
CHECKED BY: [illegible] DATE: JAN. 21, 1969
IN CHARGE OF PROD. DEV.
DETAILED BY: A. G. [illegible]
FABRICATION CONT. NO. W.T.C. 221
SHEET NO. ST[illegible]

TRUSS DESIGNATION	TOP CHORD TWO ANGLES				BOTTOM CHORD TWO ANGLES				MAIN WEB "W"					FILLER		"M" C/C HOLES	CONNECTION FILLERS (1)			CHORD PLATE				REINFORCING ANGLE				CHORD PLATE (1)			
	MK.	TYPE STEEL	CHORD SIZE	LENGTH	MK.	TYPE STEEL	CHORD SIZE	LENGTH	MK.	TYPE STEEL	DIA.	LENGTH	NO. OF K	NO.	DIA.		NO.	DIA.	LENGTH	MK.	TYPE STEEL	SIZE	LENGTH	MK.	TYPE STEEL	ANGLE SIZE	LENGTH	MK.	TYPE STEEL	SIZE	LENGTH
C32T30N-579	6	A242	2"x1 1/2"x .37	57'-9"	7	A36	3"x2"x.37	49'-10"	3	A242	1.14	88'-1 1/4"	14 @ 3'-4" = 46'-8"	11	1.14	57'-3 3/4"	4	1.14	0'-3"	CP 23	A36	4 1/2"x .39	45'-6"	—	—	—	—	CP 25	A36	4 1/2" x .39"	2'-3"

COLUMN END

Es END	TRUSS DESIGNATION	BEARING ANGLES (1)				WE	DIAGONAL "T" STRUT				VERTICAL "ST" STRUT				END STIFFENER MK. V1			END STIFFENER MK. V3			DOUBLE STRUT			
		MK.	TYPE STEEL	CHORD SIZE	LENGTH		MK	TYPE STEEL	DIA	LENGTH	MK	TYPE STEEL	DIA.	LENGTH	TYPE STEEL	DIA.	LENGTH	TYPE STEEL	DIA.	LENGTH	MK	TYPE STEEL	DIA	LGTH.
	C32T30N-579	9	A242	2"x1 1/2"x .37	2'-3"	6'-1 1/4"	1	A242	1.14	6'-3 1/8"	2	A242	1.14	2'-4 3/8"	A242	1.14	4 3/8"	A242	1.1[illegible]	[illegible] 2"	DS 1	A242	.92	6'-3 1/8"

CHECK DIMENSION FOR TRUSS FAB.

LOCATION OF TRANS TRUSS				
CL-1	CL-2	CL-3	CL-4	Fs
9'-6 1/2"	22'-10 1/2"	36'-2 1/2"	49'-6 1/2"	5'-2 1/2"

CORE END

EL END	TRUSS DESIGNATION	BEARING ANGLES (1)				WEv	DIAGONAL "Tv" STRUT (1)				VERTICAL "STv" STRUT				END STIFFENER MK. V1			END STIFFENER MK. V2			END STIFFENER MK. V4			WEB "Wc"					DOUBLE STRUT				DOUBLE STRUT (1)				(2) (REQ'D) DOUBLE STRUT			
		MK.	TYPE STEEL	CHORD SIZE	LENGTH		MK.	TYPE STEEL	DIA	LENGTH	MK.	TYPE STEEL	DIA.	LENGTH	TYPE STEEL	DIA.	LENGTH	TYPE STEEL	DIA.	LENGTH	TYPE STEEL	DIA.	LENGTH	MK	TYPE STEEL	PCS	DIA	LENGTH	MK.	TYPE STEEL	DIA	LENGTH	MK	TYPE STEEL	DIA	LENGTH	MK	TYPE STEEL	DIA	LENGTH
	C32T30N-579	9	A242	2"x1 1/2"x .37	1'-0"	4'-9 1/4"	10	A242	1.14	3'-8 1/4"	5	A242	1.14	2'-4 7/8"	A242	1.14	4 3/8"	A242	1.14	7 3/8"	—	—	—	4	A242	1	1.14	2'-9 1/2"	DS 4	A242	.75	2'-9 1/2"	DS 10	A242	.92	3'-8 1/4"	DS 3	A242	.75	2'-6 3/4"

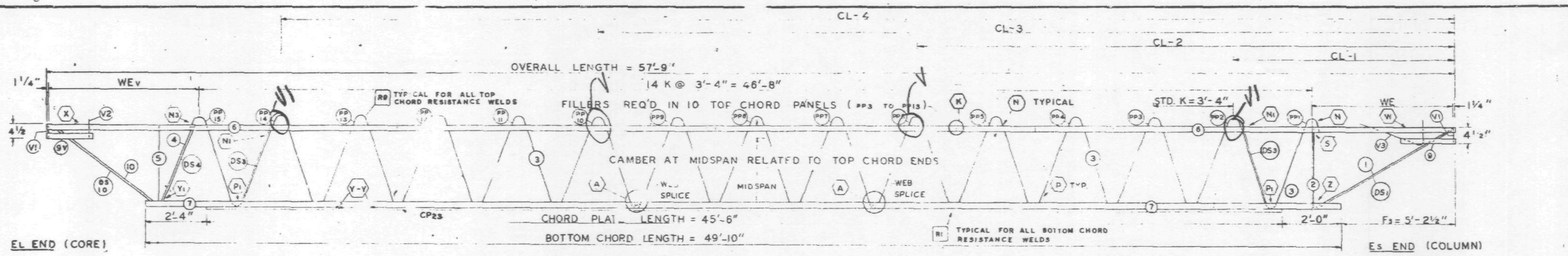

TRUSS ELEVATION

FABRICATION REQUIRMENTS	DESIGN	TOLERANCE
CAMBER AT MIDSPAN	1 7/8"	± 3/8"
DESIGN DEPTH	29"	± 1/4"
PANEL "K"	3'-4"	1/4"
OVERALL LENGTH	57'-9"	± 3/8"
WEB DEPTH	31 7/8"	± 1/4"

ALL PANEL POINTS RESISTANCE WELDED (X)
ARC WELDS INDICATED AT SHADED AREAS AND AT BOTTOM CHORD WEB SPLICES
ALL WELD DETAILS SHOWN ON SHEETS ST290 – ST294 AND ST287.
SEE SHEET ST295 FOR V1, V2, V3, DETAILS
LETTERS IN HEXAGON INDICATE WELD DETAILS i.e. (A)
LETTERS AND NUMBERS IN SQUARES INDICATE RESISTANCE WELD STRENGTH IDENTIFIED IN THE QUALITY CONTROL PROGRAM i.e. [R1]

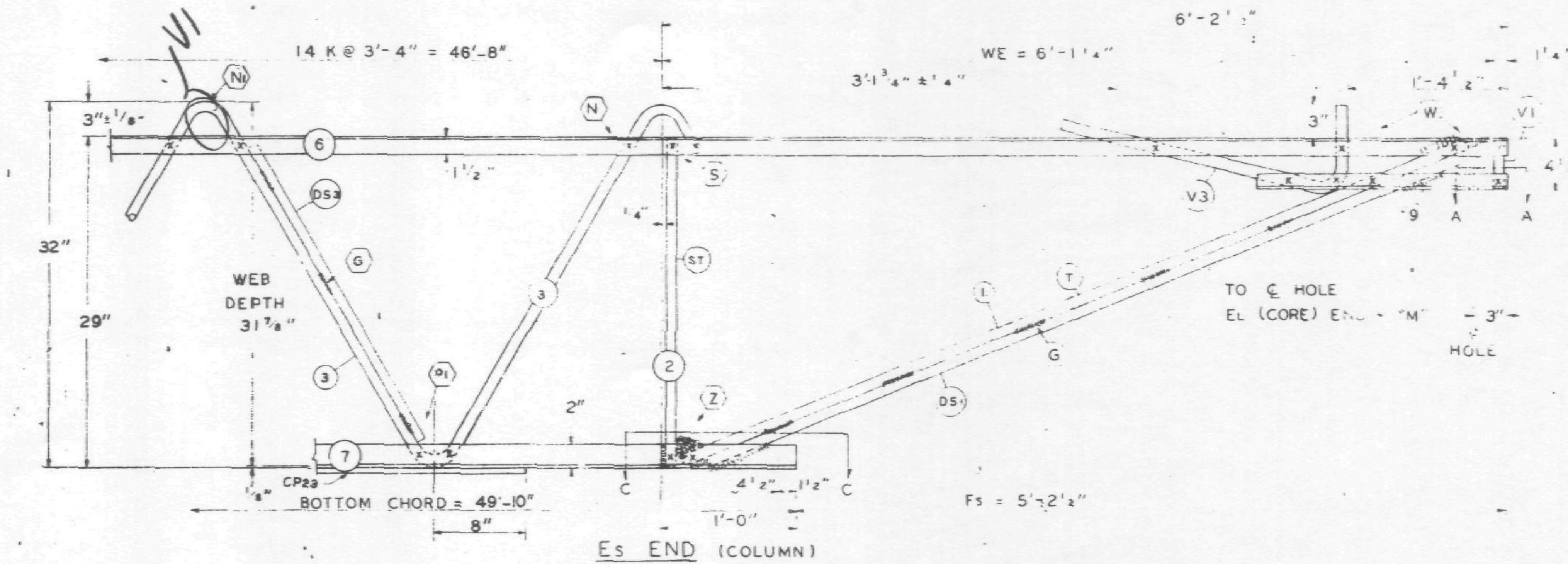

Es END (COLUMN)

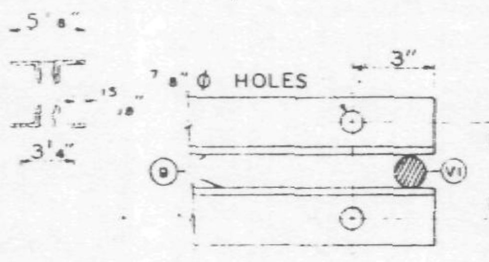

SECTION A-A

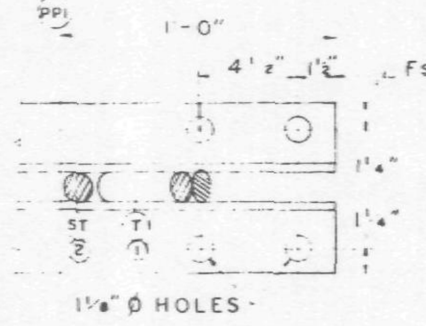

SECTION C-C

DAMPING UNIT CONNECTION PLATE ATTACHED TO BOTTOM CHORD (COL END) IN FIELD. ASSEMBLY BY OTHERS.

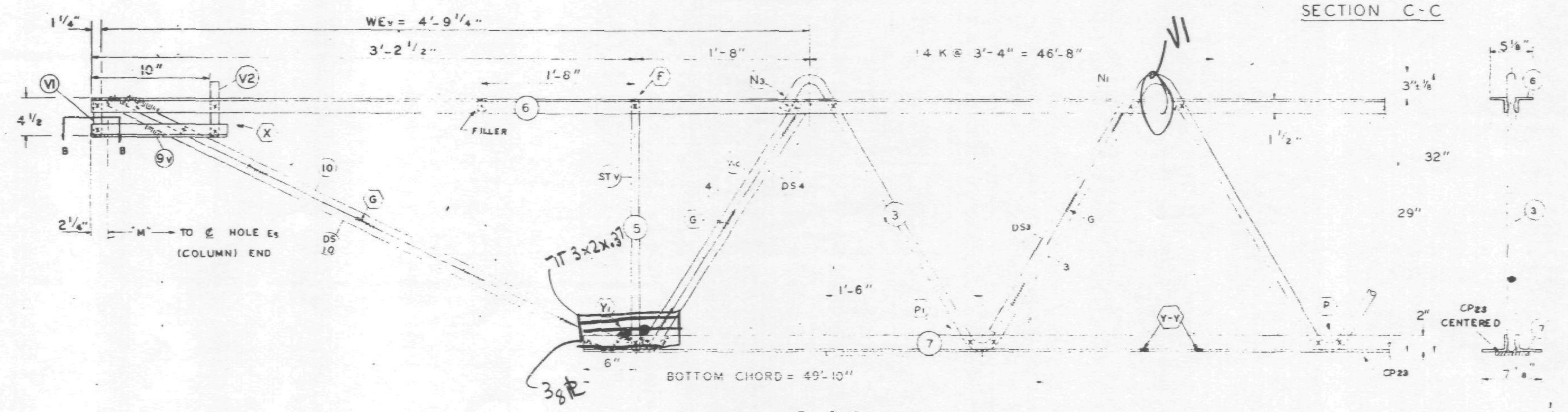

EL END (CORE)

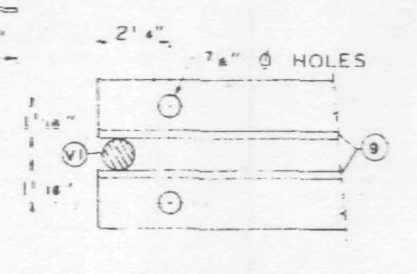

SECTION B-B

REF DRWG.

7-AB1-27	1-6-69
7-AB4-50	8-1-68
7-AB3-41	1-6-69
7-AB1-53	7-22-68

PAINT
LACLEDE ELECTROCOAT
RED NO. 10001

TRUSS DESIGNATION	TOP CHORD TWO ANGLES				BOTTOM CHORD TWO ANGLES				MAIN WEB "W"					FILLER		"M" C-C HOLES	CONNECTION FILLERS			CHORD PLATE			
	MK.	TYPE STEEL	CHORD SIZE	LENGTH	MK	TYPE STEEL	CHORD SIZE	LENGTH	MK.	TYPE STEEL	DIA	LENGTH	NO. OF K	NO	DIA		NO	DIA.	LENGTH	MK	TYPE STEEL	SIZE	LENGTH
C32T30N-579	6	A242	2"x1 1/2"x 37	57'-9"	7	A36	3"x 2" x 37	49'-10"	3	A242	1.14	88'-1 1/4"	14 @ 3'-4" = 46'-8"	11	1.14	57'-3 3/4"	— 4	— 1.14	— 4	CP 23	A36	4 1/2"x .39	45'-6"

COLUMN END

Es END TRUSS DESIGNATION	BEARING ANGLES				WE	DIAGONAL "T" STRUT				VERTICAL "ST" STRUT				END STIFFENER MK. V1			END STIFFENER MK. V3		DOUBLE STRUT			
	MK	TYPE STEEL	CHORD SIZE	LENGTH		MK	TYPE STEEL	DIA	LENGTH	MK.	TYPE STEEL	DIA.	LENGTH	TYPE STEEL	DIA	LENGTH	TYPE STEEL	LENGTH	MK	TYPE STEEL	DIA	LGTH
C32T30N-579	9	A242	2"x1 1/2"x .25 (.37)	2'-3"	6'-1 1/4"	1	A242	1.14	6'-3 1/8"	2	A242	1.14	2'-4 7/8"	A242	1.14	4 3/8"	A242	[illegible] 1/2"	DS1	A242	.92	6'-3 1/8"

CHECK DIMENSION FOR TRUSS FAB.

LOCATION OF TRANS. TRUSS				
CL-1	CL-2	CL-3	CL-4	Fs
9'-6 1/2"	22'-10 1/2"	36'-2 1/2"	49'-6 1/2"	5'-2 1/2"

CORE END

EL END TRUSS DESIGNATION	BEARING ANGLES				WEv	DIAGONAL "Tv" STRUT				VERTICAL "STv" STRUT				ND STIFFENER MK. V1			ND STIFFENER MK. V2			ND STIFFENER MK. V4			WEB "Wc"					DOUBLE STRUT				DOUBLE STRUT				(2) (REQ'D) DOUBLE STRUT			
	MK.	TYPE STEEL	CHORD SIZE	LENGTH		MK	TYPE STEEL	DIA	LENGTH	MK.	TYPE STEEL	DIA.	LENGTH	TYPE STEEL	DIA.	LENGTH	TYPE STEEL	DIA.	LENGTH	TYPE STEEL	DIA.	LENGTH	MK	TYPE STEEL	PCS	DIA	LENGTH	MK.	TYPE STEEL	DIA	LENGTH	MK	TYPE STEEL	DIA	LENGTH	MK	TYPE STEEL	DIA	LENGTH
C32T30N-579	9	A242	2"x1 1/2"x .25 (.37)	1'-0"	4'-9 1/4"	10	A242	1.14	3'-7 3/8"	5	A242	1.14	2'-4 7/8"	A242	1.14	4 3/8"	A242	1.14	7 3/8"	—	—	—	4	A242	1	1.14	2'-9 1/2"	DS4	A242	.75	2'-9 1/2"	DS10	A242	92	3'-7 3/8"	DS3	A242	.75	2'-6 3/4"

2/10/69 SK

STEEL TRUSS DETAILS
FOR
WORLD TRADE CENTER - N.Y.C.
FOR
THE PORT OF NEW YORK AUTHORITY

FLOOR TRUSS C32T30N 57'-9" OVERALL
WORLD TRADE CENTER TOWERS A & B

FABRICATION BY: LACLEDE STEEL COMPANY
FABRICATED AT: MADISON, ILLINOIS
DESIGN DRAWING NO. 7-AB1-27 PLATE
APPROVED FOR FABRICATION BY: ______ FOR P.O.N.Y.A. DATE
DRAWN BY: L.R. DATE: JAN. 20 1969
APPROVED FOR FABRICATION BY: A.C. WEBER FOR FABRICATOR DATE
CHECKED BY: T.M. CHURA DATE: JAN. 21, 1969
IN CHARGE OF PROD. DEV.
DETAILED BY: A.C. WEBER
FABRICATION CONT. NO. W.T.C. 221
SHEET NO. ST230N

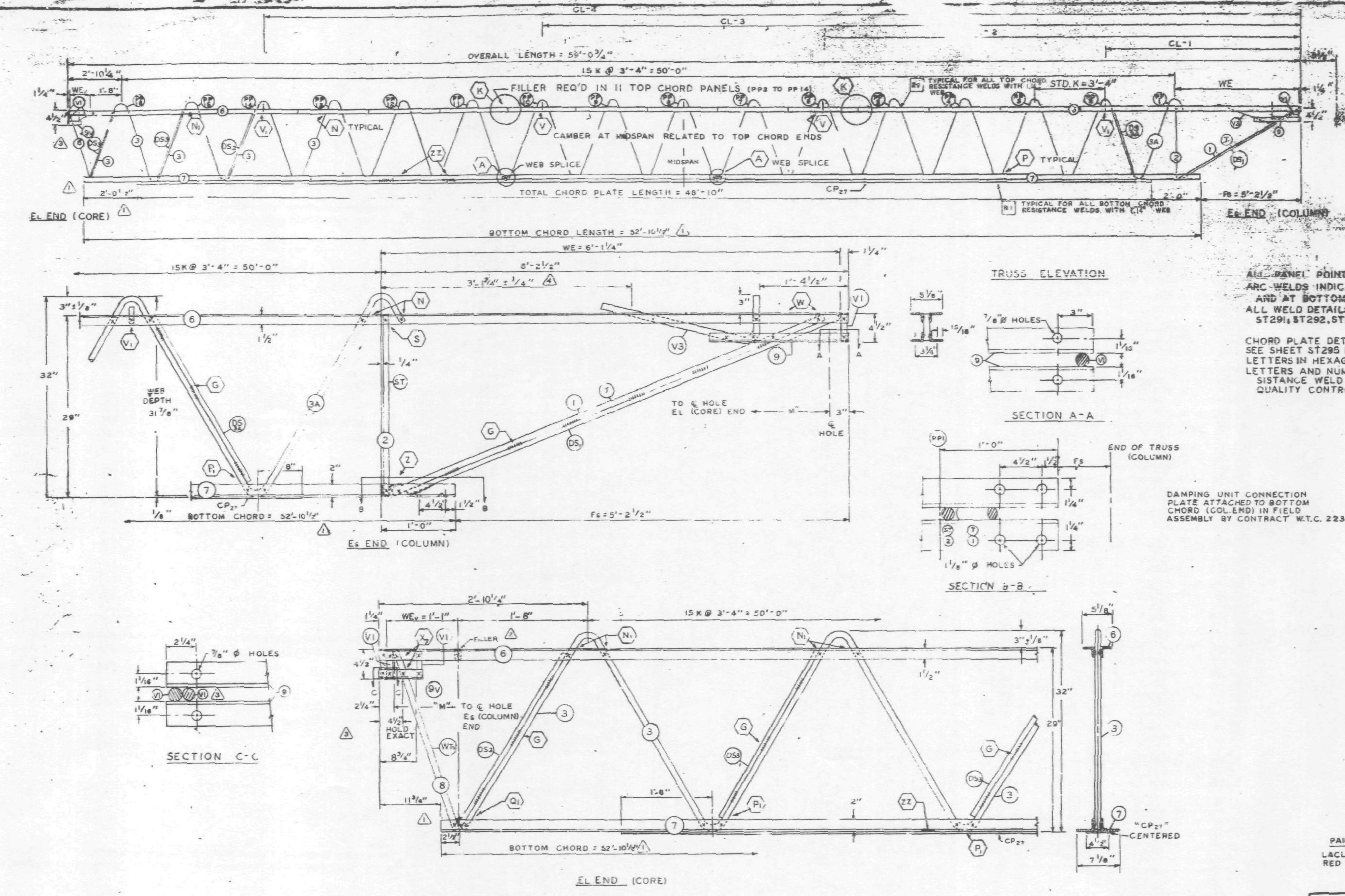

ALL PANEL POINTS RESISTANCE ...
ARC WELDS INDICATED AT SHAL...
AND AT BOTTOM CHORD WEB ...
ALL WELD DETAILS SHOWN ON S...
ST291, ST292, ST293, ST 294 & S...

CHORD PLATE DETAILS SHOWN ON ... T ...
SEE SHEET ST295 FOR V1 & V3 DET...
LETTERS IN HEXAGON INDICATE A... ...
LETTERS AND NUMBERS IN SQUA... ...DICATE ...
SISTANCE WELD STRENGTH IDE... ...HE
QUALITY CONTROL PROGRAM.

NO.	DATE	REVISION	BY
4	3-11-69	AS NOTED	G.D.C.
3	3-3-69	AS NOTED	G.D.C.
2	2-16-69	AS NOTED	T.M.C.
1	1-31-69	AS NOTED	G.D.C.

REF. DRWG.

7-AB1-28	1-4-68
7-AB1-52	2-15-68
7-AB4-14	1-3-68
7-AB1-54	11-25-68
7-AB1-53	7-22-68
7-AB3-70	11-25-68

PAINT

LACLEDE ELECTROCOAT
RED NO. 10001

TRUSS DESIGNATION	TOP CHORD TWO ANGLES				BOTTOM CHORD TWO ANGLES				MAIN WEB "W"					FILLER		CONNECTION FILL			CHORD PLATE				M" 5/8 HOLES
	MK.	TYPE STEEL	CHORD SIZE	LENGTH	MK.	TYPE STEEL	CHORD SIZE	LENGTH	MK.	TYPE STEEL	DIA.	LENGTH	NO. OF K	NO.	DIA.	NO.	DIA.	LENGTH	MK.	TYPE STEEL	SIZE	LENGTH	
C32T31-59075	6	A242	2"x1 1/2"x.37	59'-0 3/4"	7	A36	3"x2"x.37"	52'-10 1/2"	3 3A	A242 A242	1.14 1.14	56'-0 3/4" 40'-11 1/4"	9K @ 3'-4" = 30'-0" 6 1/2K @ 3'-4" = 21'-8"	12	1.14	4	1.14	1'-3"	CP27	A36	4 1/2x.39	48'-10"	58'-7

COLUMN END	Ec END	TRUSS DESIGNATION	BEARING ANGLES				WE	DIAGONAL "T" STRUT				VERTICAL "ST" STRUT				END STIFFENER MK. V1			END STIFFENER MK. V3			DOUBLE STRUT				DOUBLE STRUT			
			MK.	TYPE STEEL	CHORD SIZE	LENGTH		MK.	TYPE STEEL	DIA.	LENGTH	MK.	TYPE STEEL	DIA.	LENGTH	TYPE STEEL	DIA.	LENGTH	TYPE STEEL	DIA.	LENGTH	MK.	TYPE STEEL	DIA.	LENGTH	MK.	TYPE STEEL	DIA.	LENGTH
		C32T31-59075	9	A242	2"x1 1/2"x.37	2'-3"	6'-1 1/4"	1	A242	1.14	6'-3 1/8"	2	A242	1.14	2'-4 7/8"	A242	1.14	0'-4 3/8"	A242	1.14	2'-9 1/2"	DS1	A242	.92	6'-3 1/8"	DS3A	A242	.75	2'-6 3/4"

CORE END	EL END	TRUSS DESIGNATION	BEARING ANGLE				WEV	DOUBLE STRUT				DOUBLE STRUT				END STIFFENER MK. V1			WEB "WCV"					WEB "WTV"				
			MK.	TYPE STEEL	CHORD SIZE	LENGTH		MK.	TYPE STEEL	DIA.	LENGTH (3 REQ'D)	MK.	TYPE STEEL	DIA.	LENGTH	TYPE STEEL	DIA.	LENGTH (3 REQ'D)	MK.	TYPE STEEL	PCS	DIA.	LENGTH	MK.	TYPE STEEL	PCS.	DIA.	LENGTH
		C32T31-59075	9V	A242	2"x1 1/2"x.37"	0'-10"	1'-1"	DS2	A242	.98	2'-8 3/4"	—	—	—	—	A242	1.14	4 3/8"	—	—	—	—	—	8	A242	1	1.14	2'-6 1/4"

CHECK DIMENSION FOR TRUSS FAB.

LOCATION OF TRANS. TRUSS				
CL-1	CL-2	CL-3	CL-4	Fs
9'-6 1/2"	-10 1/2"	36'-2 1/2"	49'-6 1/2"	5'-2 1/2"

STEEL TRUSS DETAILS
FOR
WORLD TRADE CENTER - N.Y.C.
FOR
THE PORT OF NEW YORK AUTHORITY

FLOOR TRUSS C32T31- 59'-0 3/4" OVERALL
WORLD TRADE CENTER TOWERS A-B.

FABRICATION BY: LACLEDE STEEL COMPANY
FABRICATED AT MADISON, ILLINOIS
DESIGN DRAWING NO. 7-AB1-28
PLATE
APPROVED FOR FABRICATION BY ____ FOR P.O.N.Y.A. DATE 3/24/69
DRAWN BY: ___ DATE JAN. 21, 1969
APPROVED FOR FABRICATION BY: ____ FOR FABRICATOR DATE
CHECKED BY: T.M. CHURA DATE JAN. 21, 1969
IN CHARGE OF PROD. DEV.
LACLEDE STEEL CO.
DETAILED BY: A. CARL WEBER
FABRICATION CONT. NO. W.T.C. 221
SHEET NO. ST 231

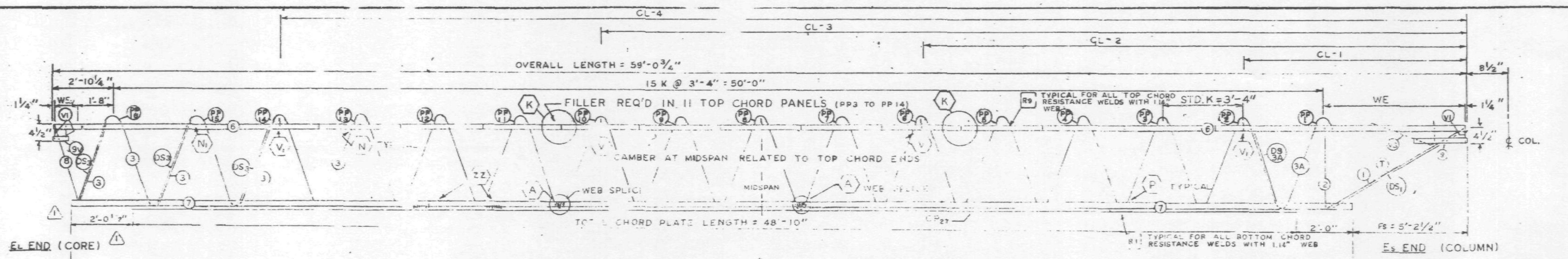

TRUSS ELEVATION

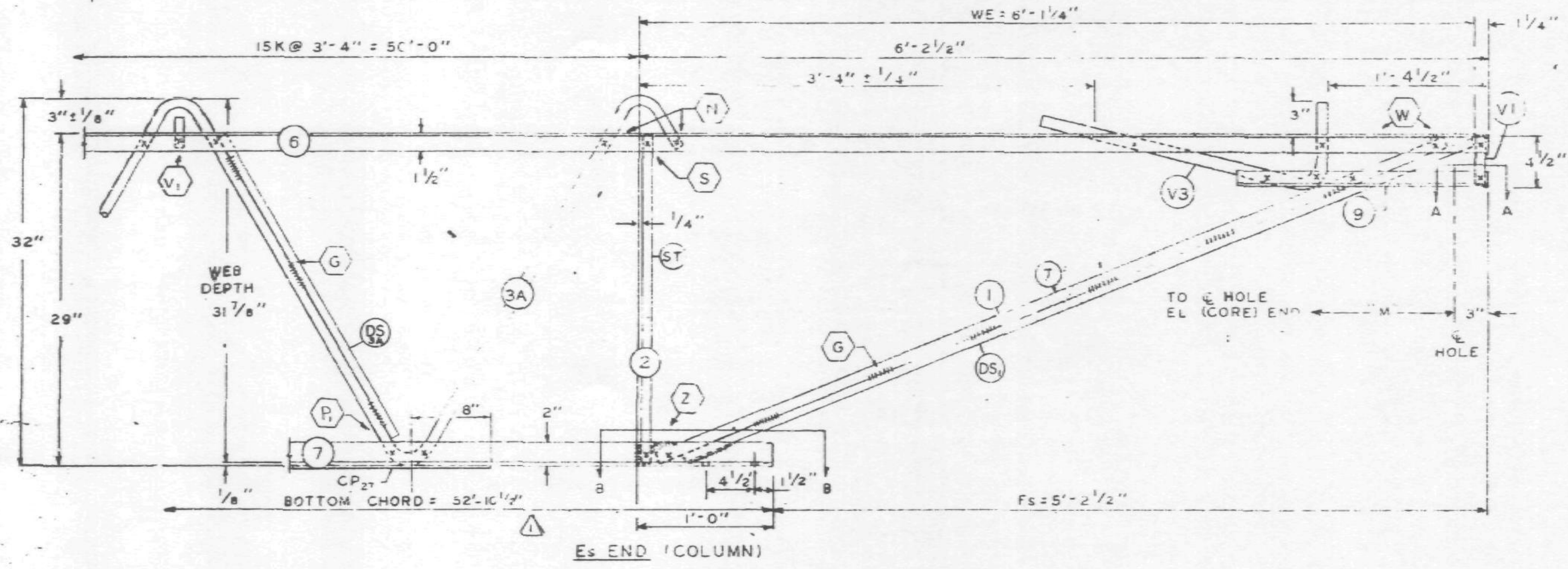

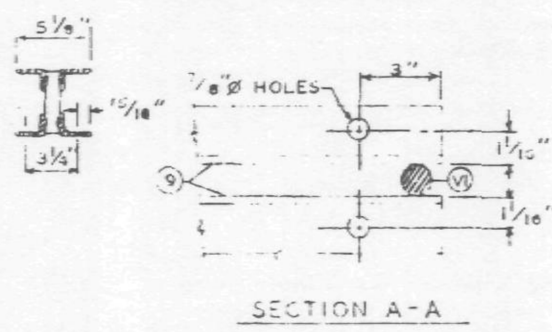

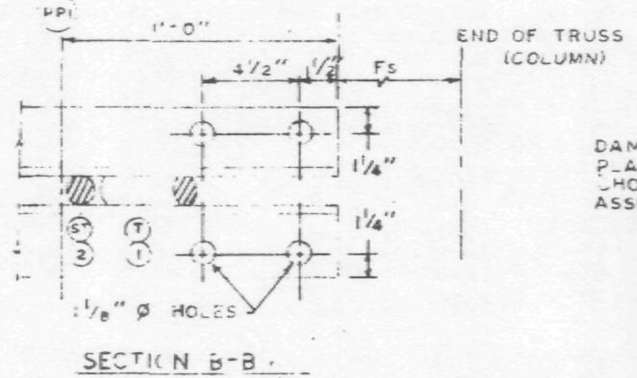

ALL PANEL POINTS RESISTANCE WELDED (X)
ARC WELDS INDICATED AT SHADED AREAS
AND AT BOTTOM CHORD WEB SPLICES
ALL WELD DETAILS SHOWN ON SHEETS ST290, ST291, ST292, ST293, AND ST287.

CHORD PLATE DETAILS SHOWN ON SHEET ST287.
SEE SHEET ST295 FOR V1 & V3 DETAILS.
LETTERS IN HEXAGON INDICATE WELD DETAILS, ie, (A)
LETTERS AND NUMBERS IN SQUARES INDICATE RESISTANCE WELD STRENGTH IDENTIFIED IN THE QUALITY CONTROL PROGRAM, ie., R-1

DAMPING UNIT CONNECTION PLATE ATTACHED TO BOTTOM CHORD (COLUMN END) IN FIELD ASSEMBLY BY CONTRACT W.T.C. 223.00.

FABRICATION REQUIREMENTS

	DESIGN	TOLERANCE
CAMBER AT MIDSPAN	2"	± 8"
DESIGN DEPTH	29"	± 1/4"
PANEL K"	3	± 1/4"
OVERALL LENGTH	¾"	± 3/
WEB DEPTH	31 7/8"	± 1/

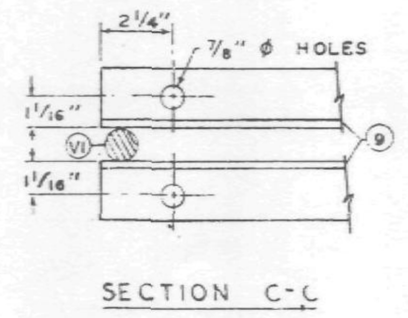

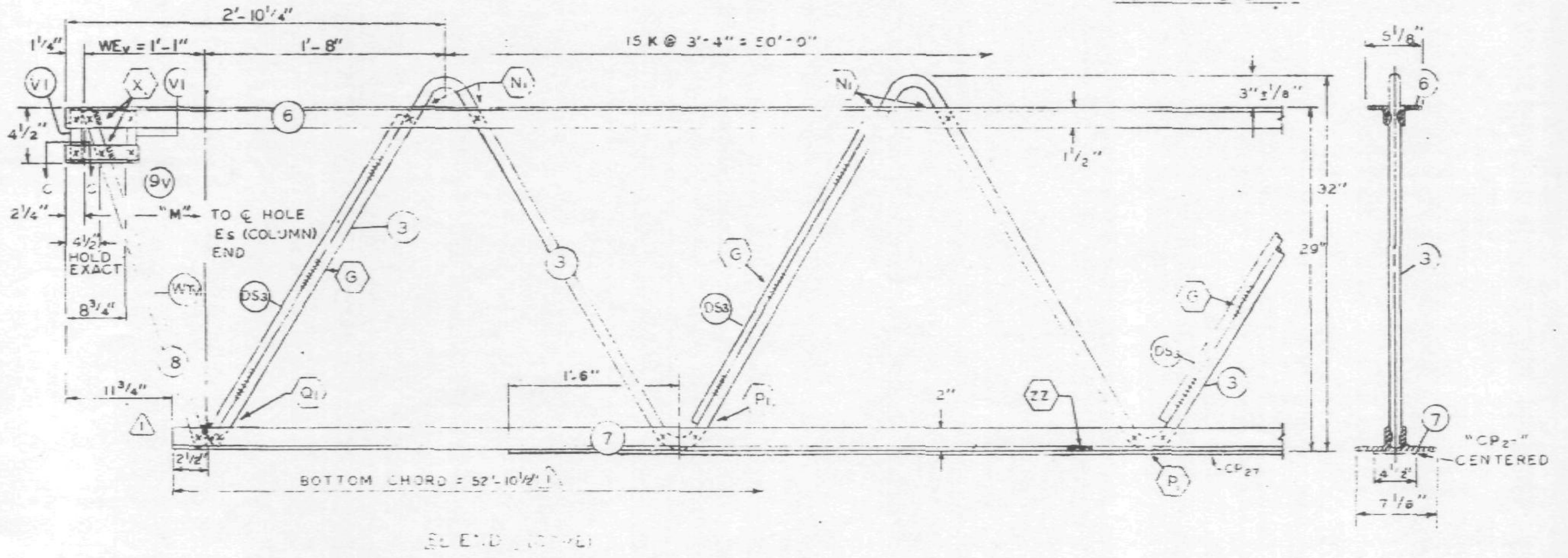

1	1-31-69	AS NOTED	G.D.C.
NO.	DATE	REVISION	BY

REF. DRWG.

7-A81-28	1-6-68
7-A81-52	2-15-68
7-A84-14	1-3-68
7-A81-54	11-25-68
7-A81-53	7-22-68
7-A83-70	11-25-68

PAINT

LACLEDE ELECTROCOAT
RED NO. 10001

2/19/69 SK

CHECK DIMENSION FOR TRUSS FAB.

LOCATION OF TRANS. TRUSS				
CL-1	CL-2	CL-3	CL-4	Fs
9'-6½"	22'-10½"	36'-2½"	49'-6½"	5'-2½"

TRUSS DESIGNATION	TOP CHORD TWO ANGLES				BOTTOM CHORD TWO ANGLES				MAIN WEB										CHORD PLATE				½" HOLES
	MK.	TYPE STEEL	CHORD SIZE	LENGTH	MK.	TYPE STEEL	CHORD SIZE	LENGTH (1)	MK.	TYPE STEEL	DIA.	LENGTH						LENGTH	MK.	TYPE STEEL	SIZE	LENGTH	
C32T31-59075	6	A36	3"x1½"x.37"	59'-0¾"	7	A36	3"x...x.37"	52'-10½"	3 / 3A	A242 / A242	1.14 / 1.14	56'-0¾" / 40'-11¼"	9K @ 3'-4" = 30'-0" / 6½K = 3'-4" = 21'-8"	14	1.14	4	1.14	2'-3"	CP_{27}	A36	4"x½x39	48'-10"	58'-½

COLUMN END	Es END	TRUSS DESIGNATION	BEARING ANGLES				WE	BEARING STRUT				VERTICAL END STRUT			END STIFFENER						DOUBLE STRUT				DOUBLE STRUT			
			MK.	TYPE STEEL	CHORD SIZE	LENGTH		MK.	TYPE STEEL	DIA.	LENGTH	TYPE STEEL	DIA.	LENGTH	TYPE STEEL	DIA.	LENGTH	TYPE STEEL	DIA.	LENGTH	MK.	TYPE STEEL	DIA.	LENGTH	MK.	TYPE STEEL	DIA.	LENGTH
		C32T31-59075	9	A242	2"x1½"x.25 (.37)	1'-10"	6'-1¼"		A242	1.14	6'-3⅛"	A242	1.14	2'-4⅞"	A242	1.14	0'-4⅜"		1.14	2'-9½"	DS_1	A242	.92	6'-3⅛"	DS_{3A}	A242	.75	2'-6¾"

CORE END	El END	TRUSS DESIGNATION	BEARING ANGLE				WEv	DOUBLE STRUT				DOUBLE STRUT				END STIFFENER			WEB "WCv"					WEB "WTv"				
			MK.	TYPE STEEL	CHORD SIZE	LENGTH		MK.	TYPE STEEL	DIA.	LENGTH (3 REQ'D)	MK.	TYPE STEEL	DIA.	LENGTH	TYPE STEEL	DIA.	LENGTH 2 REQ'D	MK.	TYPE STEEL		DIA.	LENGTH	MK.	TYPE STEEL		DIA.	LENGTH
		C32T31-59075	9V	A242	2"x1½"x.37"	0'-10"	1'-1"	DS_3	A242	.98	2'-6¾"	—	—	—	—	A242	1.14	4⅜"	—	—	—	—	—	8	A242	1	1.14	2'-6¼"

STEEL TRUSS DETAILS
FOR
WORLD TRADE CENTER - N.Y.C.
FOR
THE PORT OF NEW YORK AUTHORITY

FLOOR TRUSS C32T31 59'-0¾" OVERALL
WORLD TRADE CENTER TOWERS A-B

FABRICATION BY LACLEDE STEEL COMPANY

FABRICATED AT MADISON, ILLINOIS	DESIGN DRAWING NO. 7-A81-28	PLATE
APPROVED FOR FABRICATION BY ___ FOR P.O.N.Y.A. DATE ___	DRAWN BY: dee DATE JAN. 21, 1969	
APPROVED FOR FABRICATION BY ___ FOR FABRICATOR DATE ___	CHECKED BY: T.M. CHURA DATE JAN. 21, 1969	IN CHARGE OF PROD. DEV.
DETAILED BY: A. CARL WEBER	FABRICATION CONT. NO. W.T.C. 221	SHEET NO. ST 231

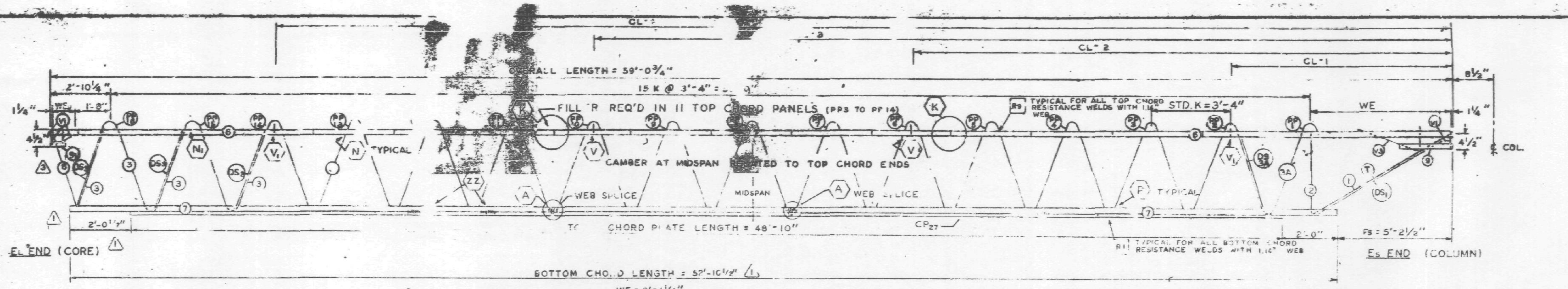

TRUSS ELEVATION

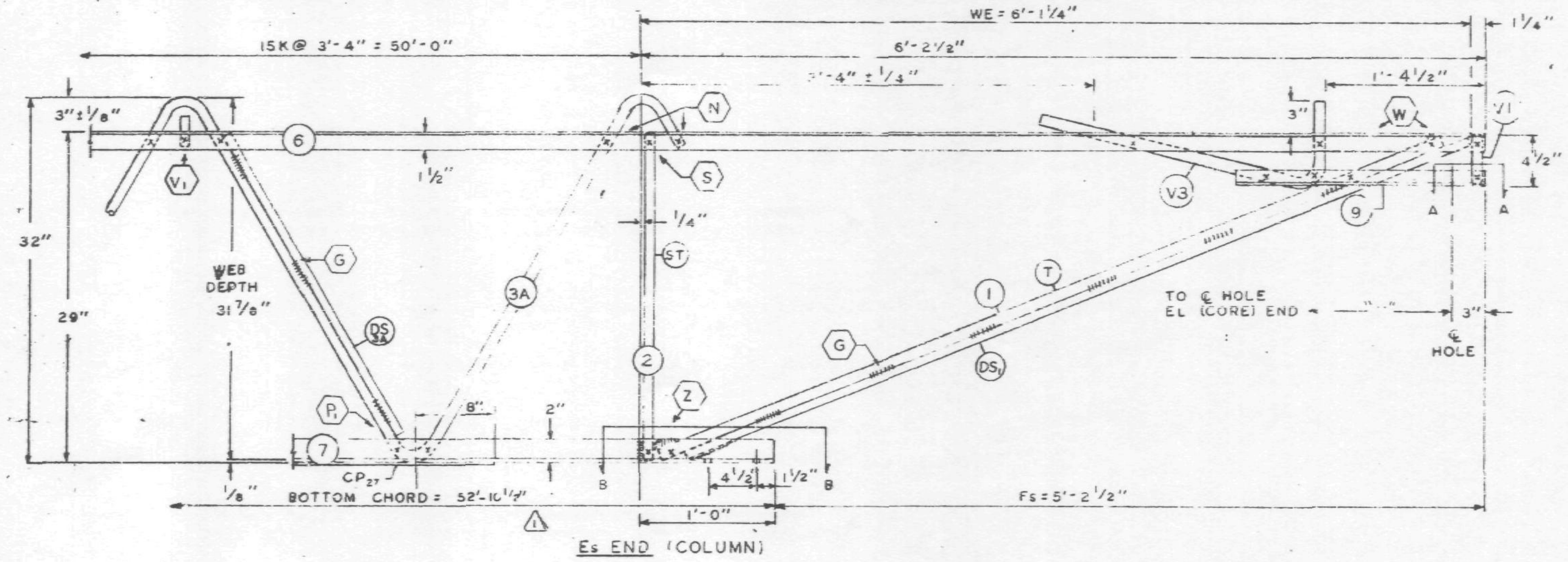

Es END (COLUMN)

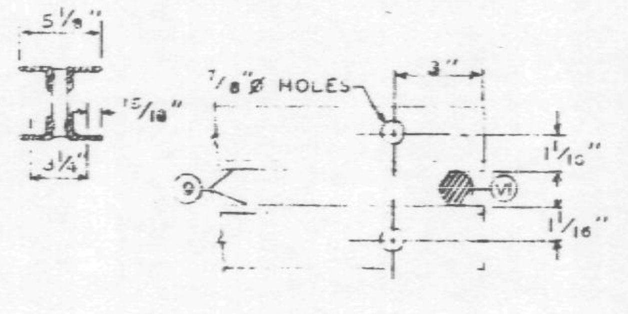

SECTION A-A

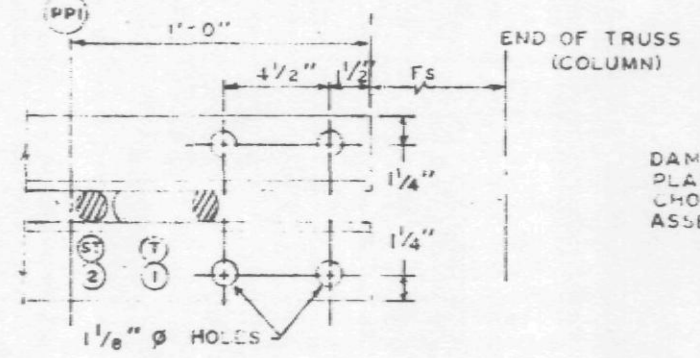

SECTION B-B

ALL PANEL POINTS RESISTANCE WELDED (X)
ARC WELDS INDICATED AT SHADED AREAS AND AT BOTTOM CHORD WEB SPLICES
ALL WELD DETAILS SHOWN ON SHEETS ST290, ST291, ST292, ST293, ST294 & ST 287. (3)

CHORD PLATE DETAILS SHOWN ON SHEET ST287.
SEE SHEET ST295 FOR V1 & V3 DETAILS
LETTERS IN HEXAGON INDICATE WELD DETAILS, i.e., (A)
LETTERS AND NUMBERS IN SQUARES INDICATE RESISTANCE WELD STRENGTH IDENTIFIED IN THE QUALITY CONTROL PROGRAM, i.e., R-1

DAMPING UNIT CONNECTION PLATE ATTACHED TO BOTTOM CHORD (COL. END) IN FIELD ASSEMBLY BY CONTRACT W.T.C. 223.00.

FABRICATION REQUIREMENTS	DESIGN	TOLERANCE
CAMBER AT MIDSPAN	2"	3/8"
DESIGN DEPTH	29"	± 1/4"
PANEL "K"	3'-4"	± 1/4"
OVERALL LENGTH	59'-0¾"	± 3/8"
WEB DEPTH	31 7/8"	± 1/4

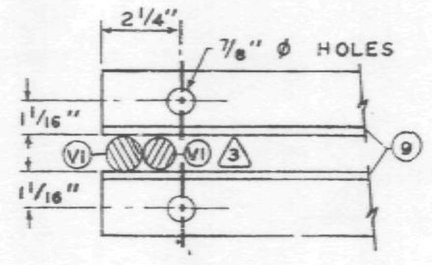

SECTION C-C

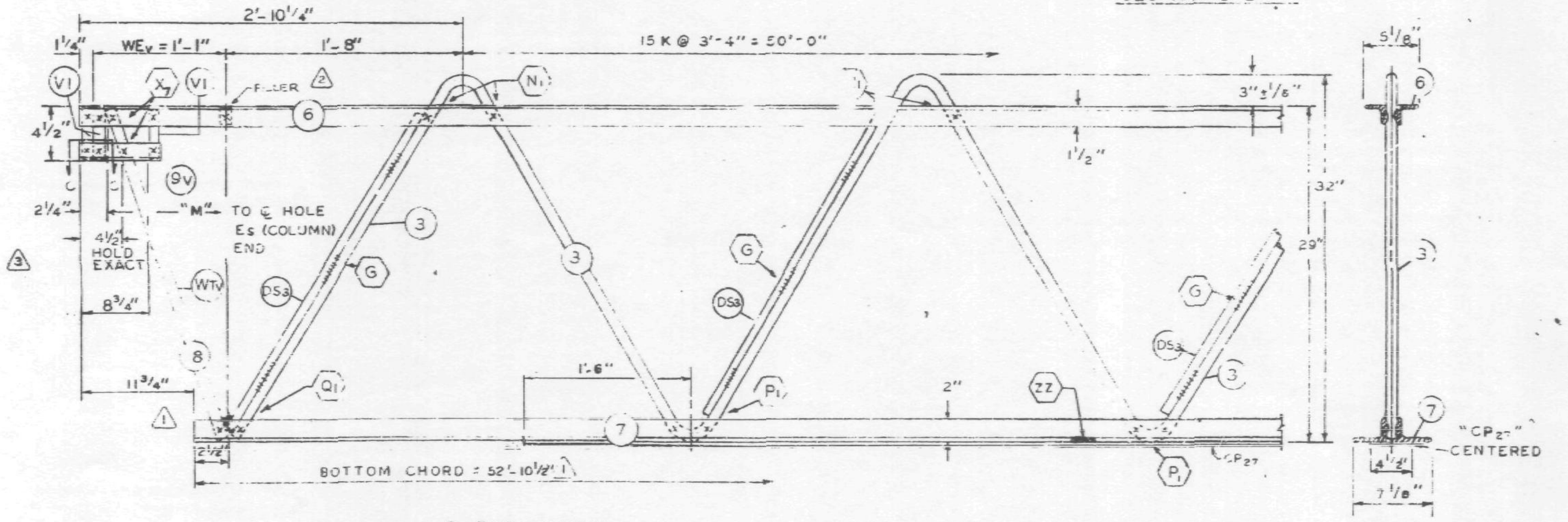

EL END (CORE)

NO.	DATE	REVISION	BY
3	3-3-69	AS NOTED	G.D.C.
2	2-18-69	AS NOTED	T.M.C.
1	1-31-69	AS NOTED	G.D.C.

REF. DRWG.

7-AB1-28	1-6-68
7-AB1-52	2-15-68
7-AB4-14	1-3-68
7-AB1-54	11-25-68
7-AB1-53	7-22-68
7-AB3-70	11-25-68

PAINT
LACLEDE ELECTROCOAT
RED NO. 10001

TRUSS DESIGNATION	TOP CHORD TWO ANGLES				BOTTOM CHORD TWO ANGLES				MAIN WEB "W"					FILLER		CONNECTION FILLER			CHORD PLATE				HOLES
	MK.	TYPE STEEL	CHORD SIZE	LENGTH	MK.	TYPE STEEL	CHORD SIZE	LENGTH (1)	MK.	TYPE STEEL	DIA.	LENGTH	NO. OF K	NO.	DIA.	NO.	DIA.	LENGTH	MK.	TYPE STEEL	SIZE	LENGTH	
C32T31-59075	6	A242	2"x1½"x.37	59'-0¾"	7	A36	3"x2"x.37"	52'-10½"	3	A242	1.14	56'-0¾"	9K @ 3'-4" = 30'-0"	12	1.14	4	1.14	0'-3"	CP_{27}	A36	4½x.39	48'-10"	58'-1½"
									3A	A242	1.14	40'-11¼"	6½K @ 3'-4" = 21'-8"										

COLUMN END	Es END TRUSS DESIGNATION	BEARING ANGLES				WE	DIAGONAL "T" STRUT				VERTICAL "ST" STRUT				END STIFFENER NO. V1			STEEL			DOUBLE STRUT				DOUBLE STRUT			
		MK.	TYPE STEEL	CHORD SIZE	LENGTH		MK.	TYPE STEEL	DIA.	LENGTH	MK.	TYPE STEEL	DIA.	LENGTH	TYPE STEEL	DIA.	LENGTH	TYPE STEEL	DIA.		MK.	TYPE STEEL	DIA.	LENGTH	MK.	TYPE STEEL	DIA.	LENGTH
	C32T31-59075	9	A242	2"x1½"x.37 (2)	1'-10"	6'-1¼"	1	A242	1.14	6'-3⅛"	2	A242	1.14	2'-4⅞"	A242	1.14	0'-4⅜"	A242	4	2'-[illegible]½	S_1	A242	.92	6'-3⅛"	DS_{3A}	A242	.75	2'-6¾"

CORE END	EL END TRUSS DESIGNATION	BEARING ANGLE				WEv	DOUBLE STRUT				DOUBLE STRUT				END STIFFENER (3) MK. V1			WEB "WCv"					WEB "WTv"				
		MK.	TYPE STEEL	CHORD SIZE	LENGTH		MK.	TYPE STEEL	DIA.	LENGTH (3 REQ'D)	MK.	TYPE STEEL	DIA.	LENGTH	TYPE STEEL	DIA.	LENGTH (3 REQ'D)	MK.	TYPE STEEL	POS.	DIA.	LENGTH	MK.	TYPE STEEL	POS.	DIA.	LENGTH
	C32T31-59075	9v	A242	2"x1½"x.37"	0'-10"	1'-1"	DS_2	A242	.98	2'-6¾"	—	—	—	—	A242	1.14	4⅜"	—	—	—	—	—	8	A242	1	1.14	2'-8¼"

CHECK DIMENSION FOR TRUSS FAB.

LOCATION OF TRANS. TRUSS				
CL-1	CL-2	CL-3	CL-4	Fs
9'-6½"	22'-10½"	36'-2½"	49'-6½"	5'-2½"

STEEL TRUSS DETAILS
FOR
WORLD TRADE CENTER - N.Y.C.
FOR
THE PORT OF NEW YORK AUTHORITY

FLOOR TRUSS C32T31 59'-0¾" OVERALL
WORLD TRADE CENTER TOWERS A-B

FABRICATION BY LACLEDE STEEL COMPANY

FABRICATED AT MADISON, ILLINOIS
APPROVED FOR FABRICATION FOR P.O.N.Y.A. James White DATE 3/10/69
APPROVED FOR FABRICATION BY FOR FABRICATOR DATE
DETAILED BY A. CARL WEHER

DESIGN DRAWING NO. 7-AB1-28
DRAWN BY dee
DATE JAN 21, 1969
CHECKED BY T.M.CH[illegible]
DATE JAN 21, 1969

231

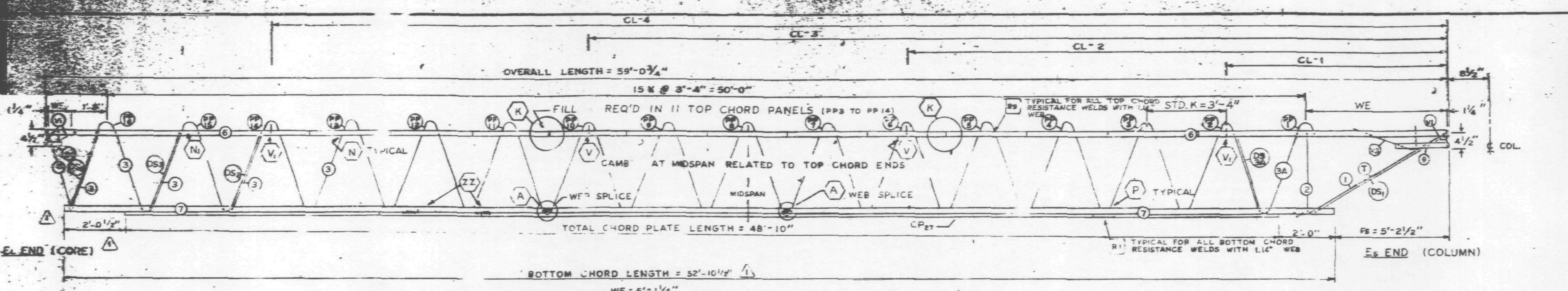

TRUSS ELEVATION

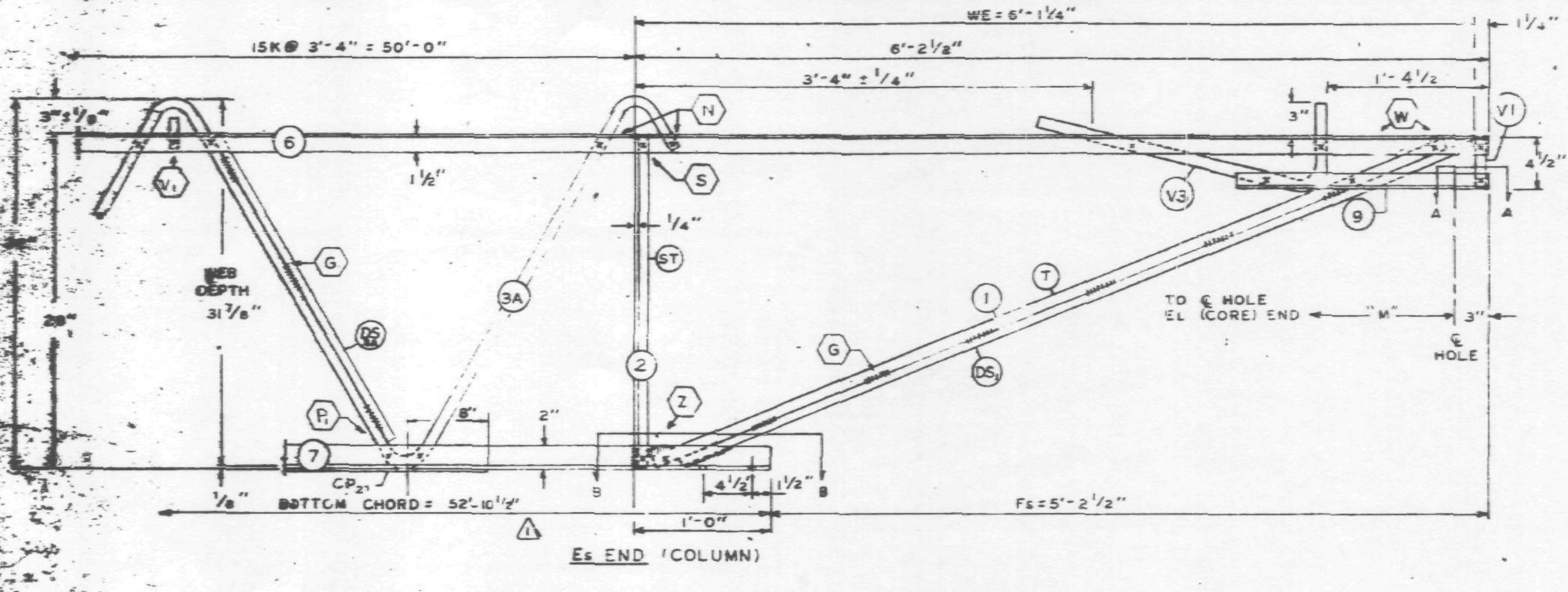

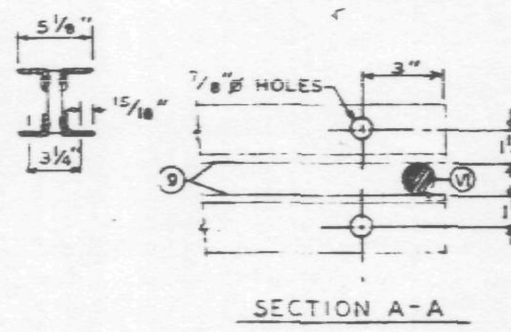

SECTION A-A

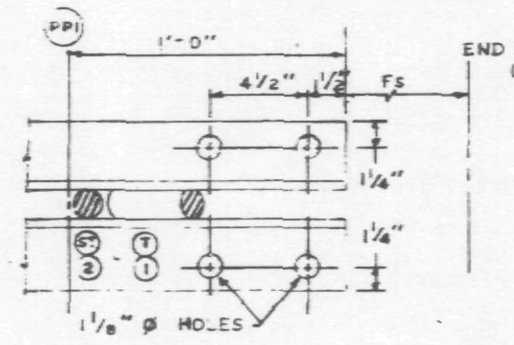

SECTION B-B

ALL PANEL POINTS RESISTANCE WELDED (x)
ARC WELDS INDICATED AT SHADED AREAS AND AT BOTTOM CHORD WEB SPLICES
ALL WELD DETAILS SHOWN ON SHEETS ST290, ST291, ST292, ST293, AND ST287.

CHORD PLATE DETAILS SHOWN ON SHEET ST287.
SEE SHEET ST295 FOR VI & V3 DETAILS
LETTERS IN HEXAGON INDICATE WELD DETAILS, ie., (A)
LETTERS AND NUMBERS IN SQUARES INDICATE RESISTANCE WELD STRENGTH IDENTIFIED IN THE QUALITY CONTROL PROGRAM, ie., [R-1]

DAMPING UNIT CONNECTION PLATE ATTACHED TO BOTTOM CHORD (COL. END) IN FIELD ASSEMBLY BY CONTRACT W.T.C. 223.00.

FABRICATION REQUIREMENTS	DESIGN	TOLERANCE
CAMBER AT MIDSPAN	2"	[illegible]
DESIGN DEPTH		± 1/4'
PANEL K"	3'-4"	± 1/
OVERALL LENGTH	59'-0¾"	/8"
WEB DEPTH	31 7/8"	± 1/4

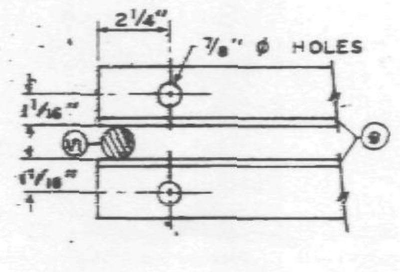

SECTION C-C

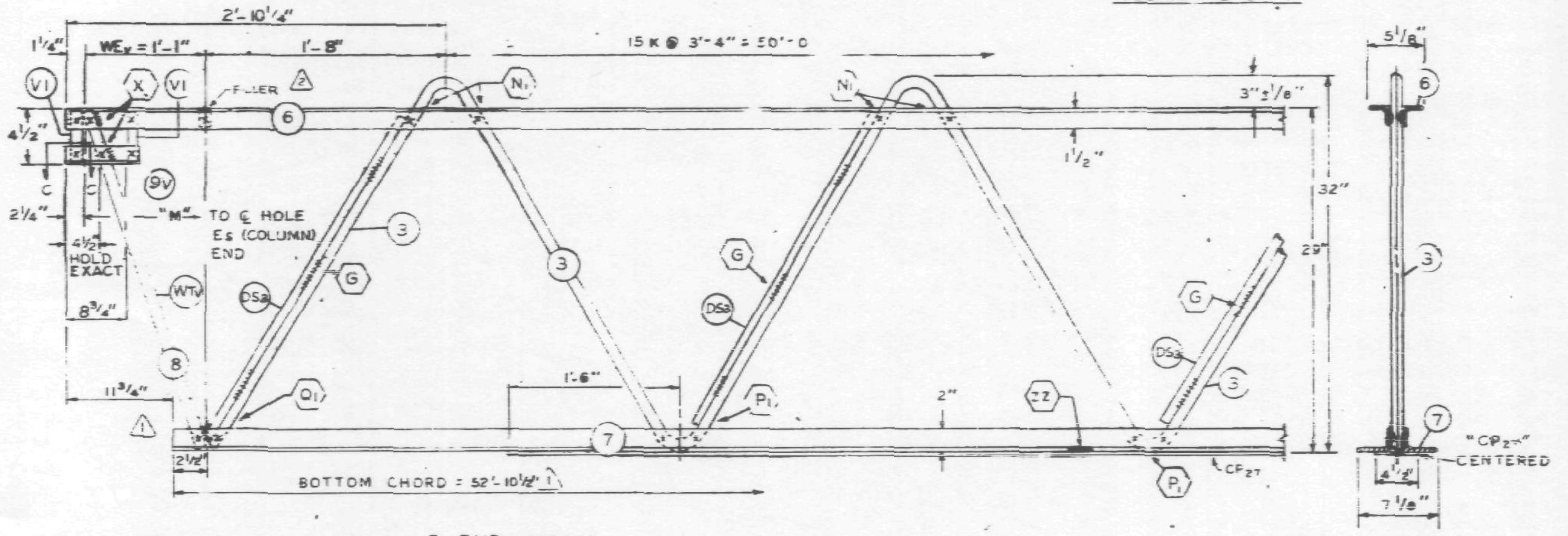

EL END (CORE)

NO.	DATE	REVISION	BY
2	2-18-69	AS NOTED	T.M.C.
1	1-31-69	AS NOTED	G.D.C.

REF. DRWG.

7-ABI-28	1-6-68
7-ABI-52	2-15-68
7-AB4-14	1-3-68
7-ABI-54	11-25-68
7-ABI-53	7-23-68
7-AB3-70	11-25-68

PAINT
LACLEDE ELECTROCOAT
RED NO. 10001

TRUSS DESIGNATION	TOP CHORD TWO ANGLES MK	TYPE STEEL	CHORD SIZE	LENGTH	BOTTOM CHORD TWO ANGLES MK	TYPE STEEL	CHORD SIZE	LENGTH	MAIN WEB "W" MK	TYPE STEEL	DIA	LENGTH	NO. OF K	FILLER NO.	DIA	CONNECTION FILLER NO.	DIA	LENGTH	CHORD PLATE MK	TYPE STEEL	SIZE	LENGTH	M" 7/8 HOLES
C32T31-59075	6	A242	2"x1½"x.37	59'-0¾"	7	A36	3"x2"x.37"	52'-10½"	3 / 3A	A242 / A242	1.14 / 1.14	56'-0¾" / 40'-11¼"	9K @ 3'-4" = 30'-0" / 6½K @ 3'-4" = 21'-8"	12	1.14	4	1.14	0'-3"	CP_{27}	A36	4"x.39	48'-10"	58'-7½"

COLUMN END

Es END TRUSS DESIGNATION	BEARING ANGLES MK	TYPE STEEL	CHORD SIZE	LENGTH	WE	DIAGONAL "T" STRUT MK	TYPE STEEL	DIA	LENGTH	VERTICAL "ST" STRUT MK	TYPE STEEL	DIA	LENGTH	END STIFFENER MK. VI TYPE STEEL	DIA	LENGTH	MK. V3 TYPE STEEL	DIA	LENGTH	DOUBLE STRUT MK	TYPE STEEL	DIA	LENGTH	DOUBLE STRUT MK	TYPE STEEL	DIA	LENGTH
C32T31-59075	9	A242	2"x1½"x.37	1'-10"	6'-1¼"	1	A242	1.14	6'-3⅛"	2	A242	1.14	2'-4⅞"	A242	1.14	0'-4⅜"	A242	1.14	9½"	DS_1	A242	.92	6'-3⅛"	DS_{3a}	A242	.75	2'-6¾"

CORE END

EL END TRUSS DESIGNATION	BEARING ANGLE MK	TYPE STEEL	CHORD SIZE	LENGTH	WE_V	DOUBLE STRUT MK	TYPE STEEL	DIA	LENGTH (3 REQ'D)	DOUBLE STRUT MK	TYPE STEEL	DIA	LENGTH	END STIFFENER MK. VI TYPE STEEL	DIA	LENGTH (2 REQ'D)	WEB "WCV" MK	TYPE STEEL	PCS	DIA	LENGTH	WEB "WTV" MK	TYPE STEEL	PCS	DIA	LENGTH
C32T31-59075	9V	A242	2"x1½"x.37"	0'-10"	1'-1"	DS_2	A242	.98	2'-6¾"	—	—	—	—	A242	1.14	4⅜"	—	—	—	—	—	8	A242	1	1.14	2'-6¼"

CHECK DIMENSION FOR TRUSS FAB.

LOCATION OF TRANS. TRUSS				
CL-1	CL-2	CL-3	CL-4	Fs
9'-6½"	22'-10½"	36'-2½"	49'-6½"	5'-2½"

STEEL TRUSS DETAILS
FOR
WORLD TRADE CENTER - N.Y.C.
FOR
THE PORT OF NEW YORK AUTHORITY

FLOOR TRUSS C32T31 59'-0¾" OVERALL
WORLD TRADE CENTER TOWERS A-B

FABRICATION BY LACLEDE STEEL COMPANY
FABRICATED AT MADISON, ILLINOIS
DESIGN DRAWING NO. 7-ABI-28
PLATE 1
APPROVED FOR FABRICATION BY James [signature] FOR P.O.N.Y.A. DATE 2/24/69
DRAWN BY: [illegible] DATE JAN. 21, 1969
APPROVED FOR FABRICATION BY: FOR FABRICATOR DATE
CHECKED BY: T. ILOKURA DATE JAN. 21, 1969
IN CHARGE OF PROD. REV.
DETAILED BY: A. CARL WEBER
FABRICATION CONT. NO. W.T.C. 221
SHEET NO. ST 231

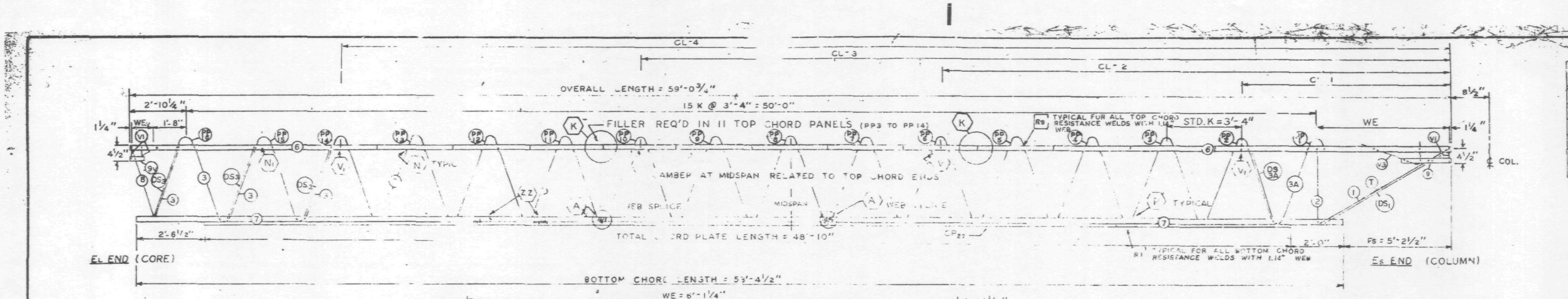

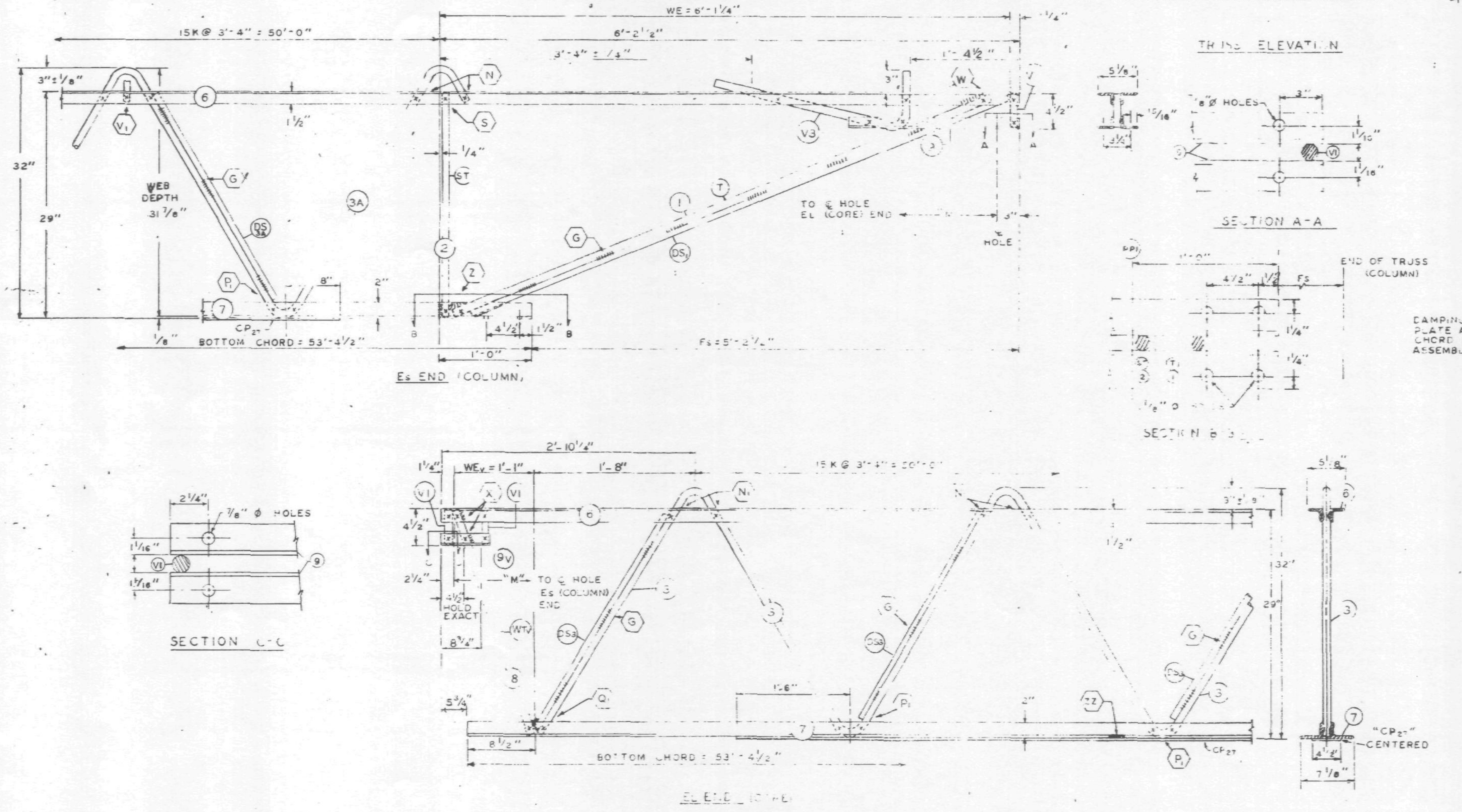

ALL PANEL POINTS RESISTANCE WELDED (x).
ARC WELDS INDICATED AT SHADED AREAS
AND AT BOTTOM CHORD WEB SPLICES
ALL WELD DETAILS SHOWN ON SHEETS ST290, ST291, ST292, ST293, AND ST287.

CHORD PLATE DETAILS SHOWN ON SHEET ST287.
SEE SHEET ST295 FOR V1 & V3 DETAILS
LETTERS IN HEXAGON INDICATE WELD DETAILS, ie., (A)
LETTERS AND NUMBERS IN SQUARES INDICATE RESISTANCE WELD STRENGTH IDENTIFIED IN THE QUALITY CONTROL PROGRAM, ie., [R-1]

DAMPING UNIT CONNECTION PLATE ATTACHED TO BOTTOM CHORD (COL END) IN FIELD ASSEMBLY BY CONTRACT W.T.C. 223.00.

FABRICATION REQUIREMENTS		
	DESIGN	TOLERANCE
CAMBER AT MIDSPAN	2"	± 3/9"
DESIGN DEPTH	29"	± 1/4"
PANEL "K"	3'-4"	± 1/4"
OVERALL LENGTH	5[illegible]	± 3/8"
WEB DEPTH	31 7/8"	± 1/[illegible]

TRUSS DESIGNATION	TOP CHORD TWO ANGLES				BOTTOM CHORD TWO ANGLES				MAIN DIAG "A"									FILLER PLATE				"M" ¾" HOLES
	MK	TYPE STEEL	CHORD SIZE	LENGTH	MK	TYPE STEEL	CHORD SIZE	LENGTH	MK	TYPE STEEL	DIA	LENGTH	[illegible]	[illegible]	[illegible]	[illegible]	LENGTH	MK	TYPE STEEL	SIZE	LENGTH	
C32T31-59075	6	A242	2"x1½"x[illegible]	[illegible]	[illegible]	A36	[illegible]	53'-4½"	3 / 3A	A242 / A242	1.14 / 1.14	56'-0¾" / [illegible]	9K @ 3'-4" = 30'-0" / [illegible]	[illegible]	1.14	4	1.14	[illegible]'-3" / CP_{27}	A36	[illegible]x.39	48'-10"	59'-[illegible]½"

COLUMN END

Es END	TRUSS DESIGNATION	BEARING ANGLES				WE	[illegible]			[illegible] "STRUT"				[illegible]						DOUBLE STRUT				DOUBLE STRUT			
		MK	TYPE STEEL	CHORD SIZE	LENGTH		MK	TYPE STEEL	DIA LENGTH	MK	TYPE STEEL	DIA	LENGTH	TYPE STEEL	DIA	LENGTH	TYPE STEEL	DIA	LENGTH	MK.	TYPE STEEL	DIA.	LENGTH	MK.	TYPE STEEL	DIA.	LENGTH
	C32T31-59075	9	A242	2"x1½"x.25	[illegible]10"	6'-1¼"	[illegible]	A242	1.14 6'-3⅛"	3	A242	1.14	[illegible]4⅞"	A242	1.14	[illegible]4⅜"	[illegible]	1.14	2'-9¾"	DS_1	A242	.92	6'-3⅛"	DS_{3A}	A242	.75	2'-6¾"

CORE END

EL END	TRUSS DESIGNATION	BEARING ANGLE				WEv	DOUBLE STRUT				"DOUBLE STRUT"				END STIFFENER			WEB "WCV"					WEB "WTV"				
		MK	TYPE STEEL	CHORD SIZE	LENGTH		MK	TYPE STEEL	DIA	LENGTH (3 REQ'D)	MK	TYPE STEEL	DIA	LENGTH	TYPE STEEL	DIA	LENGTH (2 REQ'D)	MK	TYPE STEEL	[illegible]	[illegible]	LENGTH	MK	TYPE STEEL	[illegible]	DIA	LENGTH
	C32T31-59075	9V	A242	2"x1½"x.37"	0'-10"	1'-1"	DS_3	A242	.98	2'-6¾"	—	—	—	—	A242	1.14	4⅜"	—	—	—	—	—	8	A242	1	1.14	2'-6¼"

CHECK DIMENSION FOR TRUSS FAB.

LOCATION OF TRANS. TRUSS				
CL-1	CL-2	CL-3	CL-4	Fs
9'-6½"	22'-10½"	36'-2½"	49'-6½"	5'-2½"

NO.	DATE	REVISION	BY

VOID.

REF. DRWG.

7-AB1-28	1-6-68
7-AB1-52	2-15-68
7-AB4-14	1-3-68
7-AB1-94	11-25-68
7-AB1-53	7-22-68
7-AB3-70	11-25-68

PAINT
LACLEDE ELECTROCOAT
RED NO. 10001

STEEL TRUSS DETAILS
FOR
WORLD TRADE CENTER - N.Y.C.
FOR
THE PORT OF NEW YORK AUTHORITY

FLOOR TRUSS C32T31 59'-0¾" OVERALL
WORLD TRADE CENTER TOWERS A-B

FABRICATION BY LACLEDE STEEL COMPANY
FABRICATED AT MADISON, ILLINOIS
DESIGN DRAWING NO. 7-AB1-28
PLATE
APPROVED FOR FABRICATION BY ______ FOR P.O.N.Y.A. DATE ______
DRAWN BY Lee DATE JAN. 21, 1969
APPROVED FOR FABRICATION BY ______ FOR FABRICATOR DATE ______
CHECKED BY T.M. CHURA DATE JAN. 21, 1969
IN CHARGE OF PROD. DEV.
DETAILED BY A. CARL WEBER
FABRICATION CONT. NO. W.T.C. 221
SHEET NO. ST 231

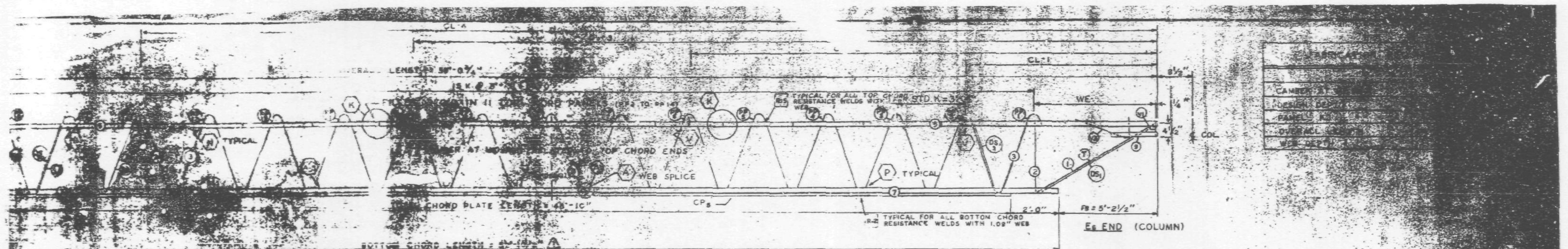

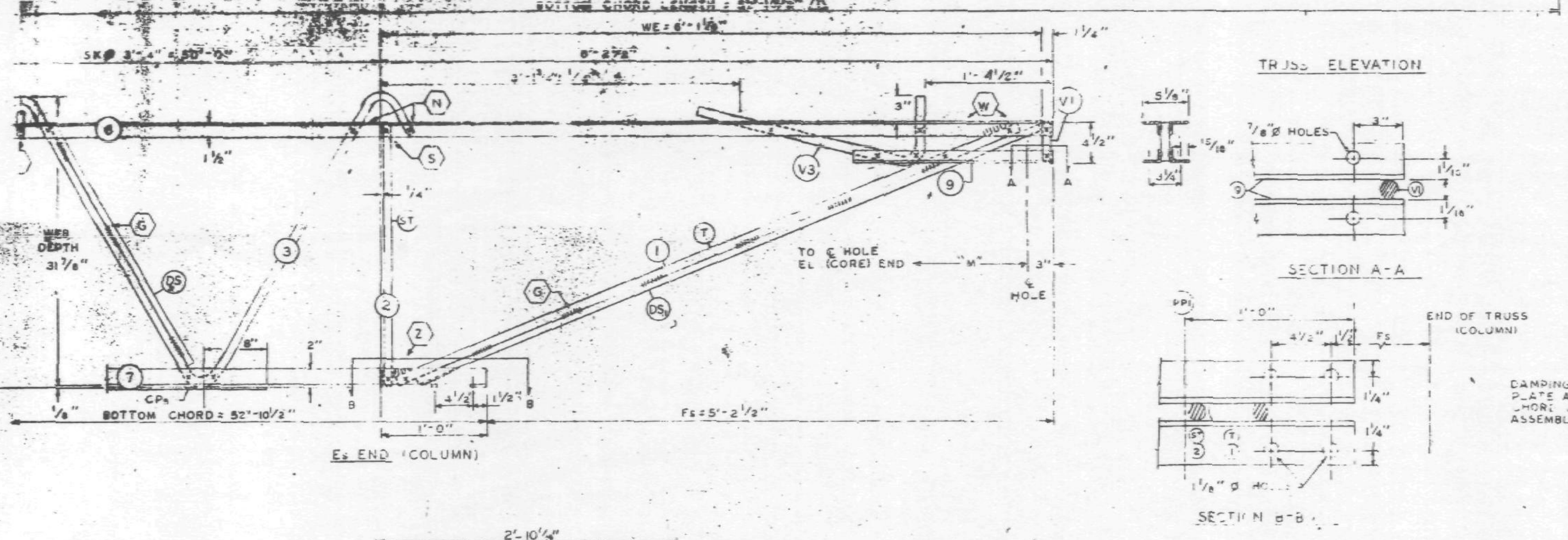

DAMPING UNIT CONNECTION PLATE ATTACHED TO BOTTOM CHORD (COL. END) IN FIELD ASSEMBLY BY CONTRACT W.T.C. 223.00.

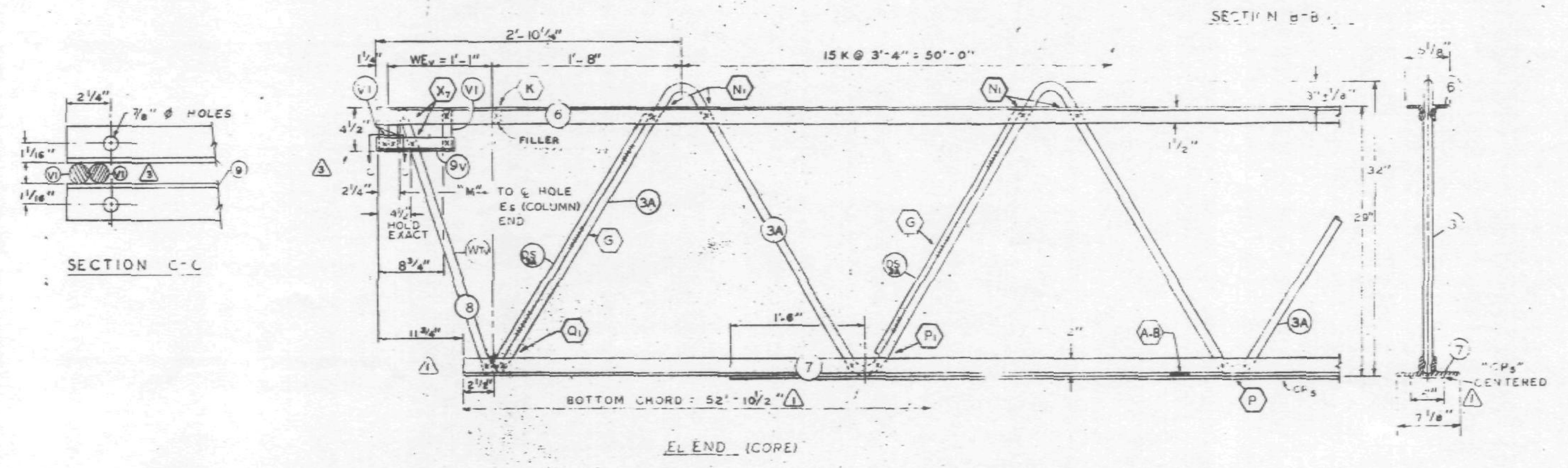

ALL PANEL POINTS RESISTANCE WELDED (x)
ARC WELDS INDICATED AT SHADED AREAS AND AT BOTTOM CHORD WEB SPLICES
ALL WELD DETAILS SHOWN ON SHEETS ST290, ST291, ST292, ST293, ST 294 & ST 286. (3)

CHORD PLATE DETAILS SHOWN ON SHEET ST288.
SEE SHEET ST295 FOR V1 & V3 DETAILS
LETTERS IN HEXAGON INDICATE WELD DETAILS, ie. (A)
LETTERS AND NUMBERS IN SQUARES INDICATE RESISTANCE WELD STRENGTH IDENTIFIED IN THE QUALITY CONTROL PROGRAM, ie., [R-2]

NO.	DATE	REVISION	BY
4	3-11-69	AS NOTED	G.D.C.
3	3-3-69	AS NOTED	G.D.C.
2	2-18-69	AS NOTED	T.M.C.
1	1-29-69	AS NOTED	T.M.C.

REF. DRWG.

7-AB1-29	1-6-68
7-AB1-52	2-15-68
7-AB6-14	1-3-68
7-AB1-54	11-25-68
7-AB1-53	7-22-68
7-AB3-70	11-25-68

PAINT
LACLEDE ELECTROCOAT RED NO 10001

TRUSS DESIGNATION	TOP CHORD TWO ANGLES				BOTTOM CHORD TWO ANGLES				MAIN WEB "W" (2)					FILLER		CONNECTION FILLER (2)			CHORD PLATE				"M" % HOLES
	MK.	TYPE STEEL	CHORD SIZE	LENGTH	MK.	TYPE STEEL	CHORD SIZE	LENGTH (1)	MK.	TYPE STEEL	DIA.	LENGTH	NO. OF K	NO.	DIA.	NO.	DIA.	LENGTH	MK.	TYPE STEEL	SIZE	LENGTH	
C32T32-590'5	6	A242	2"x1½"x.31"	59'-0¾"	7	A36	3"x2"x.37"	52'-10½"	3	A36	1.09	78'-3¾"	12½K@ 3'-4" = 41'-8"	12	1.09	3	1.09	0'-3"	CP5	A36	4"x⅜"	48'-10"	58'-7½"
									3A	A242	1.14	18'-6¼"	3 K@ 3'-4" = 10'-0"			1	1.14	0'-3"					

COLUMN END

Es E	TRUSS DESIGNATION	BEARING ANGLES				WE	DIAGONAL "T" STRUT				VERTICAL "ST" STRUT				END STIFFENER MK. V1			END STIFFENER MK. V3			DOUBLE STRUT				DOUBLE STRUT			
		MK.	TYPE STEEL	CHORD SIZE	LENGTH		MK.	TYPE STEEL	DIA.	LENGTH	MK.	TYPE STEEL	DIA.	LENGTH	TYPE STEEL	DIA.	LENGTH	TYPE STEEL	DIA.	LENGTH	MK.	TYPE STEEL	DIA.	LENGTH	MK.	TYPE STEEL	DIA.	LENGTH
	C32T32-59075	9	A242	2"x1½"x37 (2)	2'-5"	6'-1¼"	1	A242	1.14	6'-3⅛"	2	A242	1.14	2'-4⅞"	A242	1.14	0'-[illegible]⅜"	A242	1.14	2'-8½"	DS1	A242	.75	6'-3⅛"	DS3	A242	.75	2'-6¾"

CORE END

El END	TRUSS DESIGNATION	BEARING ANGLE				WEV	DOUBLE STRUT				DOUBLE STRUT				END STIFFENER (3) MK. V1			WEB "WCV"					WEB "WTV"				
		MK.	TYPE STEEL	CHORD SIZE	LENGTH		MK.	TYPE STEEL	DIA.	LENGTH (2 REQ'D)	MK.	TYPE STEEL	DIA.	LENGTH	TYPE STEEL	DIA.	LENGTH (3 REQ'D)	MK.	TYPE STEEL	PCS	DIA.	LENGTH	MK.	TYPE STEEL	PCS	DIA.	LENGTH
	C32T32-59075	9V	A242	2"x1½"x37 (2)	0'-10"	1'-1"	DS3A	A242	.75	2'-6¾"	—	—	—	—	A242	1.14	4¾"	—	—	—	—	—	8	A242	1	1.14	2'-6¼"

CHECK DIMENSION FOR TRUSS FAB.

LOCATION OF TRANS. TRUSS				
CL-1	CL-2	CL-3	CL-4	Fs
9'-6½"	22'-10½"	36'-2½"	49'-6½"	5'-2½"

STEEL TRUSS DETAILS
FOR
WORLD TRADE CENTER - N.Y.C.
FOR
THE PORT OF NEW YORK AUTHORITY

FLOOR TRUSS C32T32 59'-0¾" OVERALL
WORLD TRADE CENTER TOWERS A-B

FABRICATION BY LACLEDE STEEL COMPANY
FABRICATED AT MADISON, ILLINOIS
APPROVED FOR FABRICATION FOR P.O.N.Y.A. DATE 3/24/69
APPROVED FOR FABRICATION FOR FABRICATOR DATE
DETAILED BY: A. CARL WEBER
DESIGN DRAWING NO. 7-AB1-29
DRAWN BY: [illegible] DATE JAN. 21, 1969
CHECKED BY: T.M.CHURA DATE JAN. 21, 1969
FABRICATION CONT. NO. W.T.C. 221
PLATE
IN CHARGE OF PROD. DEV.
SHEET NO. ST 232

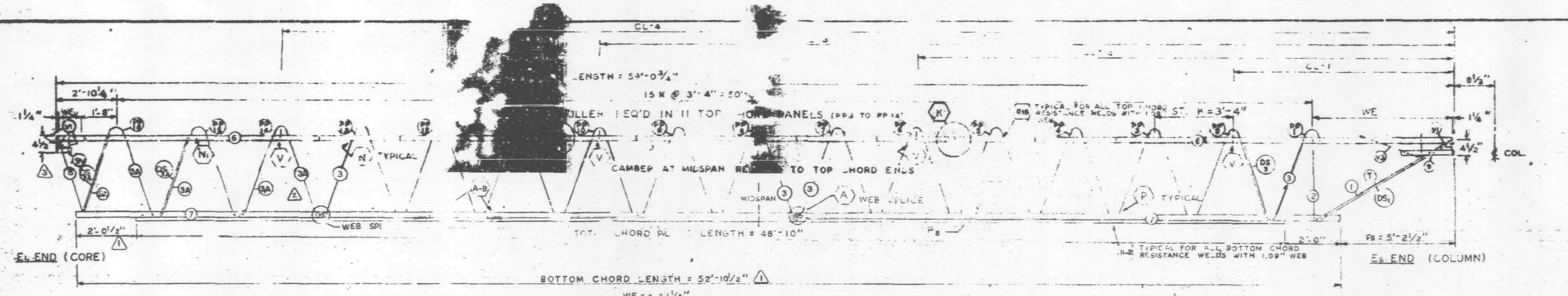

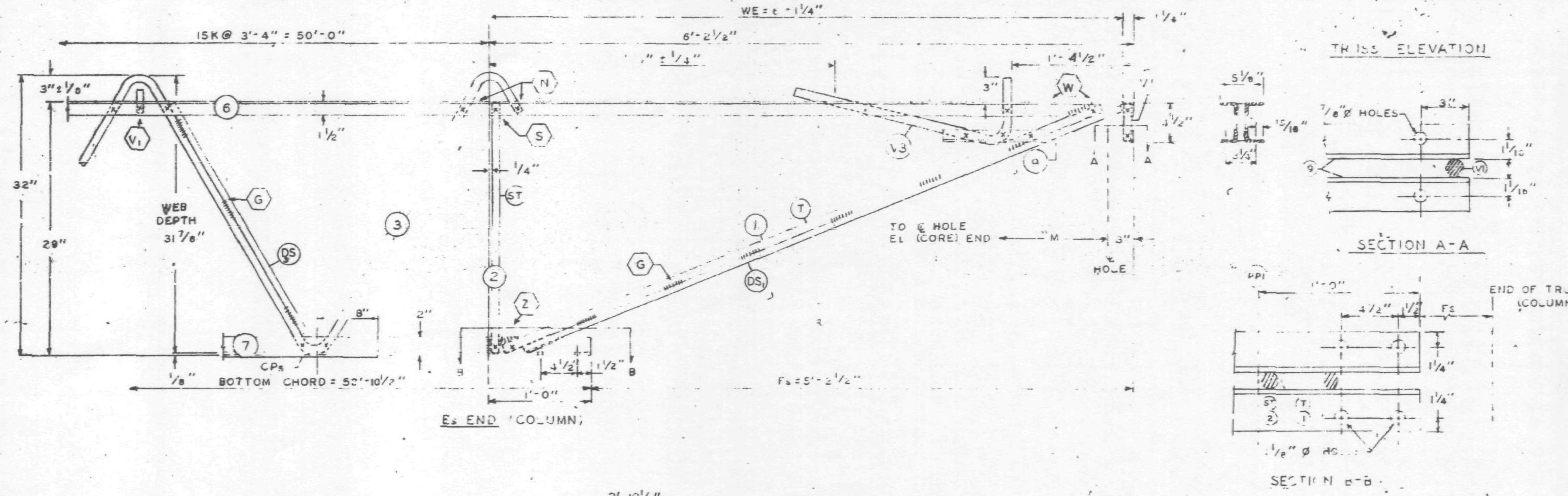

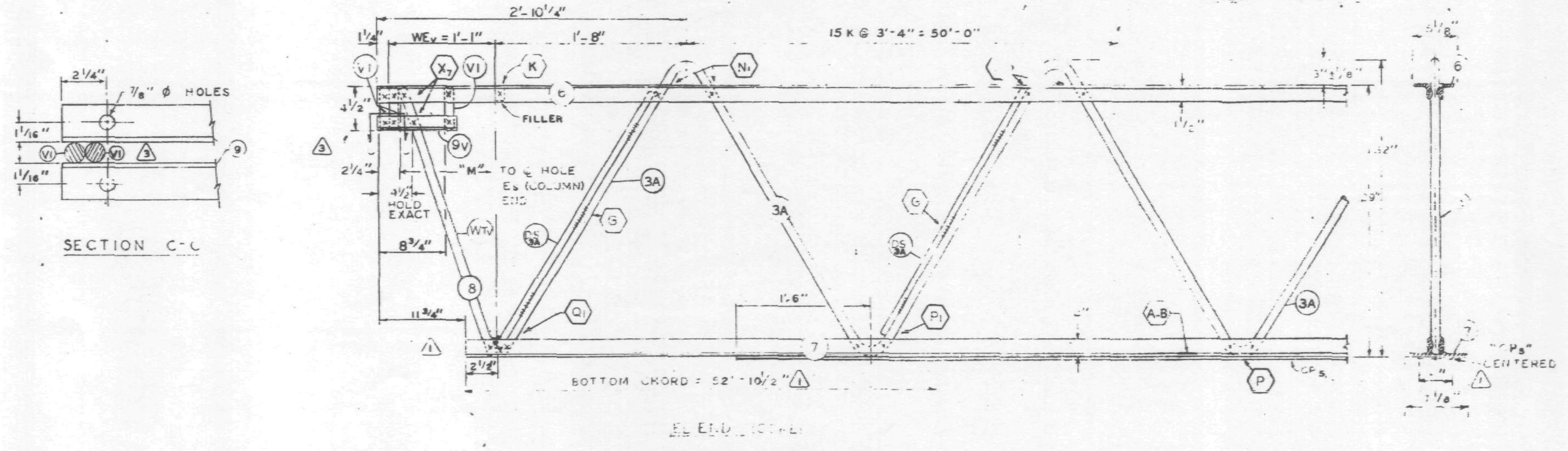

FABRICATION REQUIREMENTS	DESIGN	TOLERANCE
CAMBER AT MIDSPAN	[illegible]	± 1/8"
DESIGN DEPTH	[illegible]	± 1/4"
PANEL "K"	[illegible]	± 1/4"
OVERALL LENGTH	[illegible]	± 3/8"
WEB DEPTH	[illegible]	± 1/4

ALL PANEL POINTS RESISTANCE WELDED (X)
ARC WELDS INDICATED AT SHADED AREAS AND AT BOTTOM CHORD WEB SPLICES
ALL WELD DETAILS SHOWN ON SHEETS ST290, ST291, ST292, ST293, ST294 & ST286. (3)

CHORD PLATE DETAIL SHOWN ON SHEET ST288.
SEE SHEET ST295 FOR VI & V3 DETAILS
LETTERED HEXAGON INDICATE WELD DETAILS, i.e. (A)
LETTERS AND NUMBERS IN SQUARES INDICATE RESISTANCE WELD STRENGTH IDENTIFIED IN THE QUALITY CONTROL PROGRAM, i.e. R-2

DAMPING UNIT CONNECTION PLATE ATTACHED TO BOTTOM CHORD (COL. END) IN FIELD ASSEMBLY BY CONTRACT W.T.C. 223.00.

NO.	DATE	REVISION	BY
3	3-3-69	AS NOTED	G.D.C.
2	2-18-69	AS NOTED	T.M.C.
1	1-29-69	AS NOTED	T.M.C.

REF. DRWG.

7-AB1-29	1-6-68
7-AB1-52	2-15-68
7-AB4-14	1-3-68
7-AB1-54	11-25-68
7-AB1-53	7-22-68
7-AB8-70	11-25-68

PAINT
LACLEDE ELECTROCOAT
RED NO 10001

TRUSS DESIGNATION	TOP CHORD TWO ANGLES MK.	TYPE STEEL	CHORD SIZE	LENGTH	BOTTOM CHORD TWO ANGLES MK.	TYPE STEEL	CHORD SIZE	LENGTH (1)	MK.	TYPE STEEL	DIA.	LENGTH	[illegible]	[illegible]	MK.	DIA.	LENGTH	MK.	TYPE STEEL	[illegible]	LENGTH	[illegible]
C32T32-59075	6	A242	2"x1 1/2"x.31"	59'-[illegible]	7	A36	3"x2"x.37"	52'-10 1/2"	3 / 3A	A36 / A242	1.09 / 1.14	78'-3 3/4" / 18'-8 7/4"	12 K@3'-4" = 41'-8" / 3 K@3'-4" = 10'-0"	[illegible]	3	1.09 / 1.14	0'-3" / 0'-3"	Fs	A36	4 1/2"x 1/8"	48'-10"	[illegible]

COLUMN END

ES END TRUSS DESIGNATION	BEARING ANGLES MK.	TYPE STEEL	CHORD SIZE	LENGTH	WE	DIAGONAL MK.	TYPE STEEL	DIA.	LENGTH	MK.	TYPE STEEL	DIA.	LENGTH	[illegible]	DIA.	LENGTH	[illegible]	[illegible]	LENGTH	DOUBLE STRUT MK.	TYPE STEEL	DIA.	LENGTH	DOUBLE STRUT MK.	TYPE STEEL	DIA.	LENGTH
C32T32-59075	9	A242	2"x1 1/2"x.37	2'-3"	6'-1 1/4"	1	A242	.14	6'-3 1/8"	2	A242	.14	[illegible]	[illegible]	.14	[illegible]-4 1/8"	[illegible]	[illegible]	2'-8 1/2"	[illegible]	A242	.75	6'-3 1/8"	DS₃	A242	.75	2'-6 3/4"

CORE END

EL END TRUSS DESIGNATION	BEARING ANGLE MK.	TYPE STEEL	[illegible]	LENGTH	WEV	DOUBLE STRUT MK.	TYPE STEEL	DIA.	LENGTH (2 REQ'D)	DOUBLE STRUT MK.	TYPE STEEL	DIA.	LENGTH	END STIFFENER (3) TYPE STEEL	[illegible]	3 REQ'D	WEB "WCV" MK.	TYPE STEEL	DIA.	LENGTH	WEB "WTV" MK.	TYPE STEEL	DIA.	LENGTH
C32T32-59075	9V	A242	2"x1 1/2"x.37"	0'-10"	1'-1"	DS3A	A242	.75	2'-8 3/4"	—	—	—	—	A242	1.13	4 3/8"	—	—	—	—	8	A242	1.14	2'-8 1/4"

CHECK DIMENSION FOR TRUSS FAB.

LOCATION OF TRANS. TRUSS				
CL-1	CL-2	CL-3	CL-4	Fs
9'-6 1/8"	22'-10 1/8"	36'-2 1/8"	49'-6 1/8"	5'-2 1/2"

STEEL TRUSS DETAILS
FOR
WORLD TRADE CENTER - N.Y.C.
FOR
THE PORT OF NEW YORK AUTHORITY

FLOOR TRUSS C32T32 59'-0 3/4" OVERALL
WORLD TRADE CENTER TOWERS A-B

FABRICATION BY [illegible] STEEL COMPANY
FABRICATED AT MAD[illegible]
DESIGN DRAWING NO. 7-AB1-29
APPROVED FOR FABRICATION DATE James White 3/10/69
DRAWN BY dec DATE JAN 21, 1969
APPROVED FOR FABRICATION DATE
CHECKED BY T.M. CHURA JAN 21, 1969
IN CHARGE OF PRODUCTION
FABRICATION CONTRACT NO. 2[illegible]
SHEET NO. ST 232

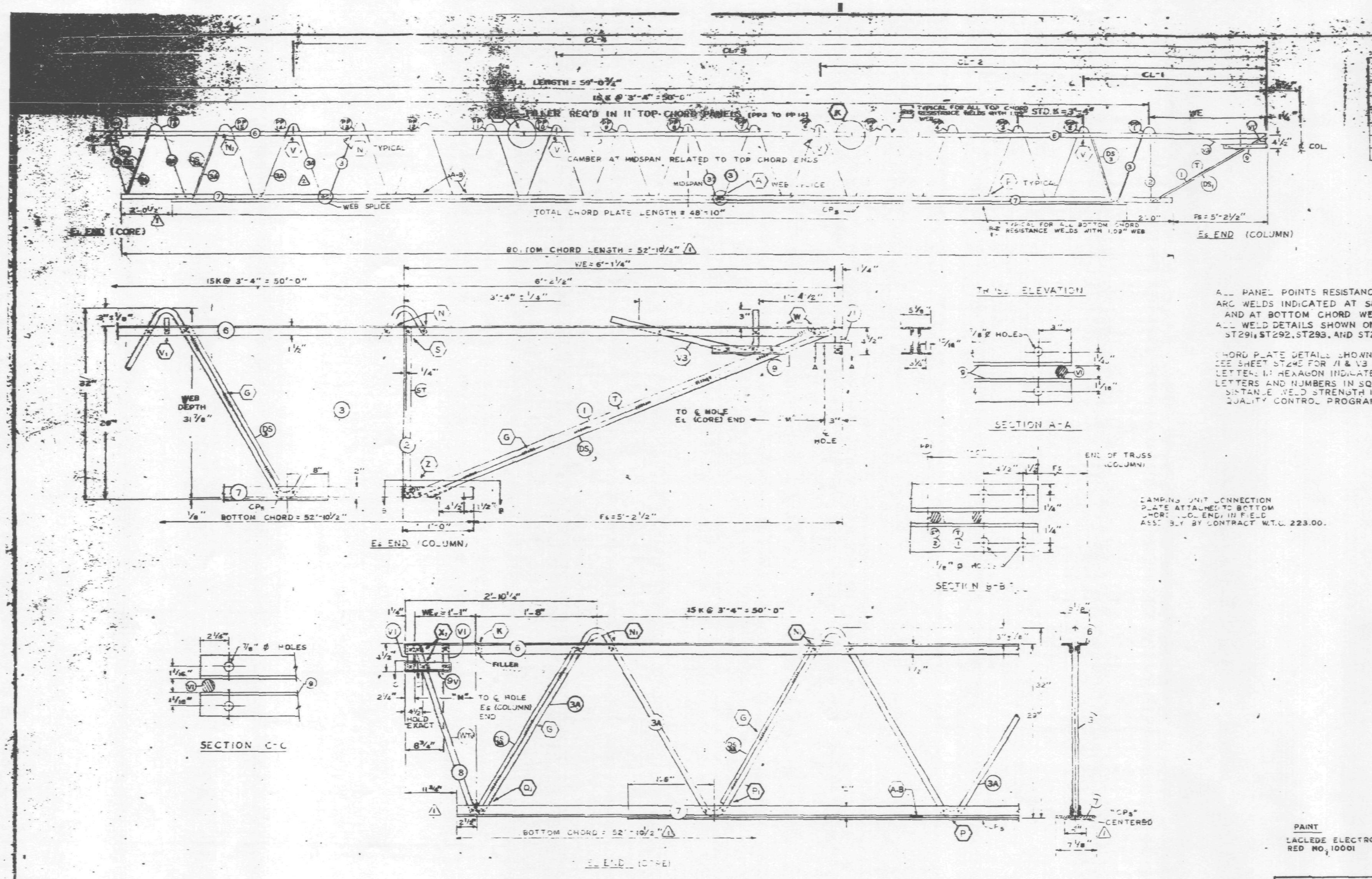

ALL PANEL POINTS RESISTANCE WELDED (x)
ARC WELDS INDICATED AT SHADED AREAS AND AT BOTTOM CHORD WEB SPLICES
ALL WELD DETAILS SHOWN ON SHEETS ST290, ST291, ST292, ST293, AND ST286. (2)

CHORD PLATE DETAILS SHOWN ON SHEET ST288.
SEE SHEET ST295 FOR V1 & V3 DETAILS
LETTERS IN HEXAGON INDICATE WELD DETAILS. i.e. (A)
LETTERS AND NUMBERS IN SQUARES INDICATE RESISTANCE WELD STRENGTH IDENTIFIED IN THE QUALITY CONTROL PROGRAM, i.e. [R-2]

FABRICATION REQUIREMENTS		
[illegible]	[illegible]	[illegible]
CAMBER AT MIDSPAN	[illegible]	[illegible]
DESIGN DEPTH	[illegible]	[illegible]
PANEL "K"	3'-4"	1/4
OVERALL LENGTH	59'-0 3/4"	± 3/8"
WEB DEPTH	31 7/8"	± 1/4

NO.	DATE	REVISION	BY
(2)	2-18-69	AS NOTED	T.H.C.
(1)	1-29-69	AS NOTED	T.H.C.

REF. DRWG.

7-AB1-29	1-6-68
7-AB1-52	2-15-68
7-AB4-14	1-3-68
7-AB1-54	11-25-68
7-AB1-53	7-22-68
7-AB3-70	11-25-68

PAINT
LACLEDE ELECTROCOAT RED NO. 10001

TRUSS DESIGNATION	TOP CHORD TWO ANGLES				BOTTOM CHORD TWO ANGLES				MAIN WEB "A" (2)					FILLER		CONNECTION FILLER (2)			CHORD PLATE				% HOLES
	MK.	TYPE STEEL	CHORD SIZE	LENGTH	MK.	TYPE STEEL	CHORD SIZE	LENGTH (1)	MK.	TYPE STEEL	DIA.	LENGTH	[illegible]	MK.	DIA.	MK.	DIA.	LENGTH	MK.	TYPE STEEL	SIZE	LENGTH	
C32T32-59075	6	A242	2"x1 1/2"x.31"	59'-0 3/4"	7	A36	3"x2"x.37"	52'-10 1/2"	3 / 3A	A36 / A242	1.09 / 1.14	78'-3 3/4" / 18'-8 1/4"	12 1/2 K @ 3'-4" = 41'-8" / 3 K @ 3'-4" = 10'-0"	14	1.09	3 / 1	1.09 / 1.14	0'-3" / 0'-3"	CPs	A36	4 1/2" x 3/8"	48'-10"	[illegible]

COLUMN END

Es END	TRUSS DESIGNATION	BEARING ANGLES				WE	DIAGONAL "X" STRUT				VERTICAL "ST" STRUT				END STIFFENER MK. V1			END STIFFENER MK. V3		DOUBLE STRUT				DOUBLE STRUT			
		MK.	TYPE STEEL	CHORD SIZE	LENGTH		MK.	TYPE STEEL	DIA.	LENGTH	MK.	TYPE STEEL	DIA.	LENGTH	TYPE STEEL	DIA.	LENGTH	TYPE STEEL	LENGTH	MK.	TYPE STEEL	DIA.	LENGTH	MK.	TYPE STEEL	DIA.	LENGTH
	C32T32-59075	9	A242	2"x1 1/2"x.37 (2)	2'-3"	6'-1 1/4"	[illegible]	A242	1.14	6'-3 1/8"	3	A242	1.14	2'-4 7/8"	A242	1.14	0'-4 3/8"	A242	4"	DS1	A242	.75	6'-3 1/8"	DS3	A242	.75	2'-6 3/4"

CORE END

EL END	TRUSS DESIGNATION	BEARING ANGLE				WEV	DOUBLE STRUT				DOUBLE STRUT				END STIFFENER MK. V1			WEB "WCV"					WEB "WTV"				
		MK.	TYPE STEEL	CHORD SIZE	LENGTH		MK.	TYPE STEEL	DIA.	LENGTH (2 REQ'D)	MK.	TYPE STEEL	DIA.	LENGTH	TYPE STEEL	DIA.	LENGTH (2 REQ'D)	MK.	TYPE STEEL	POS.	DIA.	LENGTH	MK.	TYPE STEEL	POS.	DIA.	LENGTH
	C32T32-59075	9V	A242	2"x1 1/2"x.37 (2)	0'-10"	1'-1"	DS3A	A242	.75	2'-6 3/4"	—	——	—	——	A242	1.14	4 3/8"	—	——	—	—	——	8	A242	1	1.14	2'-6 1/4"

CHECK DIMENSION FOR TRUSS FAB.

LOCATION OF TRANS. TRUSS				
CL-1	CL-2	CL-3	CL-4	Fs
9'-6 1/2"	22'-10 1/2"	36'-2 1/2"	49'-6 1/2"	5'-2 1/2"

STEEL TRUSS DETAILS
FOR
WORLD TRADE CENTER - N.Y.C.
FOR
THE PORT OF NEW YORK AUTHORITY

FLOOR TRUSS C32T32 59'-0 3/4" OVERALL
WORLD TRADE CENTER TOWERS A-B

FABRICATION BY LACLEDE STEEL COMPANY

FABRICATED AT MADISON, ILLINOIS		DESIGN DRAWING NO. 7-AB1-29	PLATE
APPROVED FOR FABRICATION BY [signature] FOR P.O.N.Y.A.	DATE 2/24/69	DRAWN BY: [illegible] DATE JAN. 21, 1969	
APPROVED FOR FABRICATION BY: FOR FABRICATOR	DATE	CHECKED BY: T.H. CHURA DATE JAN. 21, 1969	IN CHARGE OF PROD. DEV.
DETAILED BY: A. CARL WEBER	LACLEDE STEEL CO.	FABRICATION CONT. NO. W.T.C. 221	SHEET NO. ST 232

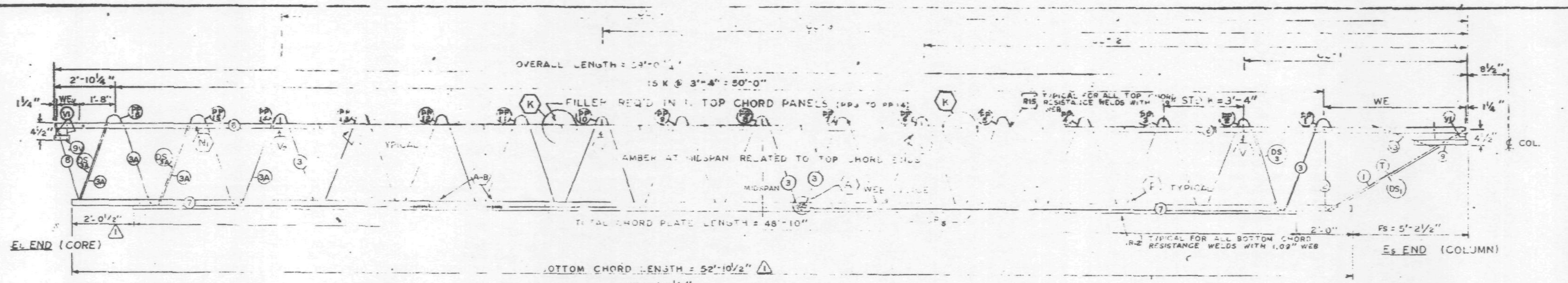

FABRICATION REQUIREMENTS	DESIGN	TOLERANCE
CAMBER AT MIDSPAN	2"	± 3/8"
DESIGN DEPTH	29"	± 1/4"
PANEL K"	3'-4"	± 1/4"
OVERALL LENGTH	59'-0¾"	± 3/8"
WEB DEPTH	31 7/8"	1/4

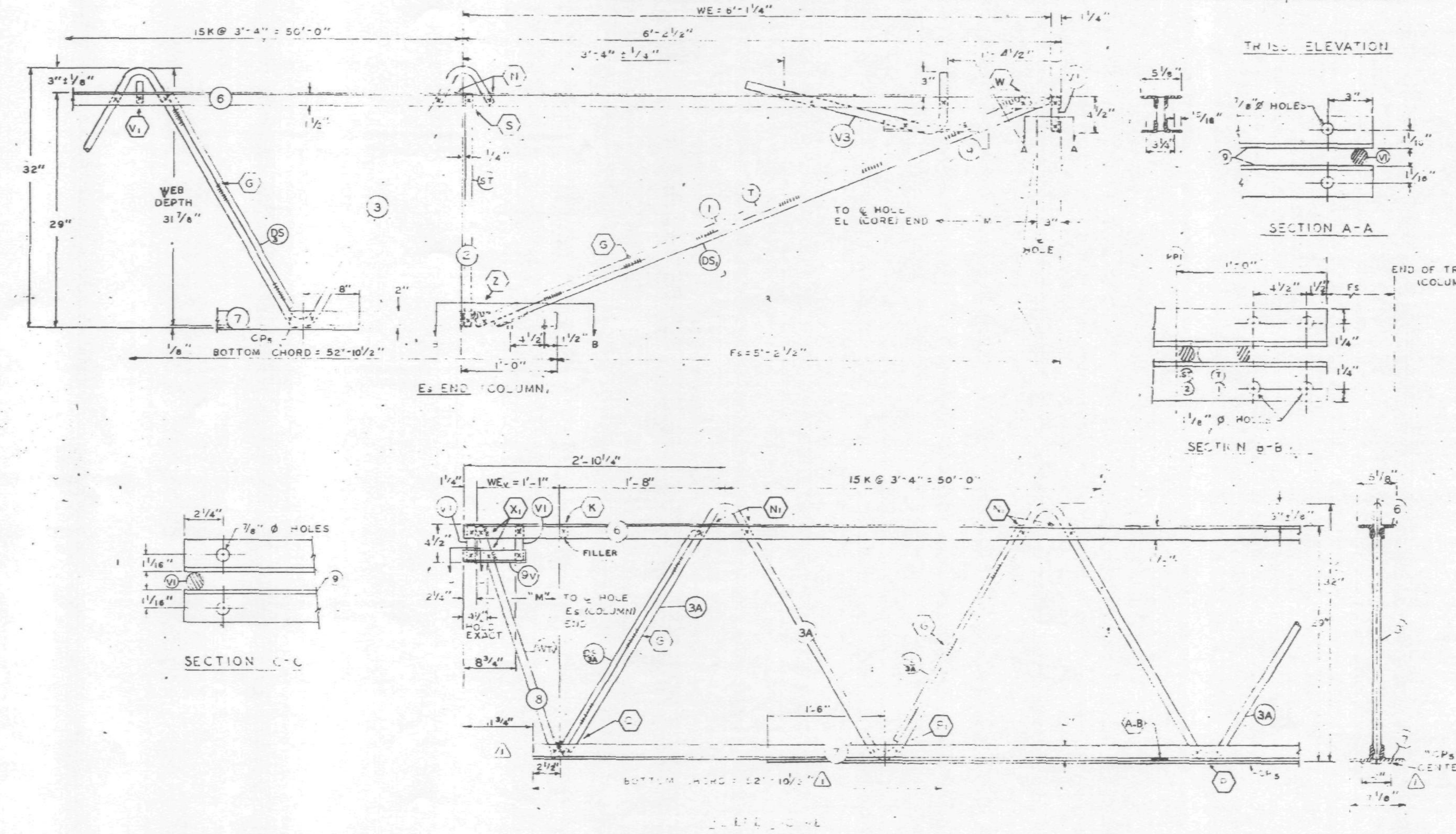

ALL PANEL POINTS RESISTANCE WELDED (x)
ARC WELDS INDICATED AT SHADED AREAS AND AT BOTTOM CHORD WEB SPLICES (IIIIIIII)
ALL WELD DETAILS SHOWN ON SHEETS - ST290, ST291, ST292, ST293, AND ST288.

CHORD PLATE DETAILS SHOWN ON SHEET ST288.
SEE SHEET ST295 FOR VI & V3 DETAILS
LETTERS IN HEXAGON INDICATE WELD DETAILS, ie., ⟨A⟩
LETTERS AND NUMBERS IN SQUARES INDICATE RESISTANCE WELD STRENGTH IDENTIFIED IN THE QUALITY CONTROL PROGRAM, ie., [R-2]

DAMPING UNIT CONNECTION PLATE ATTACHED TO BOTTOM CHORD (COL END) IN FIELD ASSEMBLY BY CONTRACT W.T.C. 223.00.

NO.	DATE	REVISION	BY
△1	1-29-68	AS NOTED	T.M.C.

REF. DRWG.

7-AB1-29	1-6-68
7-AB1-52	2-15-68
7-AB?-14	1-3-68
7-AB1-54	11-25-68
7-AB1-53	7-22-68
7-AB3-70	11-25-68

PAINT
LACLEDE ELECTROCOAT
RED NO. 10001

TRUSS DESIGNATION	TOP CHORD TWO ANGLES MK	TYPE STEEL	CHORD SIZE	LENGTH	[illegible] MK	TYPE STEEL	[illegible] SIZE	LENGTH △1	MK	TYPE STEEL	DIA	LENGTH		[illegible]	[illegible]	[illegible]	[illegible]	[illegible]	MK	TYPE STEEL	SIZE	LENGTH	[illegible]
C32T32-59075	6	A242	2"x1½"x.31"	[illegible]	–	A36	[illegible]x.37"	52'-10½"	3 3A	A36 A242	1.09 1.14	81'-10½" 15'-6⅞"	13 K @ 3'-4" = 43'-4" 2½ K @ 3'-4" = 8'-4"	–	1.14	–	.14	[illegible]	CP5	A36	4⅝"x⅜" △1	48'-10"	[illegible]

COLUMN END

Es END TRUSS DESIGNATION	BEARING ANGLE MK	TYPE STEEL	CHORD SIZE	LENGTH	WE	MK	TYPE STEEL	DIA	LENGTH	MK	TYPE STEEL	DIA	LENGTH	TYPE STEEL	DIA	LENGTH	MK V3 TYPE STEEL	DIA	LENGTH	DOUBLE STRUT MK	TYPE STEEL	DIA	LENGTH	DOUBLE STRUT MK	TYPE STEEL	DIA	LENGTH
C32T32-59075	9	A242	2"x1½"x.25 (.31)	2'-3"	6'-1¼"		A242	1.14	6'-3⅛"	–	A242	1.14	[illegible]	A242	1.14	[illegible]	A242	1.14	2'-9½"	DS₁	A242	.75	6'-3⅛"	DS₃	A242	.75	2'-6¾"

CORE END

El END TRUSS DESIGNATION	BEARING ANGLE MK	TYPE STEEL	CHORD SIZE	LENGTH	WEv	DOUBLE STRUT MK	TYPE STEEL	DIA	LENGTH (2 REQ'D)	DOUBLE STRUT MK	TYPE STEEL	DIA	LENGTH	END STIFFENER MK. VI TYPE STEEL	DIA	LENGTH (2 REQ'D)	WEB "W V" MK	TYPE STEEL	DIA		LENGTH	WEB "RTV" MK	TYPE STEEL		DIA	LENGTH
C32T32-59075	9V	A242	2"x1½"x.31"	0'-10"	1'-1"	DS3A	A242	.75	2'-6¾"	–	—	—	—	A242	1.14	4⅜"	—	—	—	—	—	8	A242		1.14	2'-8¼"

CHECK DIMENSION FOR TRUSS FAB.

LOCATION OF TRANS. TRUSS				
CL-1	CL-2	CL-3	CL-4	Fs
9'-6½"	22'-10½"	36'-2½"	49'-6½"	5'-2½"

SKILLING, HELLE, CHRISTIANSEN, ROBERTSON
Structural & Civil Engineers
X APPROVED AS NOTED
2/19/69 SK

STEEL TRUSS DETAILS
FOR
WORLD TRADE CENTER - N.Y.C.
FOR
THE PORT OF NEW YORK AUTHORITY

FLOOR TRUSS C32T32 59'-0¾" OVERALL
WORLD TRADE CENTER TOWERS A-B

FABRICATION BY LACLEDE STEEL COMPANY

FABRICATED AT MADISON, ILLINOIS	DESIGN DRAWING NO 7-AB1-29	POINTS
APPROVED FOR FABRICATION BY ____ FOR PONYA DATE	DRAWN BY dec DATE JAN. 21, 1969	
APPROVED FOR FABRICATION BY ____ FOR FABRICATOR DATE LACLEDE STEEL CO.	CHECKED BY T.M.CHURA DATE JAN 21, 1969	IN CHARGE OF PROD. DEV.
DETAILED BY A CARL WEBER	FABRICATION CONT NO W.T.C. 221	SHEET NO ST 232

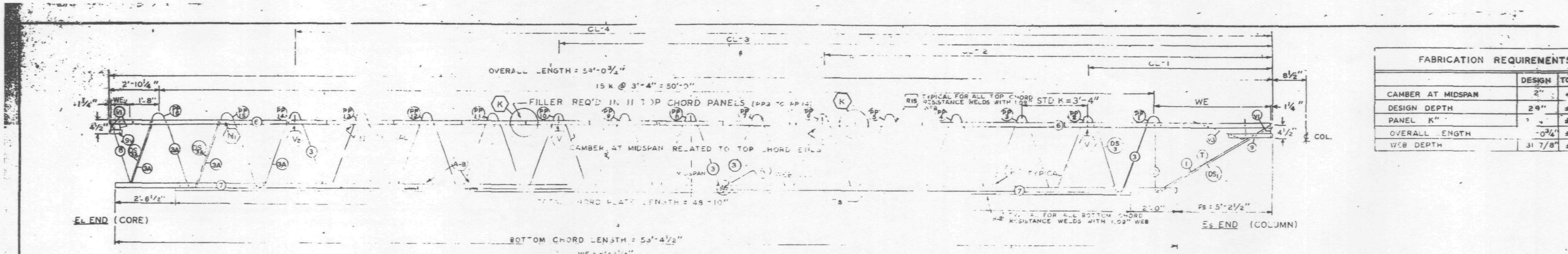

FABRICATION REQUIREMENTS	DESIGN	TOLERANCE
CAMBER AT MIDSPAN	2"	+ 3/8"
DESIGN DEPTH	29"	± 1/4"
PANEL K"	[illegible]	± 1/4"
OVERALL LENGTH	-0 3/4"	± 3/8"
WEB DEPTH	31 7/8"	± 4

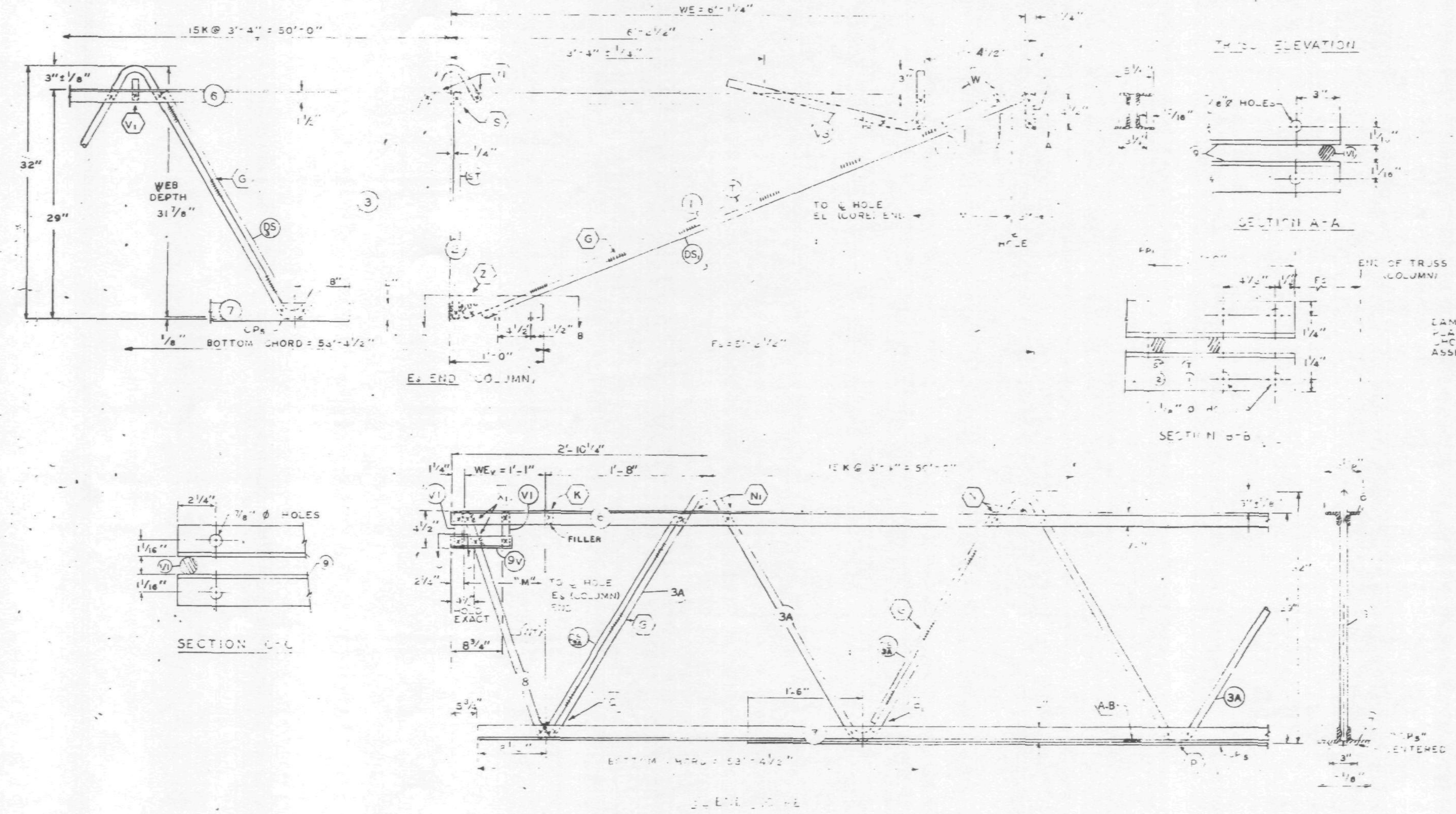

ALL PANEL POINTS RESISTANCE WELDED (x)
ARC WELDS INDICATED AT SHADED AREAS AND AT BOTTOM CHORD WEB SPLICES
ALL WELD DETAILS SHOWN ON SHEETS ST290, ST291, ST292, ST293, AND ST288.

CHORD PLATE DETAILS SHOWN ON SHEET ST288.
SEE SHEET ST2?? FOR V1 & V3 DETAILS
LETTERS IN HEXAGON INDICATE WELD DETAILS, i.e. (A)
LETTERS AND NUMBERS IN SQUARES INDICATE RESISTANCE WELD STRENGTH IDENTIFIED IN THE QUALITY CONTROL PROGRAM, i.e. [R-2]

DAMPING UNIT CONNECTION PLATE ATTACHED TO BOTTOM CHORD (COL END) IN FIELD ASSEMBLY BY CONTRACT W.T.C. 223.00.

NO.	DATE	REVISION	BY

VOID

REF. DRWG.	
7-A81-29	11-6-68
7-A81-52	11-15-68
7-A84-14	11-3-68
7-A81-54	11-25-68
7-A81-53	7-22-68
7-A83-70	11-25-68

PAINT
LACLEDE ELECTROCOAT
RED NO. 10001

TRUSS DESIGNATION	MK.	TYPE STEEL	SIZE	LENGTH																	
C32T32-59075	6	A242	2" x 1 1/2" x .31"	[illegible]	[illegible]	A242	[illegible] x .37"	53'-4 1/2"	3 / 3A	A36 / A242	1.09 / 1.14	81'-10 1/2" / 15'-6 7/8"	13 K 3'-4" = 43'-4" / 2 1/2 K 3'-4" = 8'-4"	[illegible]	.14	[illegible]	.14	[illegible]	Fs [illegible]	3" x 1/4"	48'-10"

COLUMN END	Es END	TRUSS DESIGNATION	MK.	TYPE STEEL	CHORD SIZE	LENGTH													DOUBLE STRUT MK.	TYPE STEEL	DIA.	LENGTH	DOUBLE STRUT MK.	TYPE STEEL	DIA.	LENGTH
		C32T32-59075	9	A242	2" x 1 1/2" x .25"	2'-3"	[illegible]	A242	.14	6'-3 1/8"	A242	.14	[illegible]	[illegible]	[illegible]	[illegible]	.14	[illegible]	DS1	A242	.75	6'-3 1/8"	DS3	A242	.75	2'-6 3/4"

CORE END	EL END	TRUSS DESIGNATION	BEARING ANGLE MK.	TYPE STEEL	SIZE		WEv	DOUBLE STRUT	TYPE STEEL	DIA.	LENGTH (2 REQ'D)	DOUBLE STRUT MK.	TYPE STEEL	DIA.	LENGTH	END STIFFENER TYPE STEEL		(2 REQ'D)	WEB "WCV" MK.	TYPE STEEL			LENGTH	WEB "WTV" MK.	TYPE STEEL		DIA.	LENGTH
		C32T32-59075	9V	A242	2" x 1 1/2" x .31"	0'-10"	1'-1"	DS3A	A242	.75	2'-5 3/4"	—	—	—	—	A242	.14	4 3/8"	—	—	—	—	—	8	A242	[illegible]	.14	2'-6 1/4"

CHECK DIMENSION FOR TRUSS FAB.

LOCATION OF TRANS. TRUSS				
CL-1	CL-2	CL-3	CL-4	Fs
9'-6 1/2"	22'-10 1/2"	36'-2 1/2"	49'-6 1/2"	5'-2 1/2"

STEEL TRUSS DETAILS
FOR
WORLD TRADE CENTER - N.Y.C.
FOR
THE PORT OF NEW YORK AUTHORITY

FLOOR TRUSS C32T32 59'-0 3/4" OVERALL
WORLD TRADE CENTER TOWERS A-8

FABRICATION BY LACLEDE STEEL COMPANY

FABRICATED AT MADISON, ILLINOIS		DESIGN DRAWING NO. 7-A81-29	PLATE
APPROVED FOR FABRICATION BY ____ FOR P. N. Y. A.	DATE	DRAWN BY dec DATE JAN. 21, 1969	
APPROVED FOR FABRICATION BY ____ FOR FABRICATOR	DATE	CHECKED BY T.M. CHURA DATE JAN. 21, 1969	IN CHARGE OF PROD. DEV.
DETAILED BY A. CARL WEBER		FABRICATION CONT. NO. W.T.C. 221	SHEET NO. ST 232

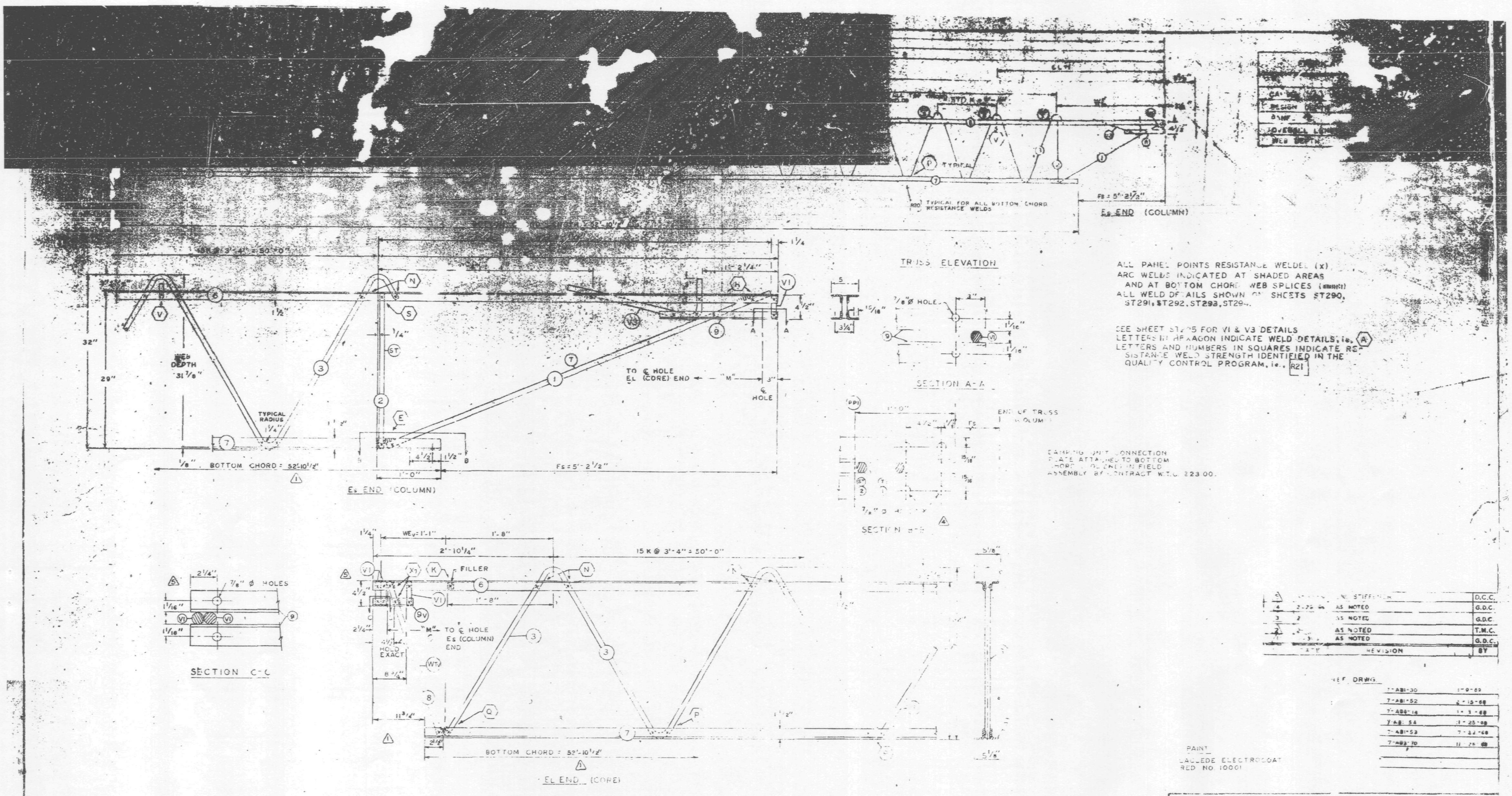

ALL PANEL POINTS RESISTANCE WELDED (x).
ARC WELDS INDICATED AT SHADED AREAS
AND AT BOTTOM CHORD WEB SPLICES
ALL WELD DETAILS SHOWN ON SHEETS ST290, ST291, ST292, ST293, ST294.

SEE SHEET ST295 FOR VI & V3 DETAILS
LETTERS IN HEXAGON INDICATE WELD DETAILS, ie. (A)
LETTERS AND NUMBERS IN SQUARES INDICATE RESISTANCE WELD STRENGTH IDENTIFIED IN THE QUALITY CONTROL PROGRAM, ie. [R21]

DAMPING UNIT CONNECTION PLATE ATTACHED TO BOTTOM CHORD [illegible] IN FIELD ASSEMBLY BY CONTRACT W.T.C. 223.00.

5		[illegible] STIFFENER	D.C.C.
4	2-26-69	AS NOTED	G.D.C.
3	2	AS NOTED	G.D.C.
2		AS NOTED	T.M.C.
1		AS NOTED	G.D.C.
	DATE	REVISION	BY

REF. DRWG.

7-ABI-30	1-9-69
7-ABI-52	2-15-68
7-AB4-14	1-3-68
7-ABI-54	11-25-68
7-ABI-53	7-22-68
7-AB3-70	11-25-68

PAINT
LACLEDE ELECTROCOAT
RED NO. 10001

TRUSS DESIGNATION	TOP CHORD TWO ANGLES				BOTTOM CHORD TWO ANGLES				MAIN WEB "A"					FILLER		CONNECTION FILLER		[illegible]				7/8" ø HOLES
	MK	TYPE STEEL	CHORD SIZE	LENGTH	MK	TYPE STEEL	CHORD SIZE	LENGTH	MK	TYPE STEEL	DIA	LENGTH	[illegible]	[illegible]	DIA	NO.	DIA	LENGTH	MK	TYPE STEEL	[illegible]	LENGTH
C32T33-59075	6	A242	2"x1 1/2"x.25"	59'-0 3/4"	7	[illegible]	2"x1 1/2"x.25"	52'-10 1/2"	[illegible]	A36	1.09	97'-0"	15 1/2 K @ 3'-4" = 51'-8"	11	1.09	4	1.09	0'-3"	—	—	—	—	58 [illegible]

COLUMN END

Es END	TRUSS DESIGNATION	BEARING ANGLES				WE	BEARING STRUT				VERTICAL "ST" STRUT ⚠2				END STIFFENER MK. V1			MK. V3	
		MK	TYPE STEEL	CHORD SIZE	LENGTH ⚠4		MK	TYPE STEEL	DIA	LENGTH	MK	TYPE STEEL	DIA	LENGTH	TYPE STEEL	DIA	LENGTH	[illegible]	LENGTH
	C32T33-59075	9	A242	2"x1 1/2"x.37"	1'-10"	6'-1 1/4"	1	A242	1.14	6'-5"	2	A242	1.14	2'-4 7/8"	A242	1.14	0'-4 3/[illegible]	A24[illegible]	[illegible]'-9 1/2"

⚠2

CHECK DIMENSION FOR TRUSS FAB

LOCATION OF TRANS. TRUSS				
℄ T-1	℄ T-2	℄ T-3	℄ T-4	Fs
9'-6 1/2"	22'-10 1/2"	36'-2 1/2"	49'-6 1/2"	5'-2 1/2"

CORE END

EL END	TRUSS DESIGNATION	BEARING ANGLE				WEv	DOUBLE STRUT				DOUBLE STRUT				END STIFFENER ⚠5 MK. V1			WEB "WCv"					WEB "WTv" ⚠2				
		MK	TYPE STEEL	CHORD SIZE	LENGTH		MK	TYPE STEEL	DIA	LENGTH	MK	TYPE STEEL	DIA	LENGTH	TYPE STEEL	DIA	LENGTH (3 REQ'D)	MK	TYPE STEEL	PC	DIA	LENGTH	MK	TYPE STEEL	[illegible]	DIA	LENGTH
	C32T33-59075	9V	A242	2"x1 1/2"x.37"	0'-10"		-	-	-	-	—	—	—	—	A36	1.09	4 3/8"	—	—	—	-	—	8	A36	1	1.09	2'-6 1/4"

⚠2

STEEL TRUSS DETAILS
FOR
WORLD TRADE CENTER - N.Y.C.
FOR
THE PORT OF NEW YORK AUTHORITY

FLOOR TRUSS C32T33 59'-0 3/4" OVERALL
WORLD TRADE CENTER TOWERS A-B

FABRICATION BY LACLEDE STEEL COMPANY

FABRICATED AT MADISON, ILLINOIS		DESIGN DRAWING NO 7-ABI-30	PLATE
APP. FOR FABRICATION FOR P.O.N.Y.A. James White	DATE 3/12/69	DRAWN BY [illegible] DATE JAN. 23, 1969	
APPROVED FOR FABRICATION BY FOR FABRICATOR	DATE	CHECKED BY T.M.CHURA DATE JAN. 23, 1969	IN CHARGE OF PROD. DIV.
DETAILED BY A. CARL WEBER		FABRICATION CONT. NO. WTC 221	SHEET NO. ST 233

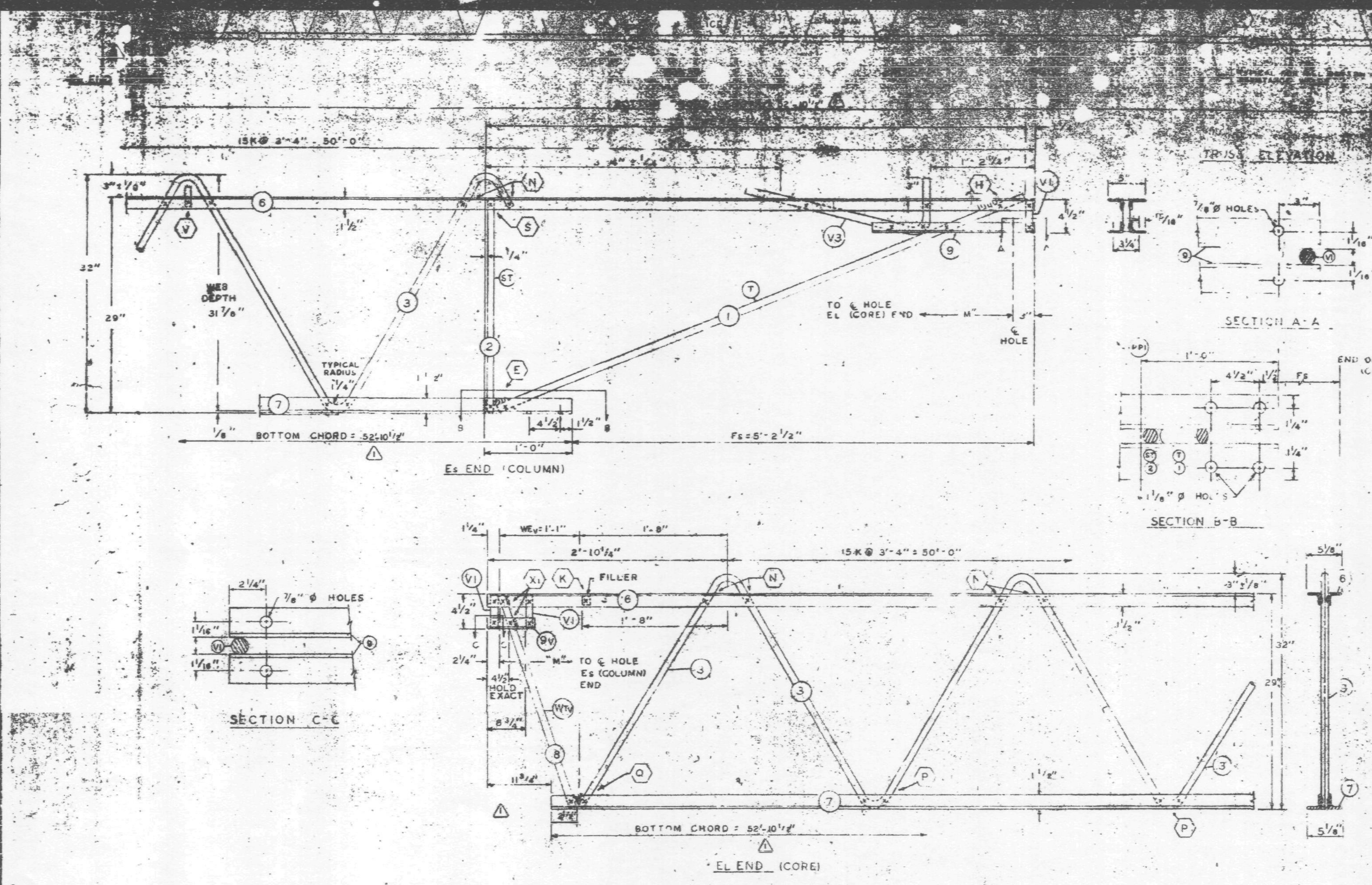

ALL PANEL POINTS RESISTANCE WELDED (x)
ARC WELDS INDICATED AT SHADED AREAS
AND AT BOTTOM CHORD WEB SPLICES
ALL WELD DETAILS SHOWN ON SHEETS ST290, ST291, ST292, ST29

SEE SHEET ST2 FOR VI- & V3 DETAILS
LETTERS IN HEXAGON INDICATE WELD DETAILS, i.e. (A)
LETTERS AND NUMBERS IN SQUARES INDICATE RESISTANCE WELD STRENGTH IDENTIFIED IN THE QUALITY CONTROL PROGRAM, i.e., R21

DAMPING UNIT CONNECTION PLATE ATTACHED TO BOTTOM CHORD (COL END) IN FIELD ASSEMBLY BY CONTRACT W.T.C. 223.00.

NO.	DATE	REVISION
3	2-21-69	AS NOTED
2	2-18-69	AS NOTED
1	1-31-69	AS NOTED

REF. DRWG.

7-A81-30	1-9-69
7-A81-32	[illegible]
7-A81-34	[illegible]
7-A81-36	[illegible]
7-A81-33	[illegible]
7-A81-[illegible]	[illegible]

PAINT
LACLEDE ELECTROCOAT
RED NO. 10001

TRUSS DESIGNATION	TOP CHORD TWO ANGLES				BOTTOM CHORD TWO ANGLES				MAIN WEB "W"					FILLER		CONNECTION FILLER			CHORD PLATE				"M" ⅞ HOLES
	MK	TYPE STEEL	CHORD SIZE	LENGTH	MK	TYPE STEEL	CHORD SIZE	LENGTH (1)	MK	TYPE STEEL	DIA	LENGTH	NO. OF K	NO.	DIA	NO	DIA	LENGTH	MK	TYPE STEEL	SIZE	LENGTH	
C32T33-59075	6	A242	2"x1½"x.25"	59'-0¾"	7	[illegible]	2"x1½"x.25"	52'-10½"	3	A36	1.09	97'-0"	15½ K@ 3'-4" = 51'-8"	11	1.09	4	1.09	0'-3"	—	—	—	—	58'-7½"

COLUMN END

Es END	TRUSS DESIGNATION	BEARING ANGLE				WE	DIAGONAL STRUT				VERTICAL "ST" STRUT (2)				END V1			V3		
		MK	TYPE STEEL	CHORD SIZE	LENGTH (3)		MK	TYPE STEEL	DIA	LENGTH	MK	TYPE STEEL	DIA	LENGTH	TYPE STEEL	DIA	LENGTH	STEEL		LENGTH
	C32T33-59075	9	A242	2"x1½"x.37"	2'-3"	6-1¼'	1	A242	1.14	6'-5"	2	A242	1.14	2'-4⅞"	A242	1.14	0'-4¾"	A242	1.14	[illegible]-9½"

CORE END

EL END	TRUSS DESIGNATION	BEARING ANGLE				WEv	DOUBLE STRUT				DOUBLE STRUT				END STIFFENER (2) MK. V1			WEB "VCv"					WEB "WTv" (2)				
		MK	TYPE STEEL	CHORD SIZE	LENGTH		MK	TYPE STEEL	DIA	LENGTH	MK	TYPE STEEL	DIA	LENGTH	TYPE STEEL	DIA	LENGTH (2 REQ'D)	MK	TYPE STEEL	PCS	DIA	LENGTH	MK	TYPE STEEL	PCS	DIA	LENGTH
	C32T33-59075	9V	A242	2"x1½"x.37"	0'-10"				—		—	—	—	—	A36	1.09	4⅜"	—	—	—	—	—	8	A36	1	1.09	2'-8¼"

CHECK DIMENSION FOR TRUSS FAB

LOCATION OF TRANS TRUSS				
CL-1	CL-2	CL-3	CL-4	Fs
9'-8½"	22'-10½"	36'-2½"	49'-6½"	5'-2½"

STEEL TRUSS DETAILS
FOR
WORLD TRADE CENTER - N.Y.C.
FOR
THE PORT OF NEW YORK AUTHORITY

FLOOR TRUSS C32T33 59'-0¾" OVERALL
WORLD TRADE CENTER TOWERS A-B

FABRICATION BY LACLEDE STEEL COMPANY
FABRICATED AT MADISON, ILLINOIS
DESIGN DRAWING NO. 7-A81-30
PLATE
APPROVED FOR FABRICATION FOR PONYA: James White — DATE 3/4/69
DRAWN BY: [illegible] DATE JAN. 23, 1969
APPROVED FOR FABRICATION BY: FOR FABRICATOR — DATE
CHECKED BY: T. MOHURA DATE JAN. 23, 1969
IN CHARGE OF PROD. DEV.
LACLEDE STEEL CO.
DETAILED BY CARL WEBER
FABRICATION CONT. NO. W.T.C. 221
SHEET NO. [illegible]

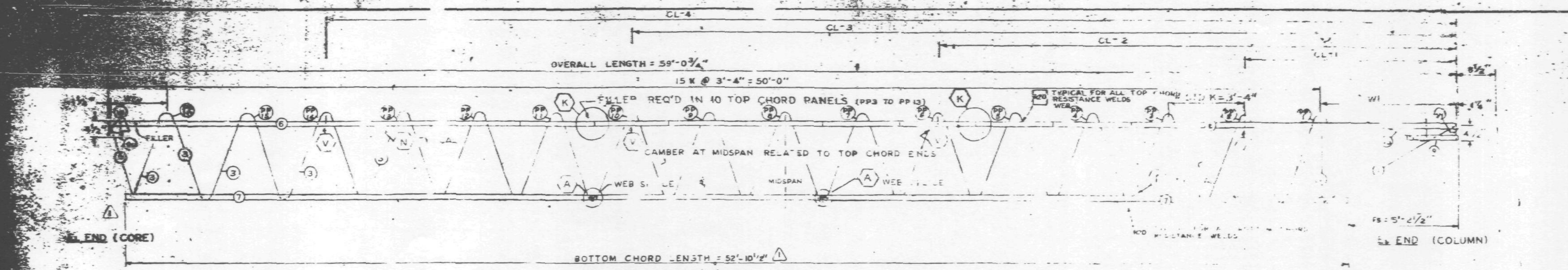

FABRICATION REQUIREMENTS	[illegible]	[illegible]
CAMBER AT MIDSPAN	1 3/4"	[illegible]
DESIGN DEPTH	[illegible]	[illegible]
PANEL "K"	[illegible]	[illegible]
OVERALL LENGTH	59'-0 3/4"	± 3/8"
WEB DEPTH	31 7/8"	± 1/4"

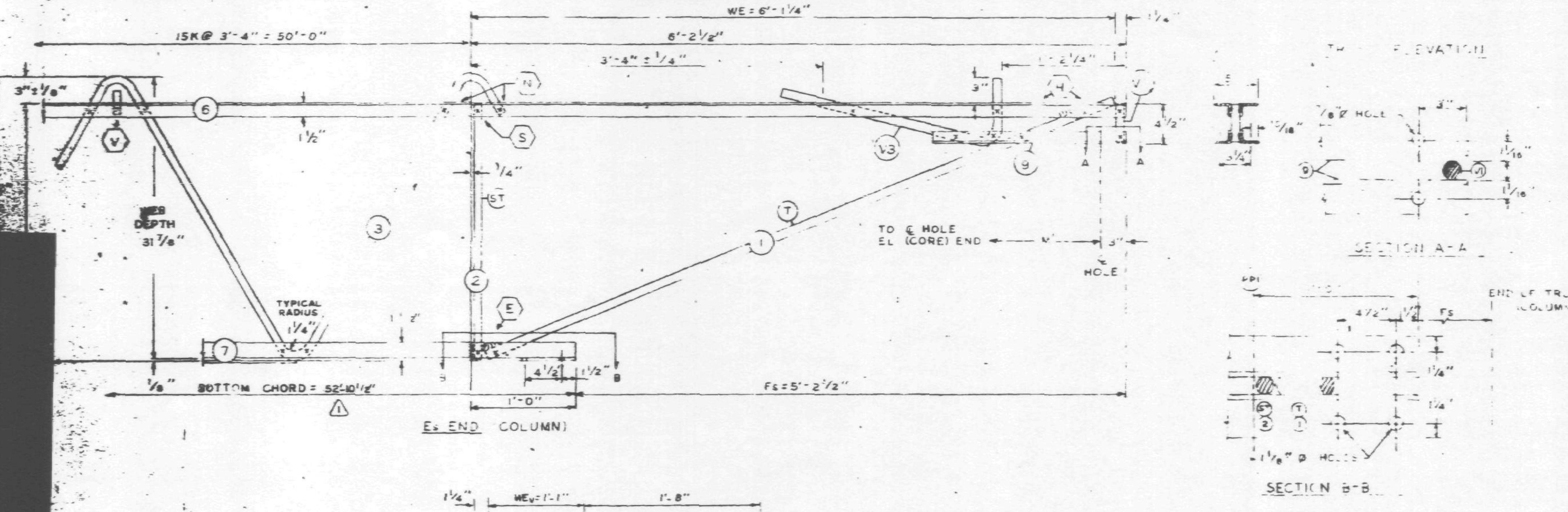

ALL PANEL POINTS RESISTANCE WELDED (X)
ARC WELD INDICATED AT SHADED AREAS
AND AT BOTTOM CHORD WEB SPLICES
ALL WELD DETAILS SHOWN ON SHEETS ST290, ST291, ST292, ST293.

SEE SHEET ST295 FOR V1 & V3 DETAILS
LETTERS IN HEXAGON INDICATE WELD DETAILS, ie. (A)
LETTERS AND NUMBERS IN SQUARES INDICATE RESISTANCE WELD STRENGTH IDENTIFIED IN THE QUALITY CONTROL PROGRAM, ie. R21

DAMPING UNIT CONNECTION PLATE ATTACHED TO BOTTOM CHORD ... END IN FIELD ASSEMBLY BY CONTRACT W.T.C. 223.00.

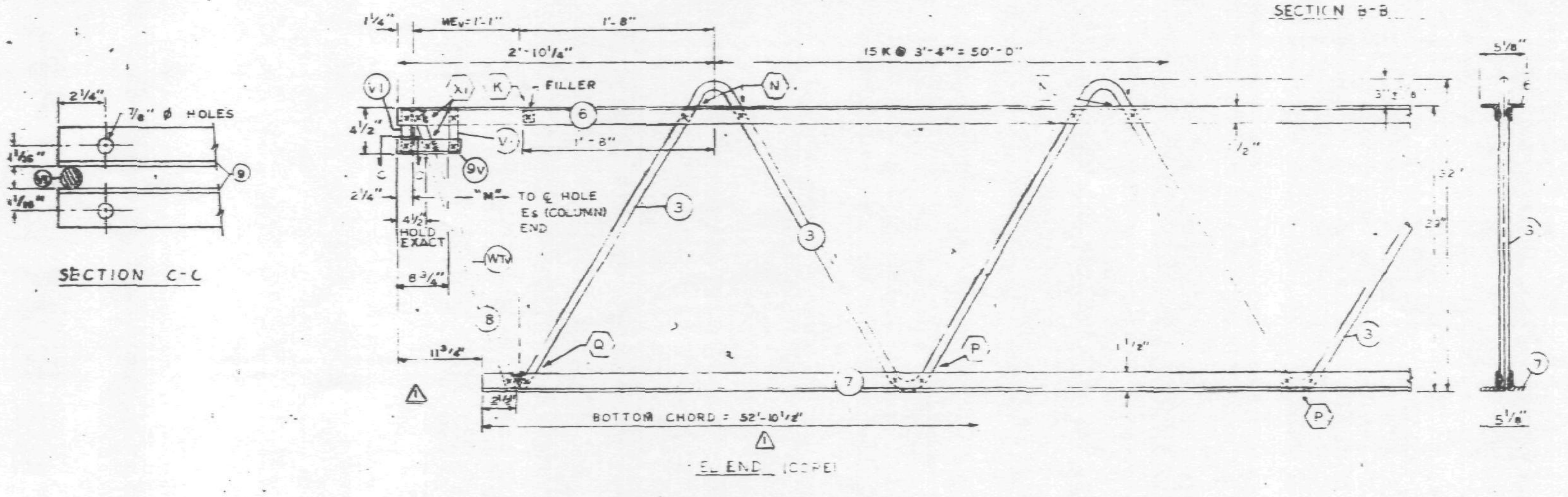

NO.	DATE	REVISION
2	2-18-69	AS NOTED
1	1-31-69	AS NOTED

REF. DRWG.

7-ABI-30	1-8-69
7-ABI-52	[illegible]
7-ABI-14	[illegible]
7-ABI-34	[illegible]
7-ABI-53	7-30-[illegible]
7-ABI-[illegible]	[illegible]

PAINT
LACLEDE ELECTROCOAT
RED NO. 10001

TRUSS DESIGNATION	TOP CHORD TWO ANGLES				BOTTOM CHORD TWO ANGLES				MAIN WEB "A"					FILLER		CONNECTION FILLER			... PLATE				"M" % HOLES
	MK.	TYPE STEEL	CHORD SIZE	LENGTH	MK.	TYPE STEEL	CHORD SIZE	LENGTH	MK.	TYPE STEEL	DIA.	LENGTH	NO. OF ...	NO.	DIA.	NO.	DIA.	LENGTH	MK.	TYPE STEEL	SIZE	LENGTH	
C32T33 - 58075	6	A242	2"x1 1/2"x.25"	59'-0 3/4"	7	[illegible]	2"x1 1/2"x.25"	52'-10 1/2"	3	A36	1.09	97'-0"	15 1/2 n @ 3'-4" = 51'-8"	11	1.09	4	1.09	0'-3"	—	—	—	—	58'-7 1/2"

TRUSS DESIGNATION	BEARING ANGLES				WE	DIAGONAL "..." STRUT				VERTICAL "ST" STRUT 2				END STIFFENER MK. V1			END STIFFENER MK. V3		
	MK.	TYPE STEEL	CHORD SIZE	LENGTH		MK.	TYPE STEEL	DIA.	LENGTH	MK.	TYPE STEEL	DIA.	LENGTH	TYPE STEEL	DIA.	LENGTH	TYPE STEEL	DIA.	LENGTH
C32T33 - 58075	9	A242	2"x1 1/2"x.37"	1'-10"	6'-1 1/4"	1	A242	1.14	6'-5"	2	A242	1.14	2'-4 7/8"	A242	1.14	0'-4 3/8"	A2..		2'-9 1/2"

TRUSS DESIGNATION	BEARING ANGLE				WEv	DOUBLE STRUT				DOUBLE STRUT				END STIFFENER 2 MK. V1			WEB "WCv"					WEB "WTv" 2				
	MK.	TYPE STEEL	CHORD SIZE	LENGTH		MK.	TYPE STEEL	DIA.	LENGTH	MK.	TYPE STEEL	DIA.	LENGTH	TYPE STEEL	DIA.	LENGTH (2 REQ'D)	MK.	TYPE STEEL	PCS	DIA.	LENGTH	MK.	TYPE STEEL	PCS	DIA.	LENGTH
C32T33 - 58075	9V	A242	2"x1 1/2"x.37"	0'-10"		-	-	-	-	—	—	—	—	A36	1.09	4 3/8"	—	—	—	—	—	8	A36	1	1.09	2'-6 1/4"

CHECK DIMENSION FOR TRUSS FAB

LOCATION OF TRANS TRUSS				
CL-1	CL-2	CL-3	CL-4	Fs
9'-6 1/2"	22'-10 1/2"	36'-2 1/2"	49'-6 1/2"	5'-2 1/2"

STEEL TRUSS DETAILS
FOR
WORLD TRADE CENTER - N.Y.C.
FOR
THE PORT OF NEW YORK AUTHORITY

FLOOR TRUSS C32T33 59'-0 3/4" OVERALL
WORLD TRADE CENTER TOWERS A-B

FABRICATION BY LACLEDE STEEL COMPANY
FABRICATED AT MADISON, ILLINOIS
DESIGN DRAWING NO. 7-ABI-30
PLATE
APPROVED FOR FABRICATION BY: James ... FOR P.O.N.Y.A. DATE 2/24/69
DRAWN BY: ... DATE JAN. 23, 1969
APPROVED FOR FABRICATION BY: FOR FABRICATOR DATE
CHECKED BY: ... DATE JAN. 23, 1969
IN CHARGE OF ...
DETAILED BY A. CARL WEBER
FABRICATION CONT. NO. W.T.C. 221
SHEET NO. ST 233

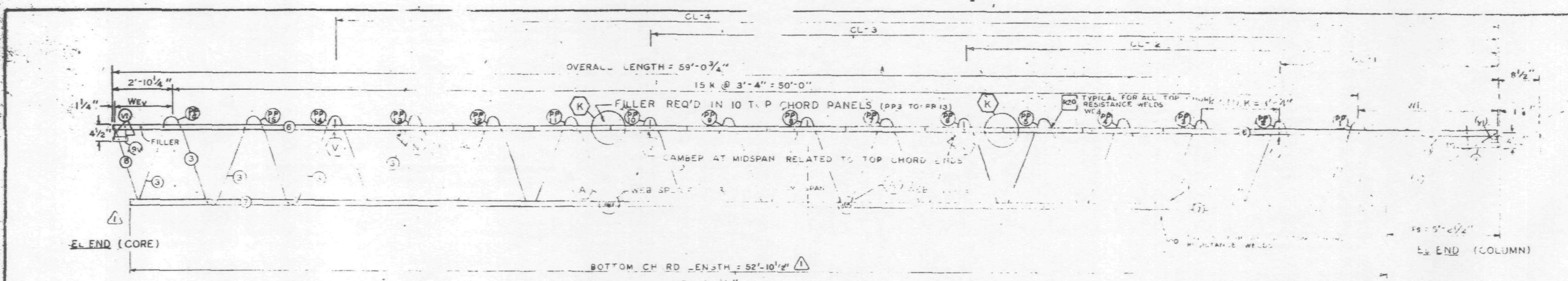

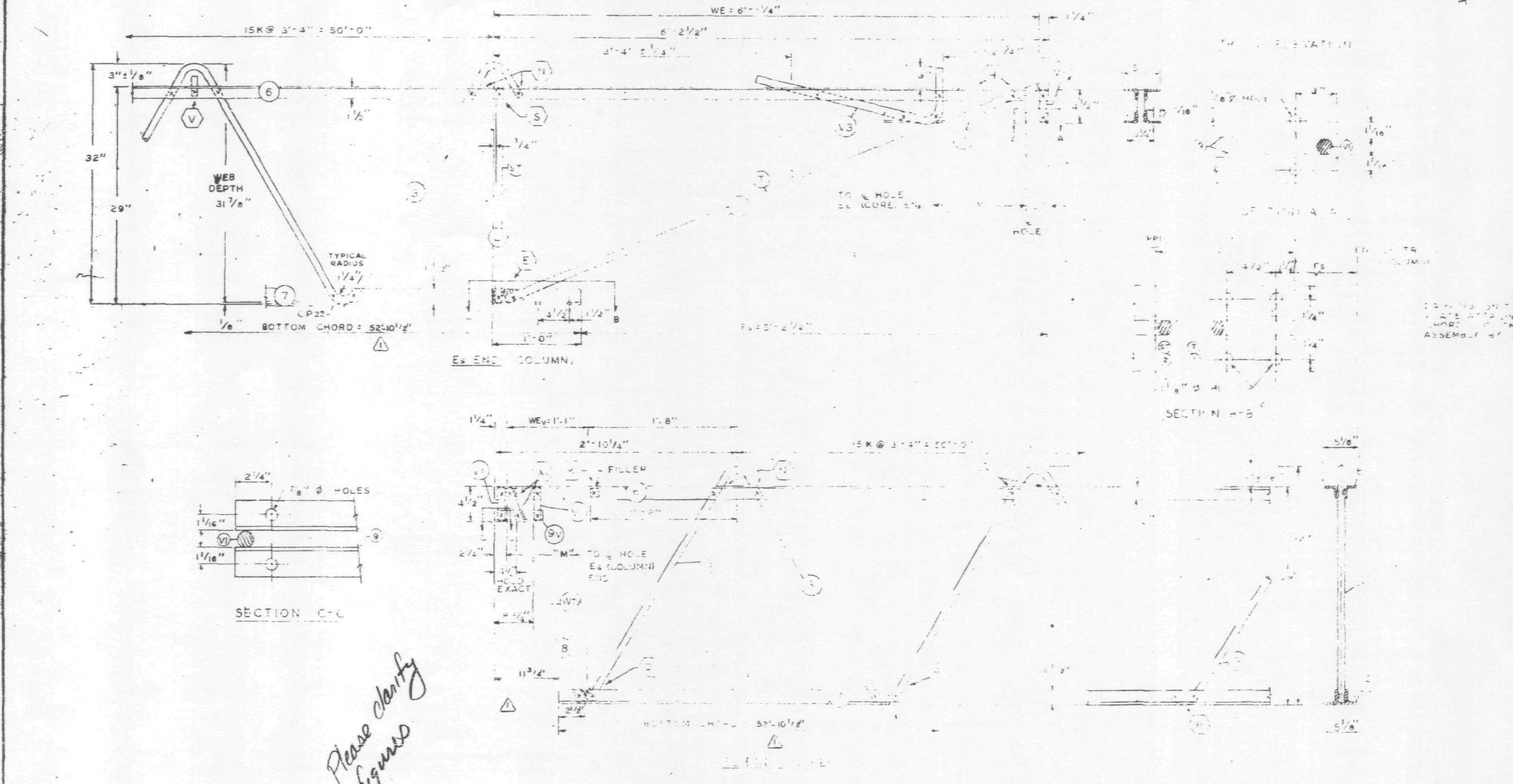

ALL PANEL POINTS RESISTANCE WELDED (X) ARE WELD INDICATED AT SHADED AREA AND AT BOTTOM CHORD WEB SPLICES. ALL WELD DETAILS SHOWN ON SHEETS ST290, ST291, ST292, ST293.

SEE SHEET ST29[illegible] FOR V1 & V3 DETAILS
LETTERS IN HEXAGON INDICATE WELD DETAILS, ie, (A)
LETTERS AND NUMBERS IN SQUARES INDICATE RESISTANCE WELD STRENGTH IDENTIFIED IN THE QUALITY CONTROL PROGRAM, ie, [R21]

ASSEMBLY AT CONTRACT W.T.C. 223.00.

FABRICATION REQUIREMENTS	DESIGN	TOLERANCE
CAMBER AT MIDSPAN	1 3/4"	± 1/8"
DESIGN DEPTH	29"	± 1/4"
PANEL "K"	3'	± 1/4"
OVERALL LENGTH	[illegible] 3/4"	± 3/8"
W.P. DEPTH	[illegible]/8"	± [illegible]

NO.	DATE	REVISION	BY
1	1-31-69	AS NOTED	G.D.C.

REF DRWG.

7-AB1-30	1-9-69
7-AB1-52	[illegible]-5-68
7-AB4-14	[illegible]-3-68
7-AB 54	1-25-68
7-AB1-53	[illegible] 24-68
7-AB3 [illegible]	[illegible]

PAINT
LACLEDE ELECTROCOAT
RED NO 10001

TRUSS DESIGNATION	MK	TYPE STEEL	SIZE	LENGTH	TYPE STEEL	SIZE	LENGTH	TYPE STEEL	DIA	LENGTH			DIA	MK	DIA	LENGTH	MK	TYPE STEEL	DIA	LENGTH	HOLES
C32T33-59075	6	A242	2"x1 1/2"x.25"	59'-[illegible] 3/4"	[illegible]	2"x1 1/2"x.25"	52'-10 1/2"	A36	1.09	9'-10"	15 1/2"	5'-4" = 51'-6"	1.09	4	1.09	[illegible]'-3"	–	–	–	–	[illegible]8'-7 1/2"

CHECK DIMENSION FOR TRUSS FAB

LOCATION OF TRANS TRUSS				
CL-1	CL-2	CL-3	CL-4	Fs
9'-8 1/2"	22'-10 1/2"	36'-2 1/2"	49'-6 1/2"	5'-2 1/2"

COLUMN END

Es END TRUSS DESIGNATION	MK	TYPE STEEL	SIZE	LENGTH		MK	TYPE STEEL	DIA	LENGTH	MK	TYPE STEEL	DIA	LENGTH	TYPE STEEL	DIA	LENGTH	MK	DIA	LENGTH
C32T33-59075	9	A242	2"x1 1/2"x.25	[illegible]'-10"	[illegible]-1/4"	[illegible]	A242	1.14	[illegible]	2	A36	1.09	[illegible]'-4 7/8"	A242	1.14	[illegible]'-4[illegible]"	12	1.14	2'-9 1/2"

CORE END

EL END TRUSS DESIGNATION	BEARING ANGLE MK	TYPE STEEL	SIZE	LENGTH	WEV	DOUBLE STRUT MK	TYPE STEEL	DIA	LENGTH	DOUBLE STRUT MK	TYPE STEEL	DIA	LENGTH	END STIFFENER TYPE STEEL	DIA	LENGTH	"WCV" MK	TYPE STEEL	POS	DIA	LENGTH	WEB "WTV" MK	TYPE STEEL		DIA	LENGTH
C32T33-59075	97	A242	2"x1 1/2"x.25	0'-10"			–			–	–		—	A242	1.14	4 3/8"	–	—	—	—	—	8	A242	1	1.14	2'-8 1/4"

Please clarify figures

X
2/19/69 SK

STEEL TRUSS DETAILS
FOR
WORLD TRADE CENTER – N.Y.C.
FOR
THE PORT OF NEW YORK AUTHORITY

FLOOR TRUSS C32T33 59'-0 3/4" OVERAL
WORLD TRADE CENTER TOWERS A-B

FABRICATION BY LACLEDE STEEL COMPANY		
FABRICATED AT MADISON, ILLINOIS	DESIGN DRAWING NO. 7-AB1-30	PLATE
APPROVED FOR FABRICATION BY FOR P.O.N.Y.A. DATE	DRAWN BY: [illegible] DATE JAN. 23, 1969	
APPROVED FOR FABRICATION BY FOR FABRICATOR DATE	CHECKED BY: T.M.CHURA DATE JAN. 23, 1969	IN CHARGE OF PROD. DEV.
DETAILED BY A CARL WEBER	FABRICATION CONT. NO. W.T.C. 221	SHEET NO ST 233

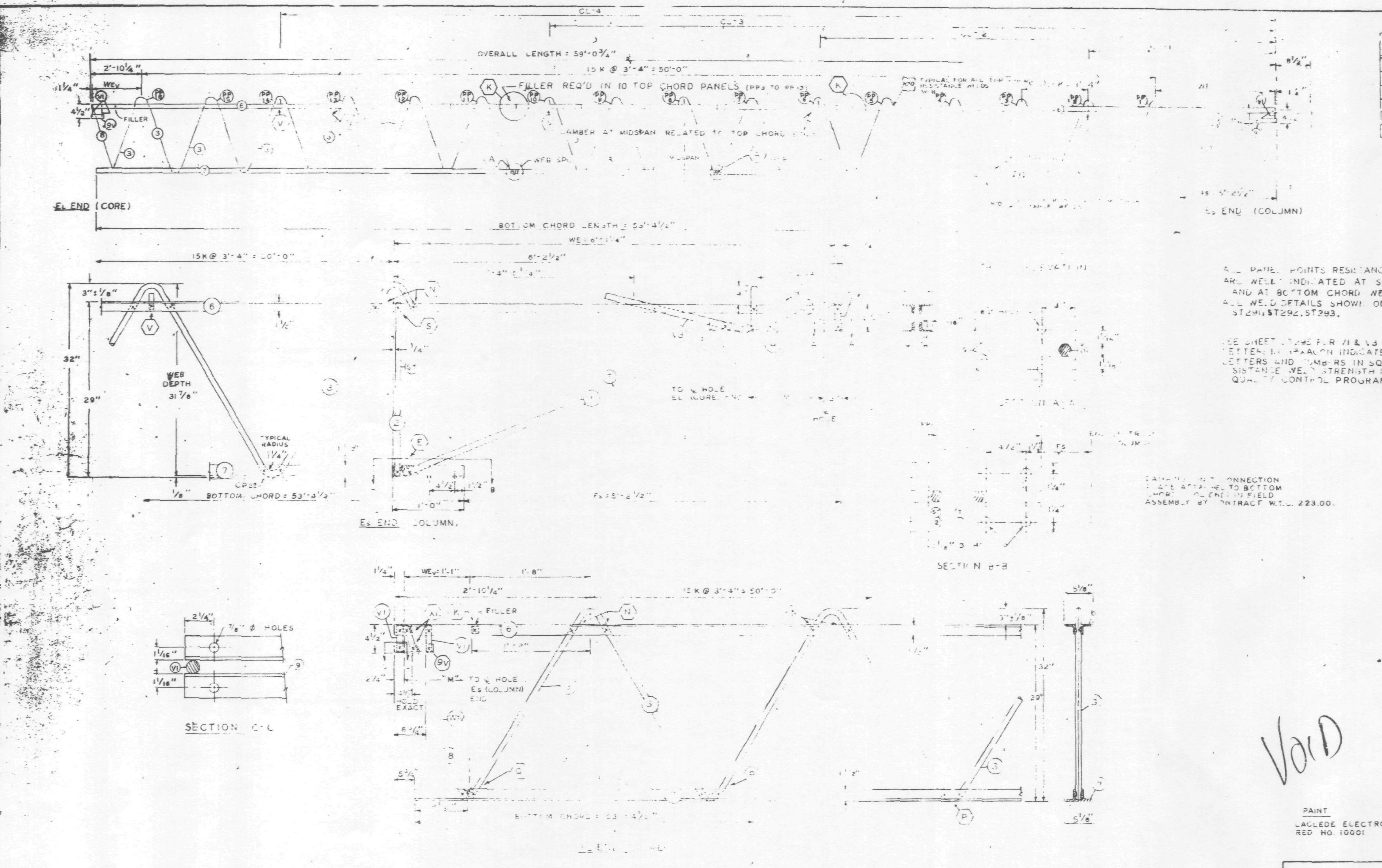

ALL PANEL POINTS RESISTANCE WELDED ... ARC WELD INDICATED AT SHADED AREAS AND AT BOTTOM CHORD WEB SPLICES. ALL WELD DETAILS SHOWN ON SHEETS ST290, ST291, ST292, ST293.

SEE SHEET ST298 FOR V1 & V3 DETAILS. LETTERS IN HEXAGON INDICATE WELD DETAILS, i.e. (A). LETTERS AND NUMBERS IN SQUARES INDICATE RESISTANCE WELD STRENGTH IDENTIFIED IN THE QUALITY CONTROL PROGRAM, i.e. [K21]

DAMPING UNIT CONNECTION PLATE ATTACHED TO BOTTOM CHORD ... IN FIELD ASSEMBLY BY CONTRACT W.T.C. 223.00.

FABRICATION REQUIREMENTS	DESIGN	TOLERANCE
CAMBER AT MIDSPAN	1 3/4"	± 1/8"
DESIGN DEPTH	2[illegible]	± 1/4"
PANEL "K"	[illegible]4"	± 1/4"
OVERALL LENGTH	[illegible]-0 3/4"	± 3/8"
WEB DEPTH	31 7/8"	± [illegible]4

NO.	DATE	REVISION	BY

VOID

REF. DRWG.

7-ABI-30	1-9-69
7-ABI-52	[illegible]
7-ABI-14	[illegible]
7-ABI-54	[illegible]
7-ABI-53	7-[illegible]-68
7-AB3-70	11-25-68

PAINT
LACLEDE ELECTROCOAT
RED NO. 10001

TRUSS DESIGNATION	MK	TYPE STEEL	[illegible]										
C32T33-59075	6	A242	2"x1 1/2"x[illegible]	[illegible]	[illegible]	53'-4 1/2"	A36	1.09	[illegible]	1.09	[illegible]	1.09	[illegible]

COLUMN END

Es END	TRUSS DESIGNATION	MK	TYPE STEEL	[illegible]											
	C32T33-59075	9	A242	2"x1 1/2"	[illegible]	[illegible]	1.14	[illegible]	A36	1.09	[illegible]	1.14	[illegible]	1.14	[illegible]

CHECK DIMENSION FOR TRUSS FAB				
LOCATION OF TRANS TRUSS				
CL-1	CL-2	CL-3	CL-4	Fs
9'-8 1/2"	22'-10 1/2"	36'-2 1/2"	49'-6 1/2"	5'-2 1/2"

CORE END

EL END	TRUSS DESIGNATION	BEARING ANGLE				WEV	DOUBLE STRUT	DOUBLE STRUT	END STIFFENER			WEB "WCV"	WEB "WTV"				
		MK	TYPE STEEL	SIZE	LENGTH				TYPE STEEL		LENGTH		MK	TYPE STEEL			LENGTH
	C32T33-59075	9V	A242	2"x1 1/2"x.25	0'-10"		—	—	A242	1.14	4 3/8"	—	8	A242		1.14	2'-6 1/4"

STEEL TRUSS DETAILS
FOR
WORLD TRADE CENTER - N.Y.C.
FOR
THE PORT OF NEW YORK AUTHORITY

FLOOR TRUSS C32T33 59'-0 3/4" OVERALL
WORLD TRADE CENTER TOWERS A-B

FABRICATION BY LACLEDE STEEL COMPANY			
FABRICATED AT MADISON, ILLINOIS		DESIGN DRAWING NO. 7-ABI-30	PLATE
APPROVED FOR FABRICATION BY FOR P.O.N.Y.A.	DATE	DRAWN BY: dee DATE JAN. 23, 1969	
APPROVED FOR FABRICATION BY FOR FABRICATOR	DATE	CHECKED BY: T.M.CHUPA DATE JAN. 23, 1969	IN CHARGE OF PROD. DEV.
DETAILED BY: A CARL WEBER		FABRICATION CONT. NO. W.T.C. 221	SHEET NO. ST 233

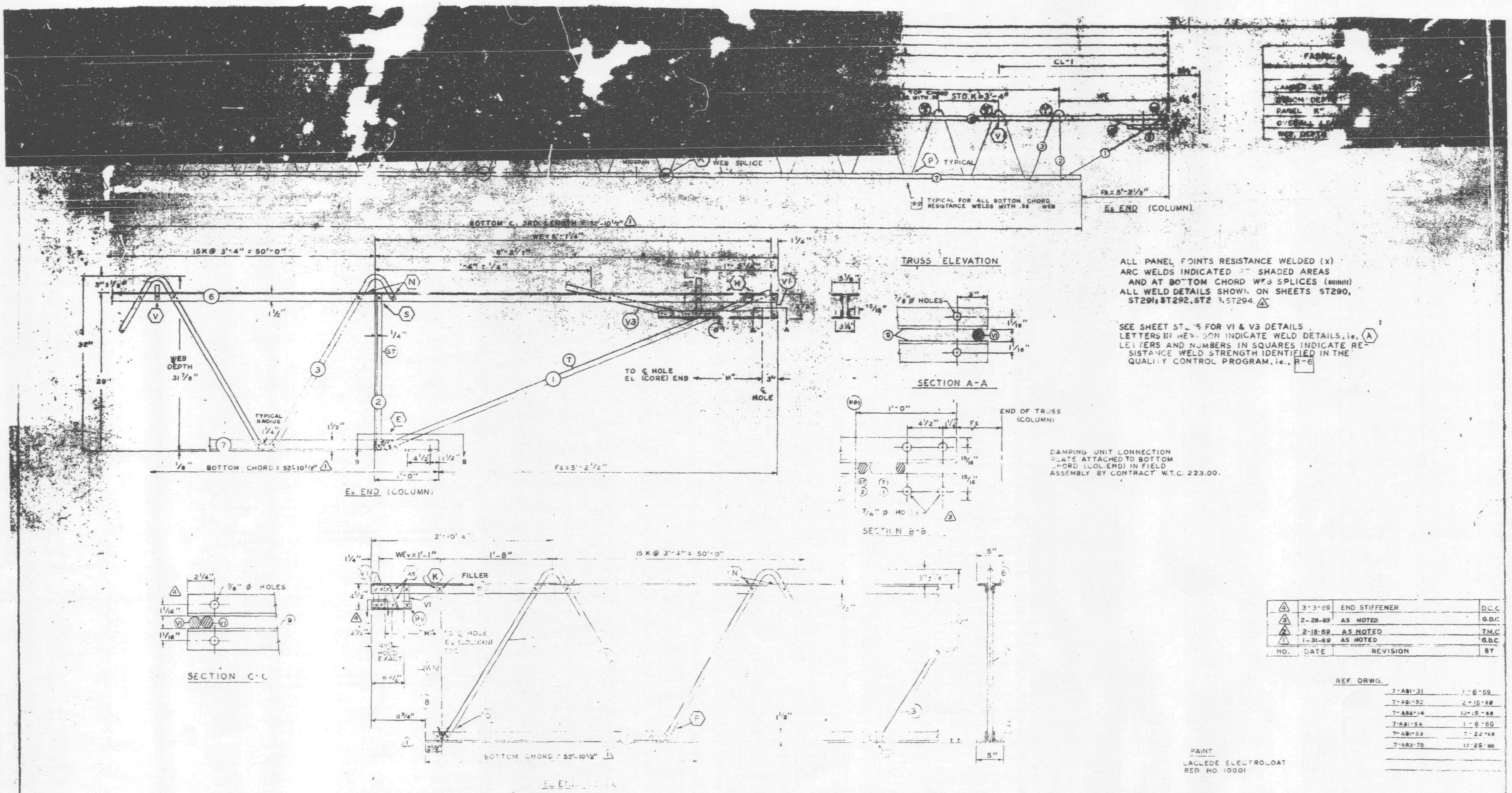

NO.	DATE	REVISION	BY
4	3-3-69	END STIFFENER	D.C.C
3	2-28-69	AS NOTED	G.D.C
2	2-18-69	AS NOTED	T.M.C
1	1-31-69	AS NOTED	G.D.C

REF. DRWG.

7-ABI-31	1-6-69
7-ABI-52	2-15-68
7-ABI-14	10-15-68
7-ABI-54	1-6-69
7-ABI-53	7-22-68
7-AB3-70	11-25-68

PAINT
LACLEDE ELECTROCOAT
RED NO 10001

STEEL TRUSS DETAILS
FOR
WORLD TRADE CENTER - N.Y.C
FOR
THE PORT OF NEW YORK AUTHORITY

FLOOR TRUSS C32T34 59'-0 3/4" OVERALL
WORLD TRADE CENTER TOWERS A-B

FABRICATION BY LACLEDE STEEL COMPANY

FABRICATED AT MADISON, ILLINOIS	DESIGN DRAWING NO. 7-ABI-46	PLATE
James White 3/10/69	DRAWN BY [illegible] DATE JAN 23, 1969	
FOR FABRICATOR LACLEDE STEEL CO	CHECKED BY T.M. CHURA DATE JAN 23, 1969	IN CHARGE OF PROD. DEV.
	FABRICATION CONT NO. 221	SHEET NO. ST 234

TRUSS DESIGNATION	MK	TYPE STEEL	CHORD SIZE	LENGTH	MK	TYPE STEEL	SIZE	LENGTH (1)	MK	TYPE STEEL	DIA	LENGTH		(2)	DIA		DIA	LENGTH	MK			
C32T34-59075	6	A242	2"x1 1/2"x.25	[illegible]		A242	2"x1 1/2"x.25	52'-10 1/2"	3	A242	.98	97'-0"	15 1/2"K @ 3'-4" = 51'-8"	11	.96	4	.98	3"		-		-

COLUMN END

Es END TRUSS DESIGNATION	MK	TYPE STEEL	CHORD SIZE	LENGTH		MK	TYPE STEEL	DIA	LENGTH	MK	TYPE STEEL	DIA (2)	LENGTH	TYPE STEEL	DIA	LENGTH			LENGTH
C32T34-59075	9	A242	2"x1 1/2"x.37" (2)	[illegible]	6'-1 1/4"		[illegible]	[illegible]	[illegible]	2	A242	1.14	[illegible]	A242	1.14	[illegible]	A242		[illegible]

3'-6 7/8", 22'-0 1/2", 36'-2 1/2", 44'-0 1/2", 51'-2 1/2"

CORE END

EL END TRUSS DESIGNATION	BEARING ANGLE MK	TYPE STEEL	CHORD SIZE	LENGTH	WEv	DOUBLE STRUT MK	TYPE STEEL		LENGTH (3 REQ'D)	DOUBLE STRUT MK	TYPE STEEL	DIA	LENGTH	END STIFFENER (4) MK. VI TYPE STEEL	DIA	LENGTH (3 REQ'D)	WEB "V1v" MK			LENGTH	WEB "N1v" MK	TYPE STEEL		DIA	LENGTH
C32T34-59075	9v	A242	2"x1 1/2"x.37" (2)	10"	1'-1"					-	-	-	-	A242	.98 (2)	4 3/8"	-	-	-	-	8	A242	1	.98	2'-1 1/4" (2)

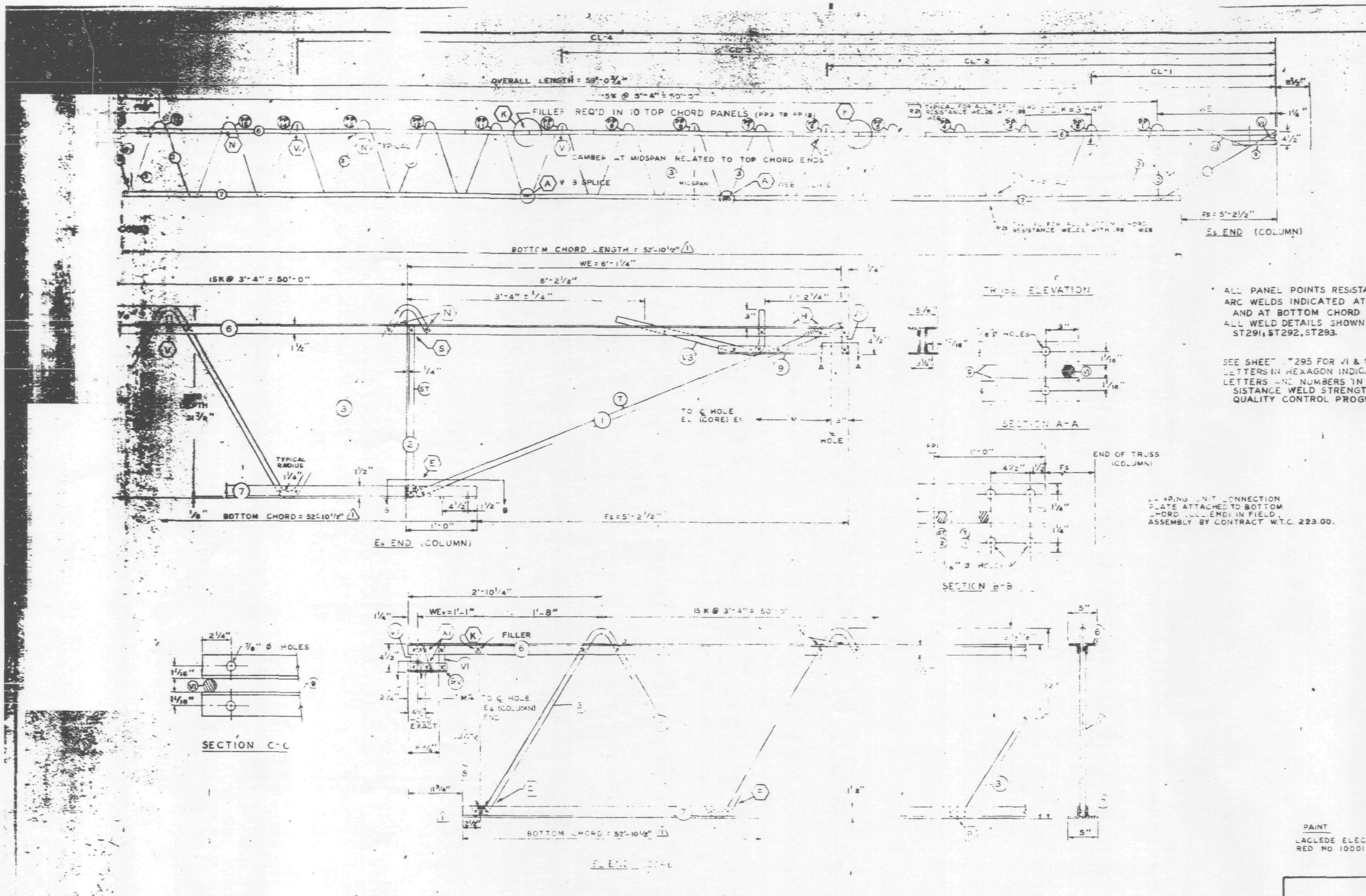

- ALL PANEL POINTS RESISTANCE WELDED (x)
- ARC WELDS INDICATED AT SHADED AREAS AND AT BOTTOM CHORD WEB SPLICES
- ALL WELD DETAILS SHOWN ON SHEETS ST290, ST291, ST292, ST293.

SEE SHEET ST295 FOR VI & V3 DETAILS.
LETTERS IN HEXAGON INDICATE WELD DETAILS, ie. (A)
LETTERS AND NUMBERS IN SQUARES INDICATE RESISTANCE WELD STRENGTH IDENTIFIED IN THE QUALITY CONTROL PROGRAM, ie., R-6

FABRICATION REQUIREMENTS		
CAMBER AT MIDSPAN	1"	± [illegible]
DESIGN DEPTH	29"	± 1/4"
PANEL K"	3'-4"	± [illegible]
OVERALL LENGTH	59'-0 3/4"	± 3/8"
WEB DEPTH	31 7/8"	± 1/4

NO.	DATE	REVISION	BY
2	2-18-69	AS NOTED	T.M.C.
1	1-31-69	AS NOTED	G.B.C.

REF. DRWG.

7-AB1-31	1-6-69
7-AB1-52	2-15-68
7-AB4-14	10-15-68
7-AB1-54	1-6-69
7-AB1-53	7-22-68
7-AB3-70	11-25-68

PAINT
LACLEDE ELECTROCOAT
RED NO 10001

TRUSS DESIGNATION	TOP CHORD TWO ANGLES				BOTTOM CHORD TWO ANGLES				MAIN WEB "A"										
	MK	TYPE STEEL	CHORD SIZE	LENGTH	MK	TYPE STEEL	CHORD SIZE	LENGTH	MK	TYPE STEEL	DIA	LENGTH	[illegible]	2	[illegible]	[illegible]	DIA	LENGTH	[illegible]
C32T34-S8075	6	A242	2"x1 1/2"x.25	59'-0 3/4"	[illegible]	A242	2"x1 1/2"x.25	52'-10 1/2"	3	A242	.98	97'-0"	15 1/2"K@3'-4"=51'-8"	11	.98	4	.98	3"	—

TRUSS DESIGNATION	BEARING ANGLES				[illegible]	[illegible]				"ST" STRUT				[illegible]					
	MK	TYPE STEEL	CHORD SIZE	LENGTH		MK	TYPE STEEL	DIA	LENGTH	MK	TYPE STEEL	DIA	LENGTH	TYPE STEEL	DIA	LENGTH	TYPE STEEL	DIA	[illegible]
C32T34-S8075	9	A242	2"x1 1/2"x.37	1'-10"	6'-1 1/4"	[illegible]	A242	.14	6'-5"	[illegible]	A242	.114	2'-4 7/8"	A242	.14	0'-4 3/8"	A242	.14	2'-9 1/2"

TRUSS DESIGNATION	BEARING ANGLE				WEv	DOUBLE STRUT				DOUBLE STRUT				END STIFFENER MK. VI			WEB "WCV"					WEB "WTV"				
	MK	TYPE STEEL	CHORD SIZE	LENGTH		MK	TYPE STEEL	DIA	LENGTH (3 REQ'D)	MK	TYPE STEEL	DIA	LENGTH	TYPE STEEL	DIA	LENGTH (2 REQ'D)	MK	TYPE STEEL	[illegible]	[illegible]	LENGTH	MK	TYPE STEEL	[illegible]	[illegible]	LENGTH
C32T34-S8075	9V	A242	2"x1 1/2"x.37	10"	1'-1"	—	—	—	—	—	—	—	—	A242	.98	4 3/8"	—	—	—	—	—	8	A242	1	.98	2'-6 1/4"

STEEL TRUSS DETAILS
FOR
WORLD TRADE CENTER, - N.Y.C.
FOR
THE PORT OF NEW YORK AUTHORITY

FLOOR TRUSS C32T34 59'-0 3/4" OVERALL
WORLD TRADE CENTER TOWERS A-8

FABRICATION BY LACLEDE STEEL COMPANY

FABRICATED AT MADISON, ILLINOIS		DESIGN DRAWING NO. 7-AB1-46	PLATE
APPROVED FOR FABRICATION James White FOR P.O.N.Y.A.	DATE 2/24/69	DRAWN BY: [illegible] DATE JAN. 23, 1969	
APPROVED FOR FABRICATION BY FOR FABRICATOR	DATE	CHECKED BY: T.M.CHURA DATE JAN. 23, 1969	IN CHARGE OF PROD. DEV.
DETAILED BY: A CARL WEBER		FABRICATION CONT. NO. W.T.C. 221	SHEET NO. ST234

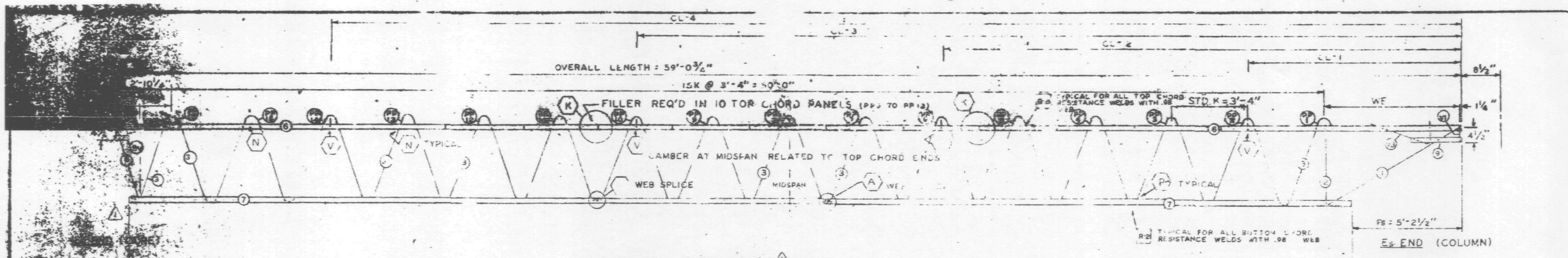

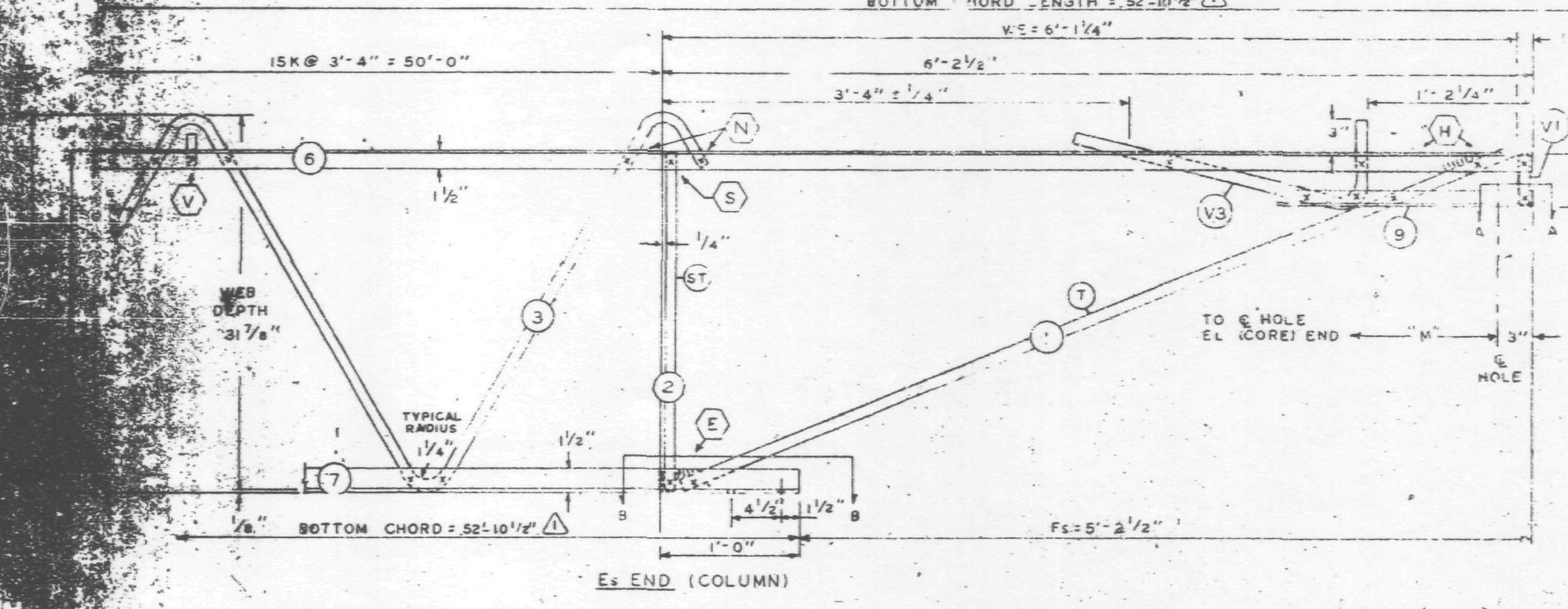

TRUSS ELEVATION

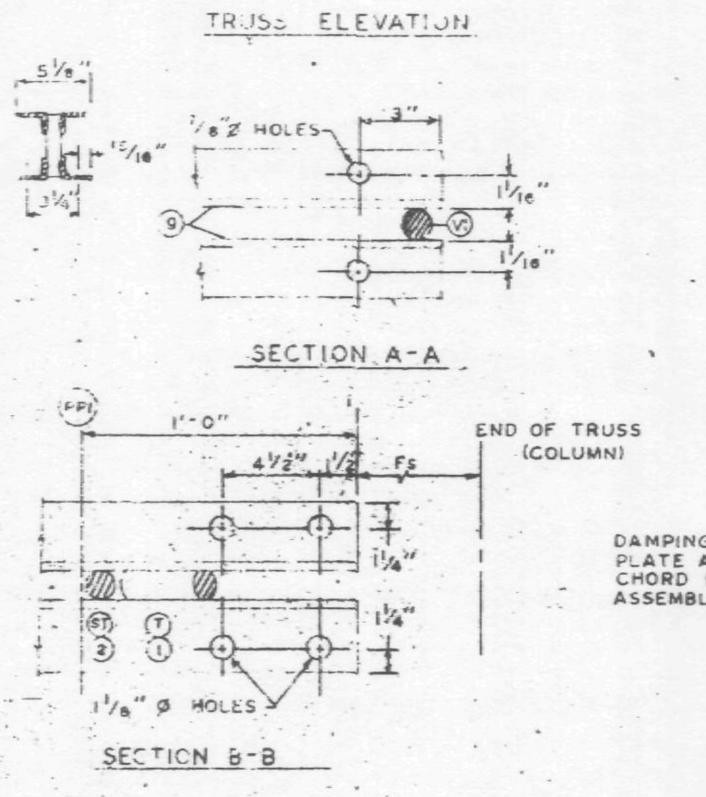

ALL PANEL POINTS RESISTANCE WELDED (x)
ARC WELDS INDICATED AT SHADED AREAS AND AT BOTTOM CHORD WEB SPLICES
ALL WELD DETAILS SHOWN ON SHEETS ST290, ST291, ST292, ST293.

SEE SHEET ST295 FOR VI & V3 DETAILS
LETTERS IN HEXAGON INDICATE WELD DETAILS, i.e. (A)
LETTERS AND NUMBERS IN SQUARES INDICATE RESISTANCE WELD STRENGTH IDENTIFIED IN THE QUALITY CONTROL PROGRAM, i.e., R-6

DAMPING UNIT CONNECTION PLATE ATTACHED TO BOTTOM CHORD (COL. END) IN FIELD ASSEMBLY BY CONTRACT W.T.C. 223.00.

FABRICATION REQUIREMENTS	DESIGN	TOLERANCE
CAMBER AT MIDSPAN	1 15/16"	± 3/8
DESIGN DEPTH	29"	± 1/4"
PANEL K"	3'-4"	- 1/4"
OVERALL LENGTH	59'-	± 3/8"
WEB DEPTH	31 7/8"	± 1/4

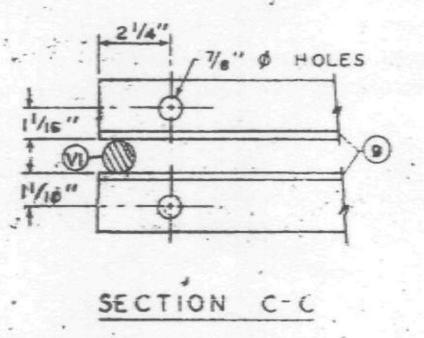

SECTION C-C

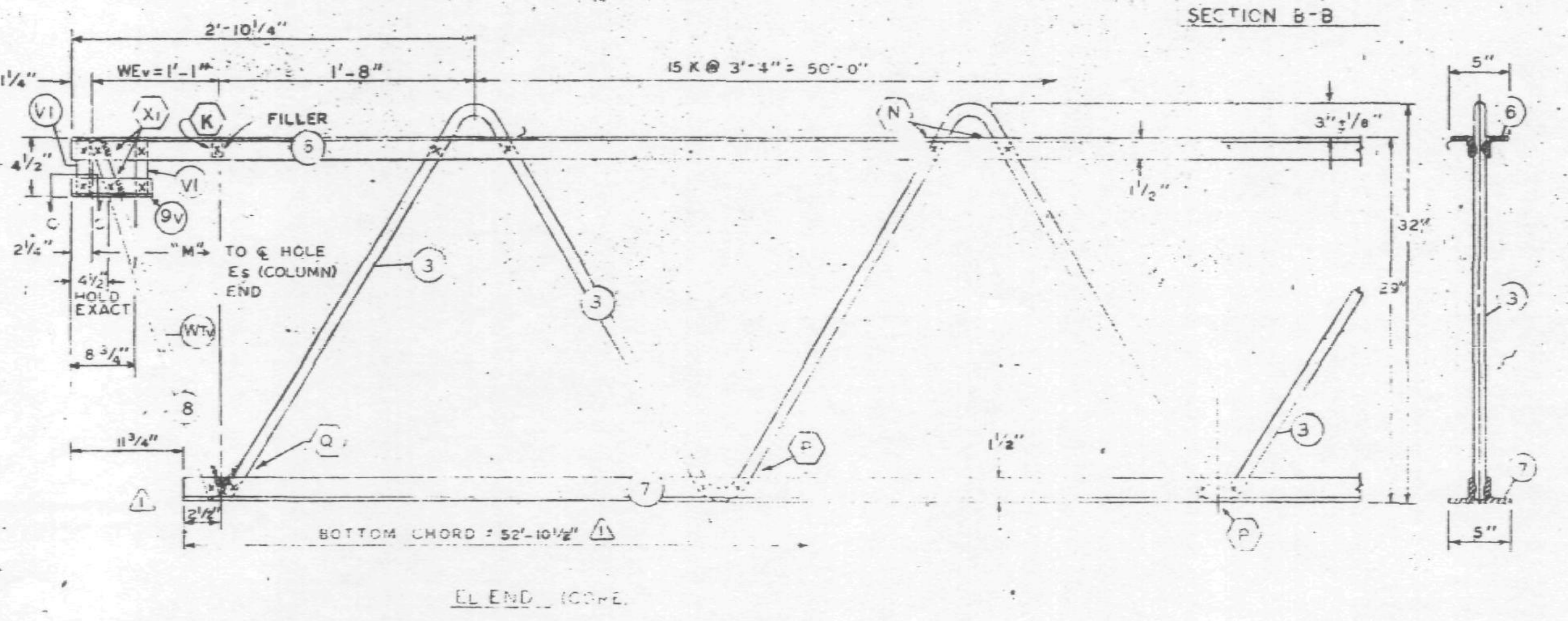

EL END (CORE)

Parts of sheet do not print
Please clarify

NO.	DATE	REVISION	BY
1	1-31-69	AS NOTED	G.D.C.

REF. DRWG.

7-AB1-31	1-6-69
7-AB1-52	2-15-68
7-AB4-14	10-15-68
7-AB1-54	1-6-69
7-AB1-53	7-22-68
7-AB3-70	11-25-68

PAINT
LACLEDE ELECTROCOAT
RED NO. 10001

TRUSS DESIGNATION	TOP CHORD TWO ANGLES				BOTTOM CHORD TWO ANGLES				MAIN WEB "W"					FILLER		CONNECTION							
	MK	TYPE STEEL	CHORD SIZE	LENGTH	MK	TYPE STEEL	CHORD SIZE	LENGTH	MK	TYPE STEEL	DIA	LENGTH	NO. OF K		DIA		DIA	LENGTH	MK	TYPE STEEL		LENGTH	
C32T34-59075	6	A242	2"x1½"x.25	59'-0¾"	7	A242	2"x1½"x.25	52'-10½"	3	A242	.98	97'-0"	15½"K@3'-4"=51'-8"	10	.98	4	.98	3"	—	—	—	—	[illegible]

COLUMN END

Es END TRUSS DESIGNATION	BEARING ANGLES				WE	STRUT				VERTICAL "ST" STRUT				END STIFFENER MK. V1			MK. V3		
	MK	TYPE STEEL	CHORD SIZE	LENGTH		MK	TYPE STEEL	DIA	LENGTH	MK	TYPE STEEL	DIA	LENGTH	TYPE STEEL	DIA	LENGTH	TYPE STEEL	DIA	LENGTH
C32T34-59075	9	A242	2"x1½"x.25	1'-10"	6'-1¼"	[illegible]	A242	[illegible]	2'-5"	2	A36	1.09	2'-4⅞"	A242	1.14	0'-4⅜"	A242	[illegible]	2'-9½"

CORE END

TRUSS DESIGNATION	BEARING ANGLE				WEv	DOUBLE STRUT				DOUBLE STRUT				END STIFFENER MK. VI			WEB "WCV"					WEB "WTV"				
	MK	TYPE STEEL	CHORD SIZE	LENGTH		MK	TYPE STEEL	DIA	LENGTH (2 REQ'D)	MK	TYPE STEEL	DIA	LENGTH	TYPE STEEL	DIA	LENGTH (2 REQ'D)	MK	TYPE STEEL	PCS	DIA	LENGTH	MK	TYPE STEEL	PCS	DIA	LENGTH
C32T34-59075	9V	A242	2"x1½"x.31	10"	1'-1"					—	—	—	—	A242	1.14	4⅜"	—	—	—	—	—	8	A242	1	1.14	2'-6¼"

CHECK DIMENSION FOR TRUSS FAB LOCATION OF TRANS. TRUSS				
CL-1	CL-2	CL-3	CL-4	Fs
9'-8½"	22'-10½"	36'-2½"	49'-6½"	5'-2½"

2/19/69 SC

STEEL TRUSS DETAILS
FOR
WORLD TRADE CENTER - N.Y.C.
FOR
THE PORT OF NEW YORK AUTHORITY

FLOOR TRUSS C32T34 59'-0¾" OVERALL
WORLD TRADE CENTER TOWERS A-B

FABRICATION BY LACLEDE STEEL COMPANY
FABRICATED AT MADISON, ILLINOIS
DESIGN DRAWING NO. 7-AB1-45
PLATE
APPROVED FOR FABRICATION BY FOR P.O.N.Y.A. DATE
DRAWN BY: dec DATE JAN. 23, 1969
APPROVED FOR FABRICATION BY FOR FABRICATOR DATE
CHECKED BY: T.M. CHURA DATE JAN. 23, 1969
IN CHARGE OF PROD. DEV.
DETAILED BY A. CARL WEBER
FABRICATION CONT. NO. W.T.C. 221
SHEET NO. ST234

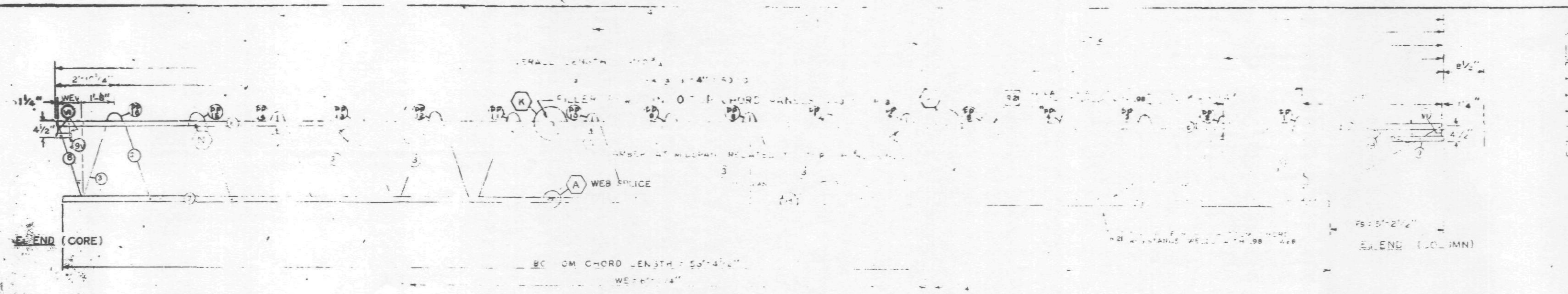

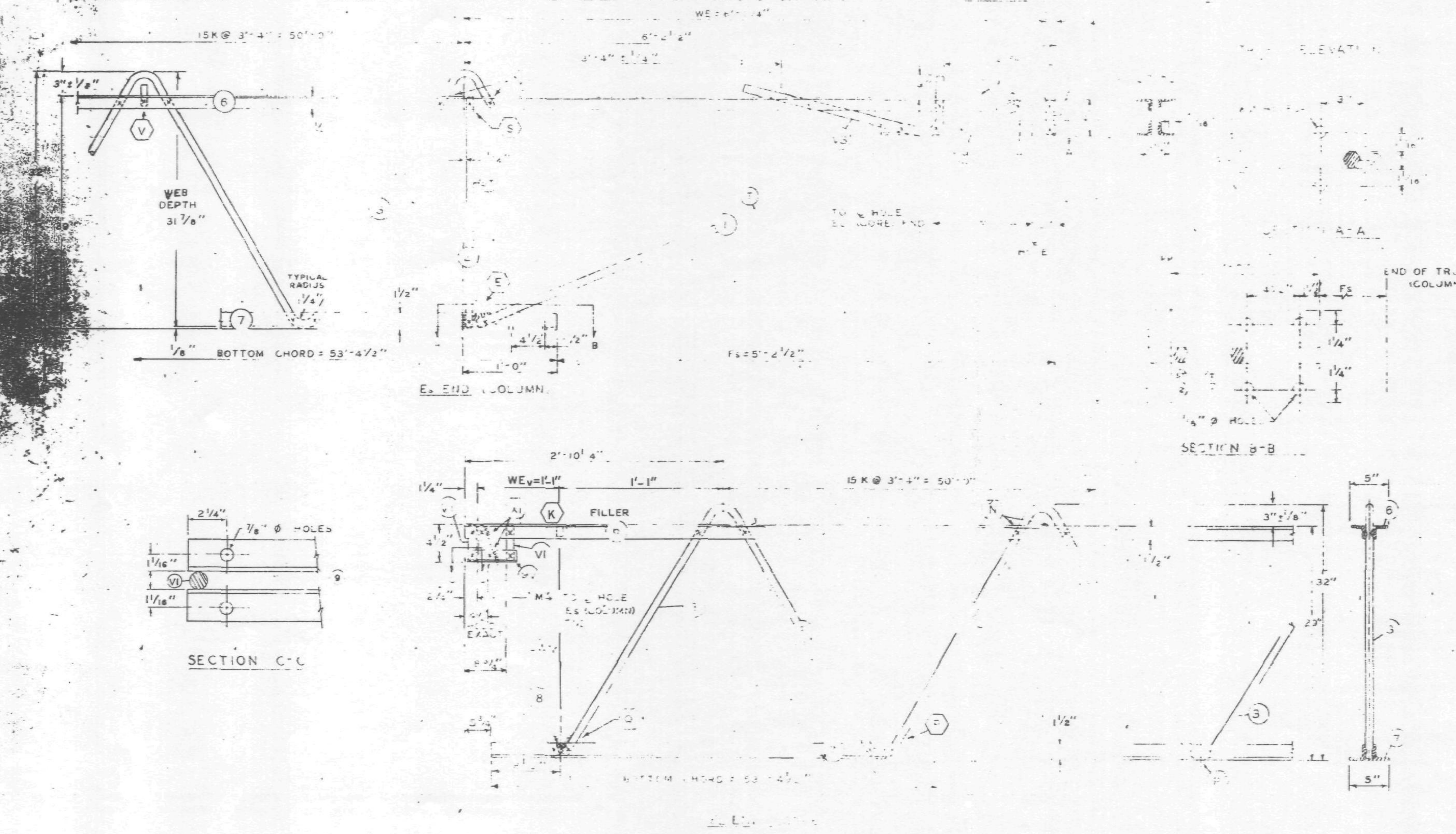

FABRICATION REQUIREMENTS	DESIGN	TOLERANCE
CAMBER AT MIDSPAN	1 15/16"	± 3/8"
DESIGN DEPTH		± 1/4"
PANEL "K"	4"	± 1/4"
OVERALL LENGTH	59'-0¾"	± 1/8"
WEB DEPTH	31 7/8"	± 1/4

ALL PANEL POINTS RESISTANCE WELDED (X)
ARC WELD INDICATED AT SHADED AREAS
AND AT BOTTOM CHORD WEB SPLICES (mmmm)
ALL WELD DETAILS SHOWN ON SHEETS ST290, ST291, ST292, ST293.

SEE SHEET ST295 FOR V1 & V3 DETAILS.
LETTERS IN HEXAGON INDICATE WELD DETAILS, ie, (A)
LETTERS AND NUMBERS IN SQUARES INDICATE RESISTANCE WELD STRENGTH IDENTIFIED IN THE QUALITY CONTROL PROGRAM, ie., R-6

DAMPING UNIT CONNECTION
PLATE ATTACHED TO BOTTOM
CHORD (COL. END) IN FIELD
ASSEMBLY BY CONTRACT W.T.C. 223.00.

NO.	DATE	REVISION	BY

VOID

REF. DRWG.

7-AB1-31	1-6-69
7-AB1-52	2-15-68
7-AB4-14	10-15-68
7-AB1-54	1-6-69
7-AB1-53	7-22-68
7-AB3-70	11-25-68

PAINT
LACLEDE ELECTROCOAT
RED NO. 10001

TRUSS DESIGNATION	MK	TYPE STEEL	CHORD SIZE		TYPE STEEL																	
C32T34-59075	6	A242	2"x1½"x.25	[illegible]	A242	2"x1½"x.25	53'-4½"	3	A242	.98	97'-0"	15½"K@3'-4"=51'-8"	10	.98	4	.98	3"					

COLUMN END	EL END	TRUSS DESIGNATION	MK	TYPE STEEL	CHORD SIZE					
		C32T34-59075	9	A242	2"x1½"x.25	[illegible]	[illegible]	[illegible]	[illegible]	[illegible]

BEARING DIMENSION FOR TRUSS FAB
LOCATION OF TRANS. TRUSS
2'-6½" 22'-10 ½" 38'-2½" 43'-6½" 5'-2½"

CORE END	EL END	TRUSS DESIGNATION	MK	BEARING ANGLE			DOUBLE STRUT	DOUBLE STRUT	END STIFFENER	WEB	
		C32T34-59075	9V	A242	2"x1½"x.31	10"	[illegible]	A242	.14	A242	1.14

STEEL TRUSS DETAILS
FOR
WORLD TRADE CENTER - N.Y.C.
FOR
THE PORT OF NEW YORK AUTHORITY

FLOOR TRUSS C32T34 59'-0¾" OVERALL
WORLD TRADE CENTER TOWERS A-B

FABRICATION BY LACLEDE STEEL COMPANY

FABRICATED AT MADISON, ILLINOIS	DESIGN DRAWING NO. 7-AB1-45	PLATE
APPROVED FOR FABRICATION DATE FOR PONYA	DRAWN BY dcc DATE JAN. 23, 1969	
APPROVED FOR FABRICATION DATE FOR FABRICATOR	CHECKED BY T.M. CHURA DATE JAN. 23, 1969	IN CHARGE OF PROD. DCK
DETAILED BY A. CARL WEBER	FABRICATION CONT. NO. W.T.C. 221	SHEET NO ST 234

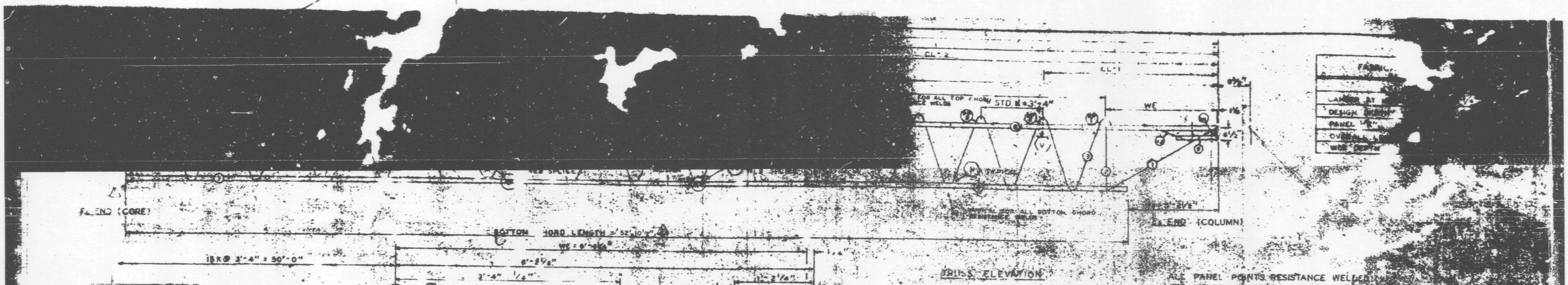

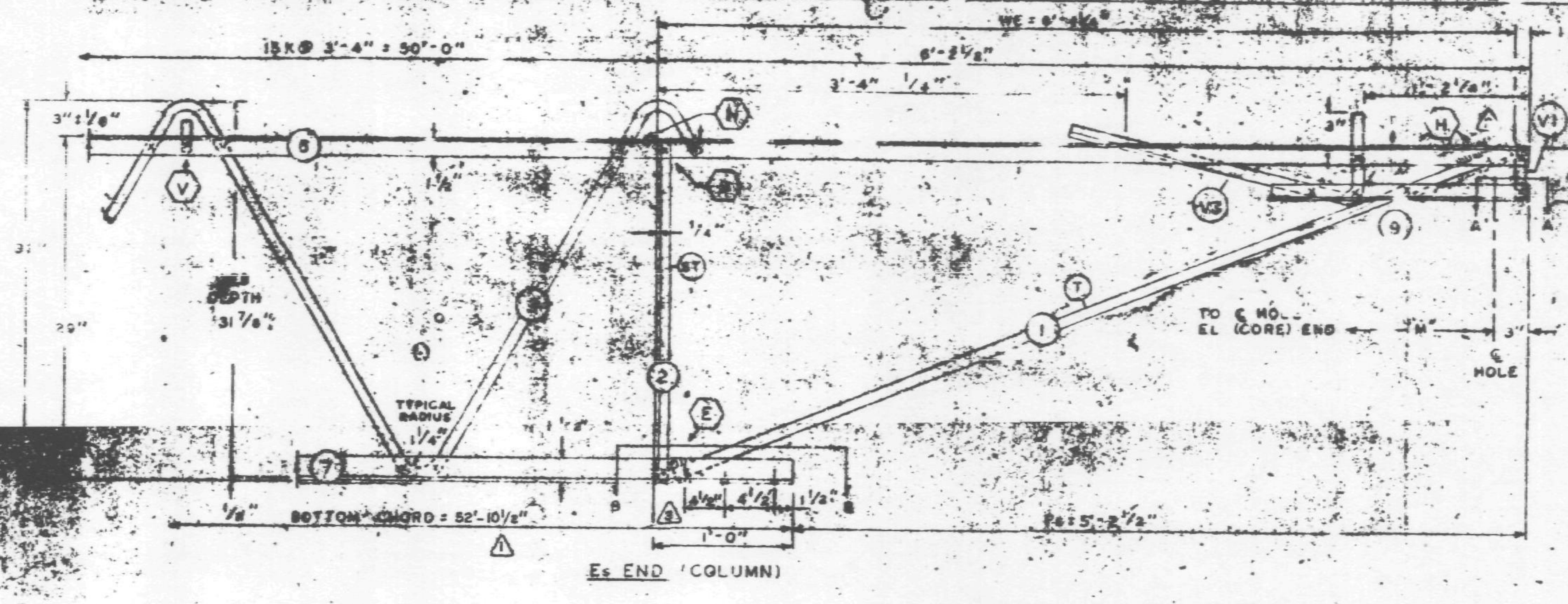

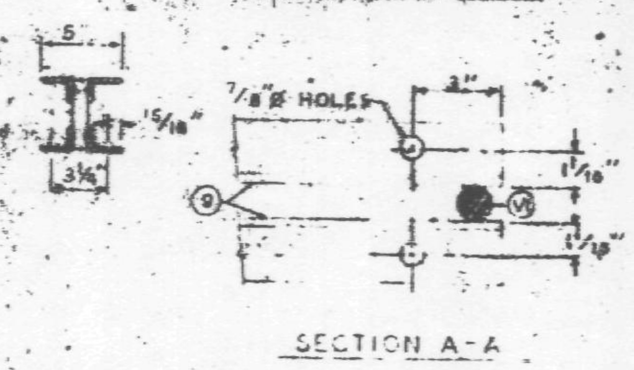

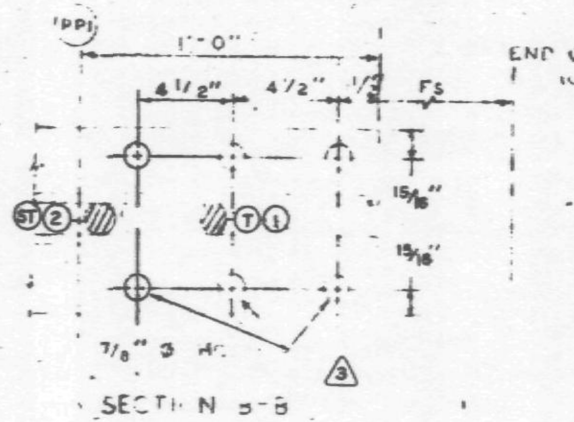

ALL PANEL POINTS RESISTANCE WELDED. ARC WELDS INDICATED AT SHADED AREAS AND AT BOTTOM CHORD, WEB SPLICES. ALL WELD DETAILS SHOWN ON SHEETS ST291, ST292, ST293, ST294.

SEE SHEET ST 295 FOR V1 & V3 DETAILS. LETTERS IN HEXAGON INDICATE WELD DETAILS. LETTERS AND NUMBERS IN SQUARES INDICATE RESISTANCE WELD STRENGTH IDENTIFIED IN THE QUALITY CONTROL PROGRAM, I.e., R21

DAMPING UNIT CONNECTION PLATE ATTACHED TO BOTTOM CHORD (COL END) IN FIELD. ASSEMBLY BY CONTRACT W.T.C. 223.00.

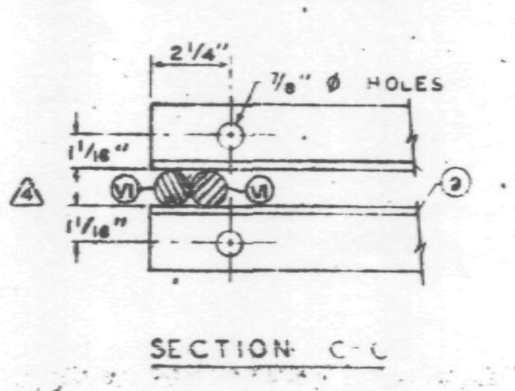

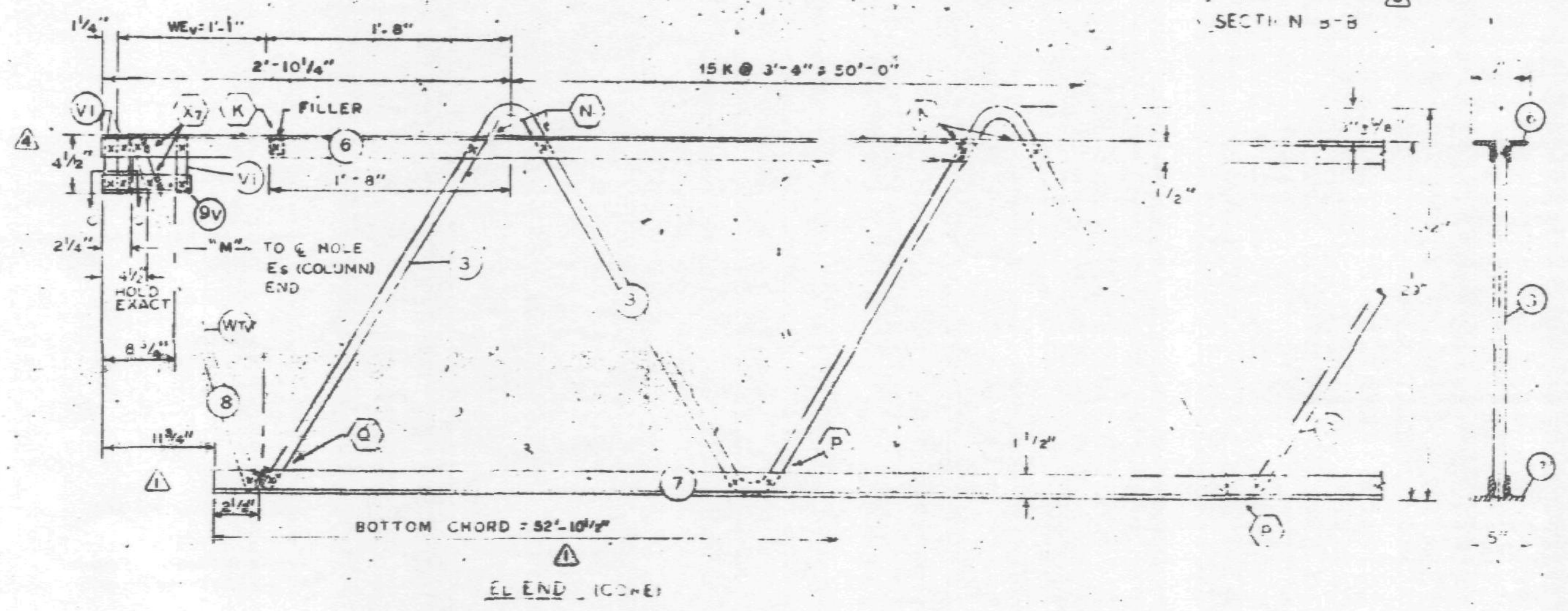

Mark	Date	Revision	By
4	3-3-69	END STIFFENER	D.C.
3	2-28-69	AS NOTED	G.D.
2	2-18-69	AS NOTED	T.M.
1	1-31-69	AS NOTED	G.D.

REF DRWG.

7-ABI-48	1-6-69
7-ABI-52	2-18-69
7-ABI-14	[illegible]
7-ABI-54	1-6-69
7-ABI-53	[illegible]
7-ABI-56	[illegible]

PAINT

LACLEDE ELECTROCOAT RED NO. 10001

TRUSS DESIGNATION	TOP CHORD TWO ANGLES MK	TYPE STEEL	CHORD SIZE	LENGTH	BOTTOM CHORD TWO ANGLES (1) MK	TYPE STEEL	CHORD SIZE	LENGTH	MAIN WEB "W" MK	TYPE STEEL	DIA	LENGTH	NO. OF [illegible]	TRANSITION FILLER MK	DIA	MK	DIA	LENGTH	END PLATE MK	TYPE STEEL	SIZE	LENGTH	"M" ½ HOLES
C32T35-59075	6	A242	2"x1½"x.25"	59'-0¾"	7	A242	2"x1½"x.25"	52'-10½"	3	A242	.98	97'-0"	15½ K @ 3'-4" = 51'-8"	11	.98	4	.98	0'-3"	—	—	—	—	58'-7½"

COLUMN END

Es END TRUSS DESIGNATION	BEARING ANGLES MK	TYPE STEEL	CHORD SIZE	LENGTH	WE	DIAGONAL STRUT (2) MK	TYPE STEEL	DIA	LENGTH	VERTICAL "ST" STRUT MK	TYPE STEEL	DIA	LENGTH	END STIFFENER MK. 7 TYPE STEEL	DIA	LENGTH	MK. V3 TYPE STEEL	DIA	LENGTH
C32T35 59075	9	A242	2"x1½"x.37" (2)	1'-10"	6'-1¼"	1	A242	.98	6'-4"	2	A242	.98	2'-4⅞"	A242	.98	0'-4⅞"	A242	[illegible]	2'-9½"

CORE END

EL END TRUSS DESIGNATION	BEARING ANGLE MK	TYPE STEEL	CHORD SIZE	LENGTH	WEv	DOUBLE STRUT MK	TYPE STEEL	DIA	LENGTH	DOUBLE STRUT MK	TYPE STEEL	DIA	LENGTH	END STIFFENER (4) MK. V1 TYPE STEEL	DIA	LENGTH 3 REQ'D	WEB "WCv" MK	TYPE STEEL	[illegible]	[illegible]	LENGTH	WEB "WTv" MK	TYPE STEEL	[illegible]	DIA	LENGTH
C32T35-59075	9V	A242	2"x1½"x.37" (2)	0'-10"	1'-1"	—	—	—	—	—	—	—	—	A242	.98	4⅜"	—	—	—	—	—	8	A242	1	.98	2'-8¼"

CHECK DIMENSION FOR TRUSS FAB

LOCATION OF TRANS CROSS				
CL-1	CL-2	CL-3	CL-4	Fs
9'-8½"	22'-10½"	36'-2½"	49'-6½"	5'-2½"

STEEL TRUSS DETAILS
FOR
WORLD TRADE CENTER - N.Y.C.
FOR
THE PORT OF NEW YORK AUTHORITY

FLOOR TRUSS C32T35 — 59'-0¾" OVERALL

WORLD TRADE CENTER TOWERS A-B

FABRICATION BY LACLEDE STEEL COMPANY

FABRICATED AT MADISON, ILLINOIS	DESIGN DRAWING NO. 7-ABI-48	PLATE
APPROVED FOR FABRICATION FOR P.O.N.Y.A. James White — DATE 3/13/69	DRAWN BY [illegible] DATE JAN 22, 1969	
APPROVED FOR FABRICATION BY FOR FABRICATION — DATE	CHECKED BY T.M. CHURA DATE JAN. 22, 1969	IN CHARGE OF PROD. DEV.
DETAILED BY LACLEDE [illegible]	FABRICATION CONT. NO. W.T.C. 221	SHEET NO. ST 295

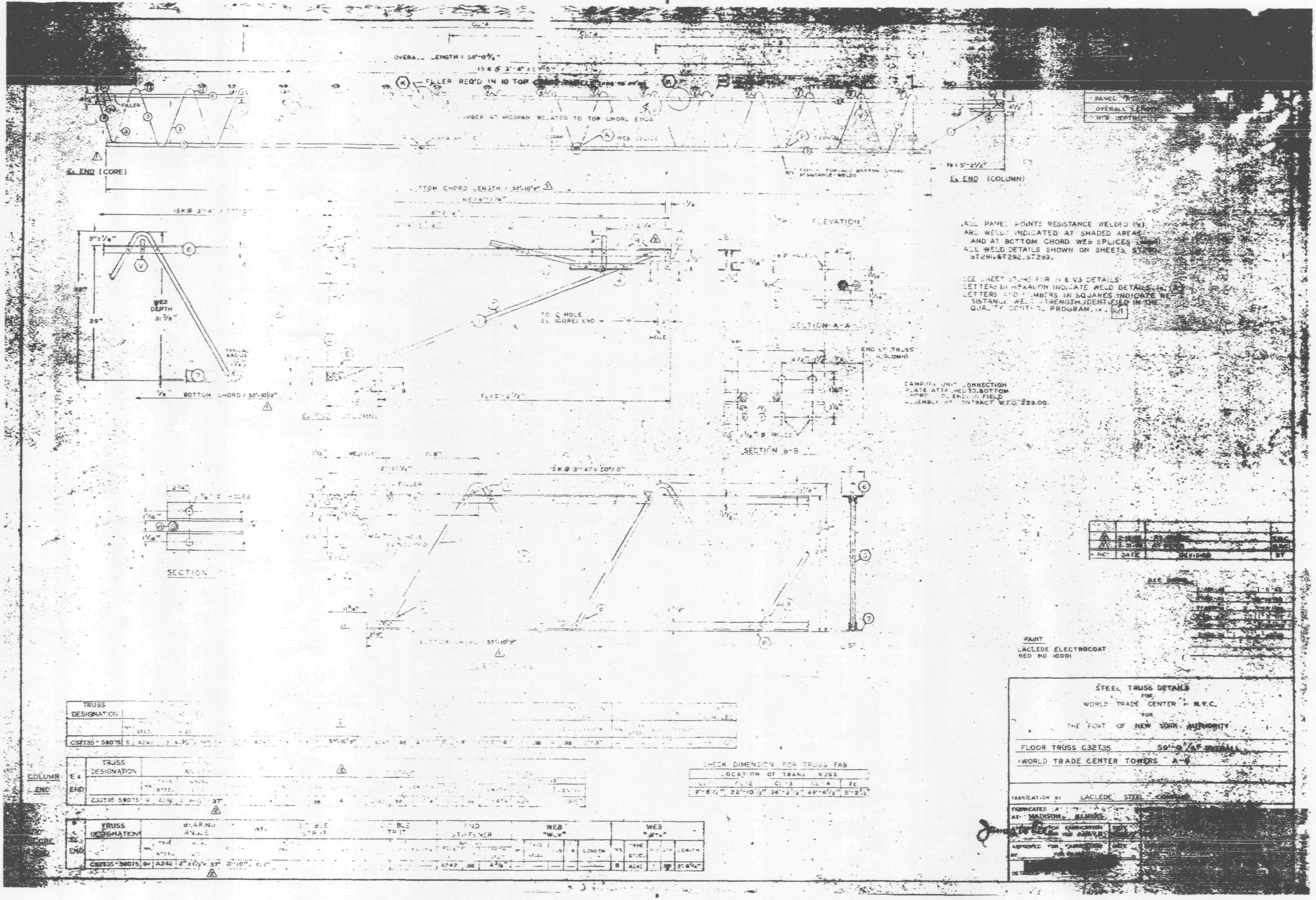
OVERALL LENGTH = 59'-0 3/4"
15 K @ 3'-4" = 50'-0"
FILLER REQ'D IN 10 TOP CHORD PANELS
CAMBER AT MIDSPAN RELATED TO TOP CHORD ENDS
WEB SPLICE
℄ END (CORE)
℄ END (COLUMN)
BOTTOM CHORD LENGTH = 52'-10 1/2"
ELEVATION
ALL PANEL POINTS RESISTANCE WELDED (X).
ARC WELDS INDICATED AT SHADED AREAS
AND AT BOTTOM CHORD WEB SPLICES
ALL WELD DETAILS SHOWN ON SHEETS ST290,
ST291, ST292, ST293.
LETTERS IN HEXAGON INDICATE WELD DETAILS
LETTERS AND NUMBERS IN SQUARES INDICATE RESISTANCE WELD STRENGTH IDENTIFIED IN THE QUALITY CONTROL PROGRAM.
WEB DEPTH 31 7/8"
TYPICAL RADIUS
BOTTOM CHORD = 52'-10 1/2"
SECTION A-A
SECTION B-B
END OF TRUSS
DAMPING UNIT CONNECTION PLATE ATTACHED TO BOTTOM CHORD OF END IN FIELD ASSEMBLY BY CONTRACT W.T.C. 223.00.
15 K @ 3'-4" = 50'-0"
FILLER
15/16" Ø HOLES
SECTION
PAINT
LACLEDE ELECTROCOAT
RED NO 10001
STEEL TRUSS DETAILS
FOR
WORLD TRADE CENTER - N.Y.C.
FOR
THE PORT OF NEW YORK AUTHORITY
FLOOR TRUSS C32T35 59'-0 3/4" OVERALL
WORLD TRADE CENTER TOWERS A-B
FABRICATION BY LACLEDE STEEL COMPANY
FABRICATED AT MADISON, ILLINOIS
CHECK DIMENSION FOR TRUSS FAB
LOCATION OF TRANS TRUSS
9'-6 1/2" 22'-10 1/2" 36'-2 1/2" 49'-6 1/2" 5'-2 1/2"
TRUSS DESIGNATION
C32T35-59075
COLUMN END
CORE END
BEARING ANGLE
END STIFFENER
WEB
A242 2" x 1 1/2" 37"

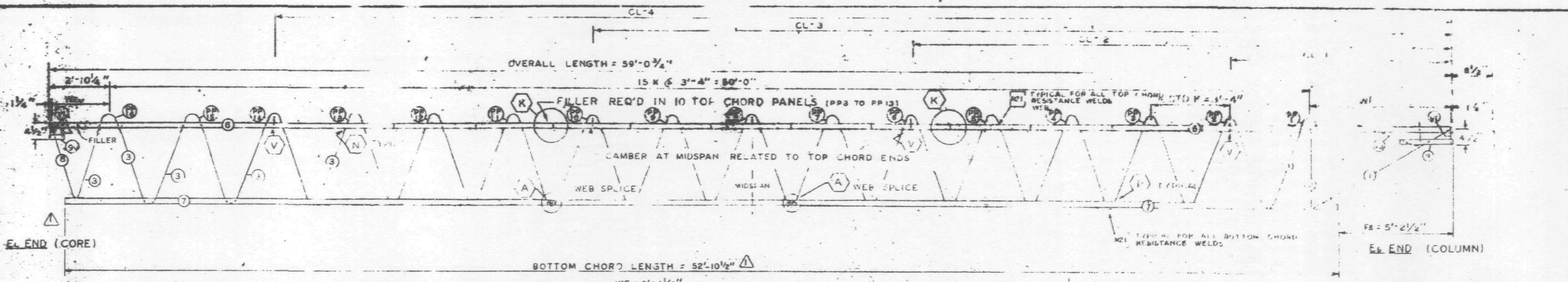

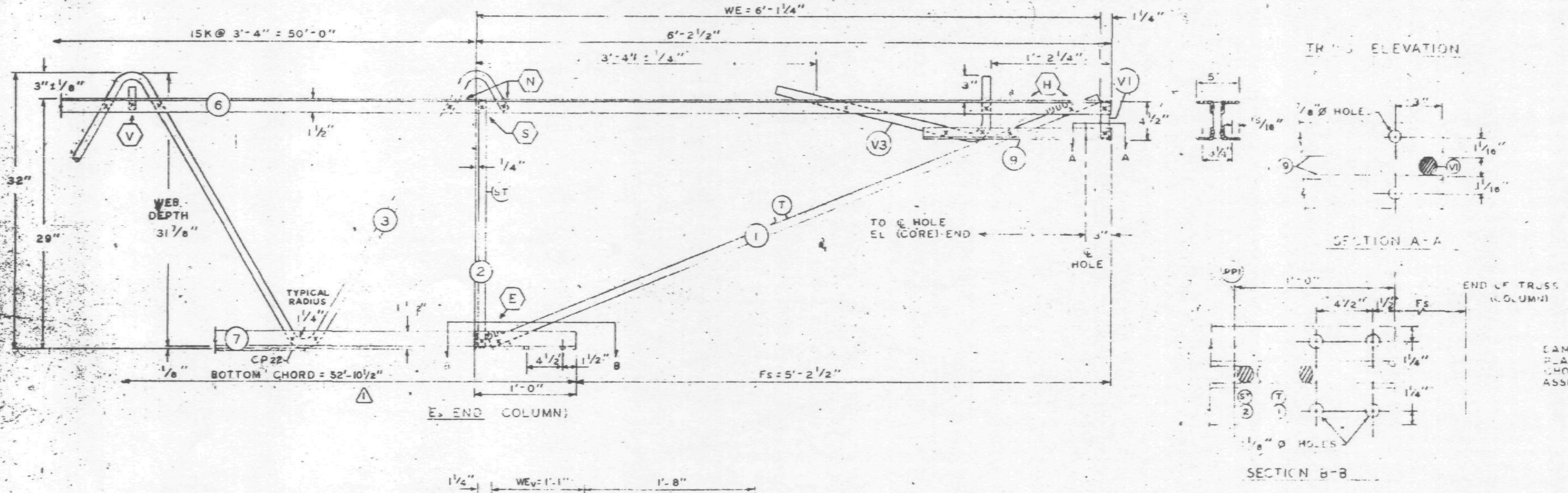

LAMPING UNIT CONNECTION PLATE ATTACHED TO BOTTOM CHORD. BOLTED IN FIELD ASSEMBLY BY CONTRACT W.T.C. 223.00.

ALL PANEL POINTS RESISTANCE WELDED (x)
ARC WELDS INDICATED AT SHADED AREAS AND AT BOTTOM CHORD WEB SPLICES
ALL WELD DETAILS SHOWN ON SHEETS ST290, ST291, ST292, ST293.

SEE SHEET ST295 FOR VI & V3 DETAILS
LETTERS IN HEXAGON INDICATE WELD DETAILS, ie, (A)
LETTERS AND NUMBERS IN SQUARES INDICATE RESISTANCE WELD STRENGTH IDENTIFIED IN THE QUALITY CONTROL PROGRAM, ie, [R21]

FABRICATION REQUIREMENTS

	DESIGN	TOLERANCE
CAMBER AT MIDSPAN	¾"	± [illegible]
DESIGN DEPTH	29"	± [illegible]
PANEL "K"	3'	[illegible]
OVERALL LENGTH	5[illegible] ¾"	± 3/8
WEB DEPTH	31 ⅞"	± [illegible]

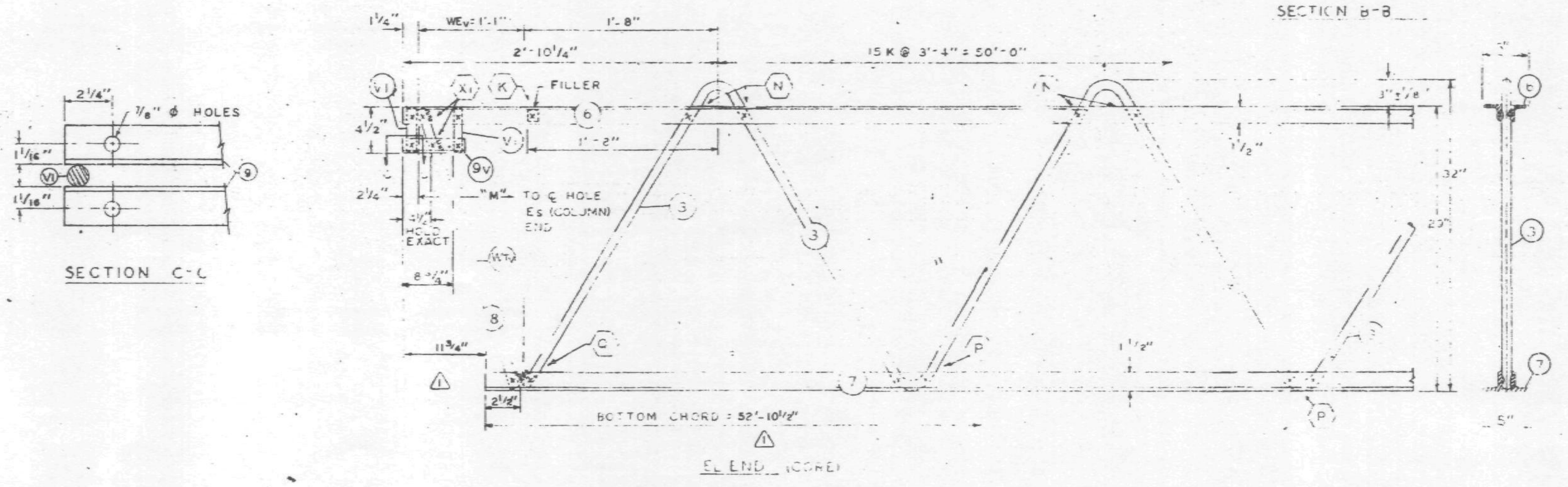

Parts of sheet do not print - Please clarify

NO	DATE	REVISION	BY
1	1-31-69	AS NOTED	G.D.C.

REF DRWG.

7-A81-48	1-6-69
7-A81-52	2-15-68
7-A84-14	1-3-68
7-A81-54	1-6-69
7-A81-53	7-23-68
7-A83-70	11-26-68

PAINT
LACLEDE ELECTROCOAT
RED NO. 10001

TRUSS DESIGNATION	TOP CHORD TWO ANGLES				BOTTOM CHORD TWO ANGLES				MAIN WEB "A"					FILLER		CONNECTION FILLER			CHORD PLATE				⅞" ø HOLES
	MK	TYPE STEEL	CHORD SIZE	LENGTH	MK	TYPE STEEL	CHORD SIZE	LENGTH	MK	TYPE STEEL	DIA	LENGTH	NO. OF K	NO.	DIA	NO.	DIA	LENGTH	MK	TYPE STEEL	SIZE	LENGTH	
C32T35 - 59075	6	A242	2"x1½"x.25"	59'-0¾	7	A242	2"x1½"x.25"	52'-10½"	3	A242	.98	97'-0"	15½ K @ 3'-4" = 51'-8"	11	.98	4	.98	0'-3"	—	—	—	—	58'-7½"

COLUMN END

E's END	TRUSS DESIGNATION	BEARING ANGLES				WE	DIAGONAL "T" STRUT				VERTICAL "ST" STRUT				END STIFFENER MK. VI			END STIFFENER MK. V3		
		MK	TYPE STEEL	CHORD SIZE	LENGTH		MK	TYPE STEEL	DIA	LENGTH	MK	TYPE STEEL	DIA	LENGTH	TYPE STEEL	DIA	LENGTH	TYPE STEEL	DIA	LENGTH
	C32T35 59075	9	A242	2"x1½"x.25	1'-10"	6'-1¼'	1	A242	.98	6'-5"	2	A242	.98	2'-4⅞"	A242	.98	0'-4⅜"	A242	.98	2'-9½"

TRUSS DESIGNATION	BEARING ANGLE				WEv	DOUBLE STRUT				DOUBLE STRUT				END STIFFENER MK. VI			WEB "WCv"					WEB "WTv"				
	MK	TYPE STEEL	CHORD SIZE	LENGTH		MK	TYPE STEEL	DIA	LENGTH	MK	TYPE STEEL	DIA	LENGTH	TYPE STEEL	DIA	LENGTH (2 REQ'D)	MK	TYPE STEEL	PCS	DIA	LENGTH	MK	TYPE STEEL	PCS	DIA	LENGTH
C32T35-59075	9V	A242	2"x1½"x.25	0'-10"	1'-1"	-		-	-	—	——	—	——	A242	.98	4⅜"	—	——	—	—	——	8	A242	1	.98	2'-6¼"

CHECK DIMENSION FOR TRUSS FAB

LOCATION OF TRANS TRUSS				
CL-1	CL-2	CL-3	CL-4	Fs
9'-6½"	22'-10½"	36'-2½"	49'-6½"	5'-2½"

2/19/69 SK

STEEL TRUSS DETAILS
FOR
WORLD TRADE CENTER - N.Y.C.
FOR
THE PORT OF NEW YORK AUTHORITY

FLOOR TRUSS C32T35 59'-0¾" OVERALL
WORLD TRADE CENTER TOWERS A-B

FABRICATION BY LACLEDE STEEL COMPANY

FABRICATED AT MADISON, ILLINOIS		DESIGN DRAWING NO. 7-A81-48	PLATE
APPROVED FOR FABRICATION BY FOR P.O.N.Y.A.	DATE	DRAWN BY: DATE JAN. 22, 1969.	
APPROVED FOR FABRICATION BY FOR FABRICATOR	DATE	CHECKED BY: T.M. CHURA DATE JAN. 22, 1969.	IN CHARGE OF PROD. DEV.
DETAILED BY A CARL WEBER		FABRICATION CONT. NO. W.T.C. 221	SHEET NO. ST 235

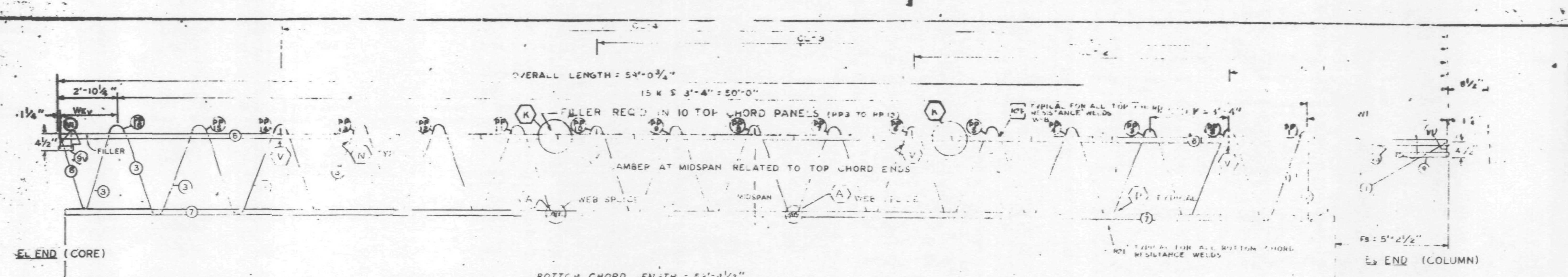

ALL PANEL POINTS RESISTANCE WELDED (x)
ARC WELDS INDICATED AT SHADED AREAS
AND AT BOTTOM CHORD WEB SPLICES
ALL WELD DETAILS SHOWN ON SHEETS ST290, ST291, ST292, ST293.

SEE SHEET ST295 FOR VI & V3 DETAILS
LETTERS IN HEXAGON INDICATE WELD DETAILS, ie. (A)
LETTERS AND NUMBERS IN SQUARES INDICATE RESISTANCE WELD STRENGTH IDENTIFIED IN THE QUALITY CONTROL PROGRAM, ie. [R21]

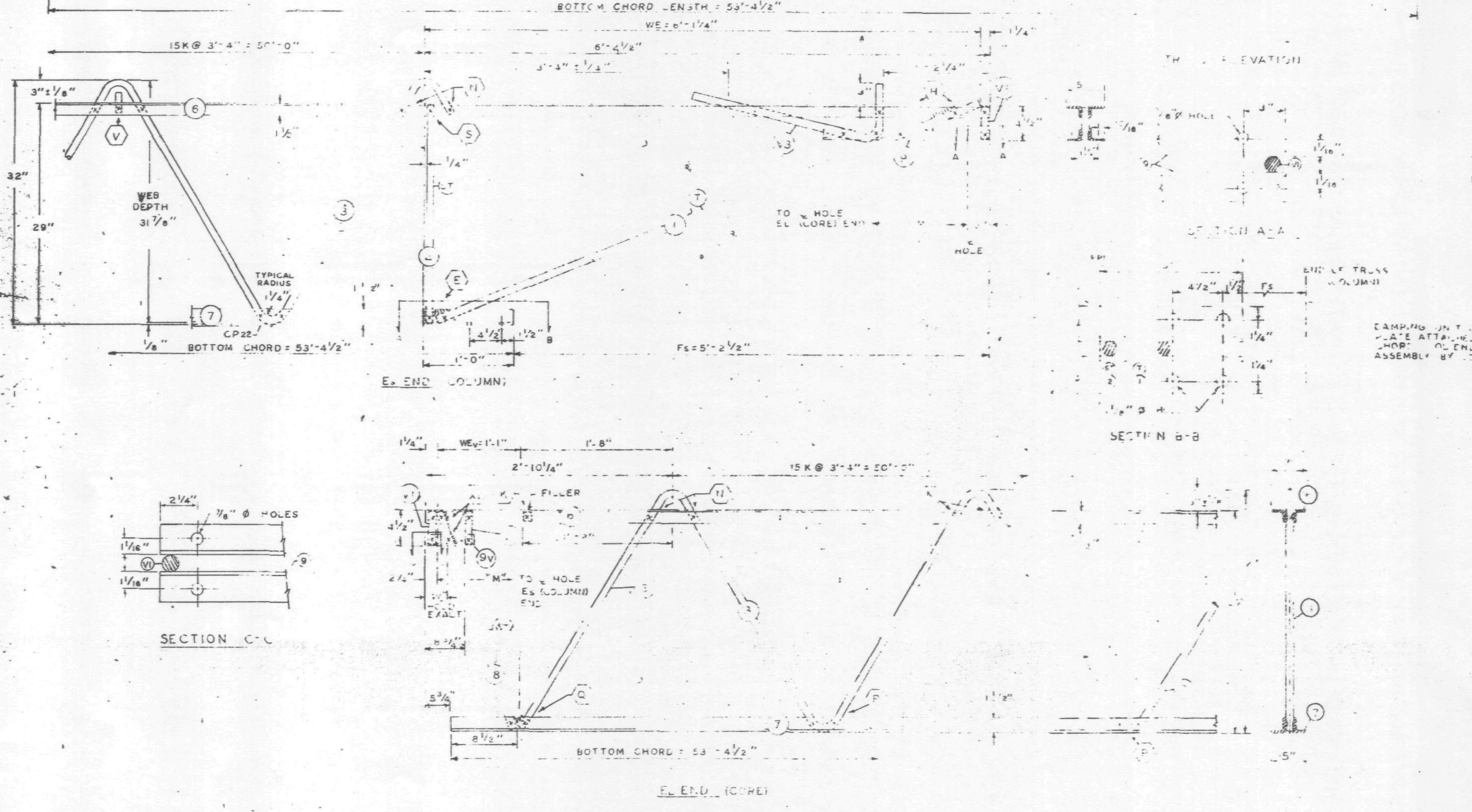

CAMPING UNIT CONNECTION PLATE ATTACHED TO BOTTOM CHORD OF TRUSS IN FIELD ASSEMBLY BY CONTRACT W.T.C. 223.00.

FABRICATION REQUIREMENTS	DESIGN	TOLERANCE
CAMBER AT MIDSPAN	3/4"	± 3/8"
DESIGN DEPTH	29	± 3/4"
PANEL "R"	[illegible]	± 1/4"
OVERALL LENGTH	59'-0 3/4"	± 3/
WEB DEPTH	31 7/8"	± 1/4

NO.	DATE	REVISION	BY

REF. DRWG.

7-ABI-48	1-6-69
7-ABI-52	2-15-68
7-AB4-14	1-3-68
7-ABI 54	1-6-69
7-ABI-53	7-22-68
7-AB3 70	11-29-68

VOID

PAINT
LACLEDE ELECTROCOAT
RED NO. 10001

TRUSS DESIGNATION	TOP CHORD TWO ANGLES				BOTTOM CHORD TWO ANGLES				MAIN WEB "A"					FILLER		CONNECTION FILLER			CHORD PLATE				13/16" Ø HOLES
	MK.	TYPE STEEL	CHORD SIZE	LENGTH	MK.	TYPE STEEL	CHORD SIZE	LENGTH	MK.	TYPE STEEL	DIA.	LENGTH	NO. OF K	NO.	DIA.	NO.	DIA.	LENGTH	MK.	TYPE STEEL	SIZE	LENGTH	
C32T35-59075	6	A242	2"x1 1/2"x.25"	59'-0 3/4"	7	A242	2"x1 1/2"x.25"	53'-4 1/2"	3	A242	.98	97'-0"	15 1/2 K @ 3'-4" = 51'-8"	11	.98	4	.98	0'-3"	—	—	—	—	58'-7 1/2"

COLUMN END	TRUSS DESIGNATION	BEARING ANGLES				WE	BEARING STRUT				VERTICAL "ST" STRUT				END STIFFENER MK. V1			END STIFFENER MK. V3		
		MK.	TYPE STEEL	CHORD SIZE	LENGTH		MK.	TYPE STEEL	DIA.	LENGTH	MK.	TYPE STEEL	DIA.	LENGTH	TYPE STEEL	DIA.	LENGTH	TYPE STEEL	DIA.	LENGTH
	C32T35 59075	9	A242	2"x1 1/2"x.25	1'-10"	6'-1 1/4"	1	A242	.98	6'-5"	2	A242	.98	2'-4 7/8"	A242	.98	0'-4 3/8"	A	.98	2'-9 1/2"

CORE END	TRUSS DESIGNATION	BEARING ANGLE				WEV	DOUBLE STRUT				DOUBLE STRUT				END STIFFENER MK. V1			WEB "WCV"					WEB "WTV"				
		MK.	TYPE STEEL	CHORD SIZE	LENGTH		MK.	TYPE STEEL	DIA.	LENGTH	MK.	TYPE STEEL	DIA.	LENGTH	TYPE STEEL	DIA.	LENGTH 2 REQ'D	MK.	TYPE STEEL	PCS	DIA.	LENGTH	MK.	TYPE STEEL	PCS	DIA.	LENGTH
	C32T35-59075	9V	A242	2"x1 1/2"x.25	0'-10"	1'-1"				—	—	—	—	—	A242	.98	4 3/8"	—	—	—	—	—	8	A242	1	.98	2'-8 1/4"

CHECK DIMENSION FOR TRUSS FAB

LOCATION OF TRANS. TRUSS				
CL-1	CL-2	CL-3	CL-4	Fs
0'-6 1/2"	22'-10 1/2"	36'-2 1/2"	49'-6 1/2"	5'-2 1/2"

STEEL TRUSS DETAILS
FOR
WORLD TRADE CENTER - N.Y.C.
FOR
THE PORT OF NEW YORK AUTHORITY

FLOOR TRUSS C32T35 59'-0 3/4" OVERALL
WORLD TRADE CENTER TOWERS A-B

FABRICATION BY: LACLEDE STEEL COMPANY			
FABRICATED AT MADISON, ILLINOIS		DESIGN DRAWING NO. 7-ABI-48	PLATE
APPROVED FOR FABRICATION BY ___ FOR P.O.N.Y.A.	DATE	DRAWN BY: [illegible] DATE JAN. 22, 1969	
APPROVED FOR FABRICATION BY ___ FOR FABRICATOR	DATE	CHECKED BY: T.M.CHURA DATE JAN. 22, 1969	IN CHARGE OF PROD. DEV.
DETAILED BY A CARL WEBER		FABRICATION CONT. NO. W.T.C. 221	SHEET NO. ST 235

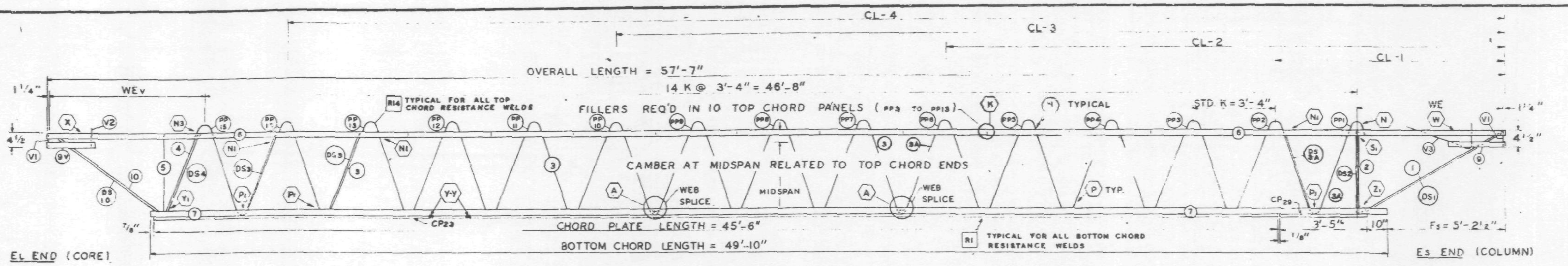

TRUSS ELEVATION

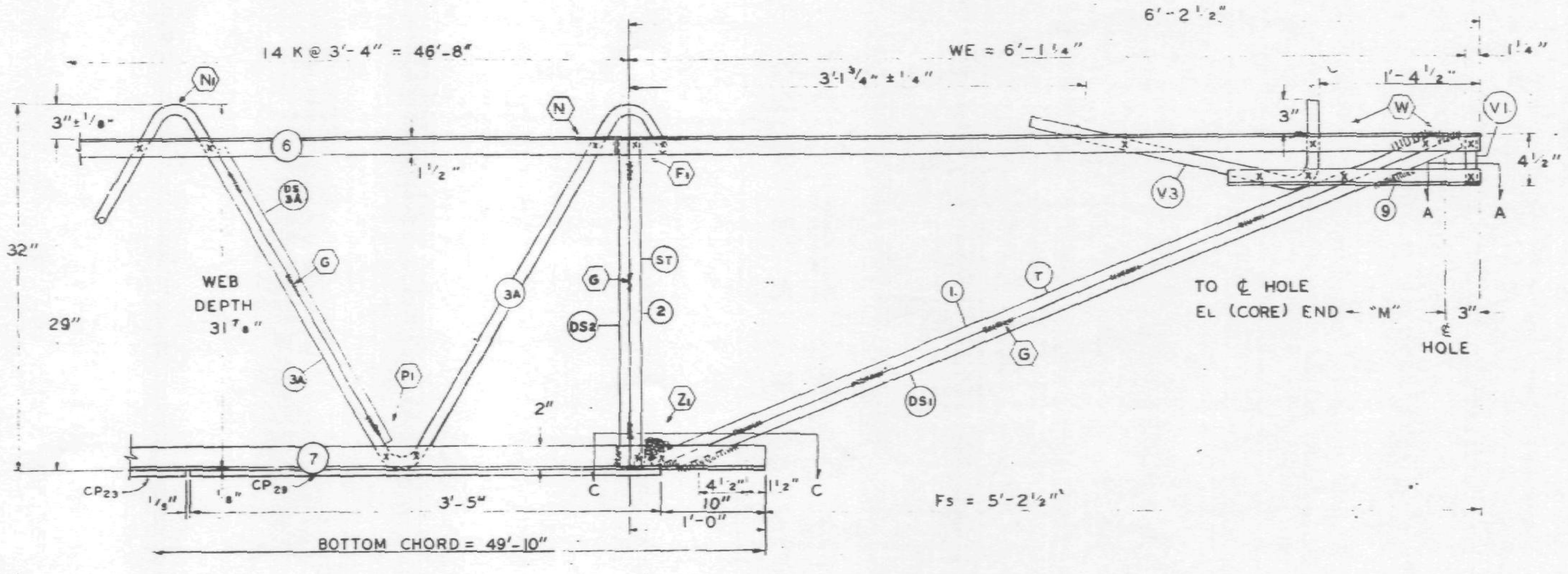

ES END (COLUMN)

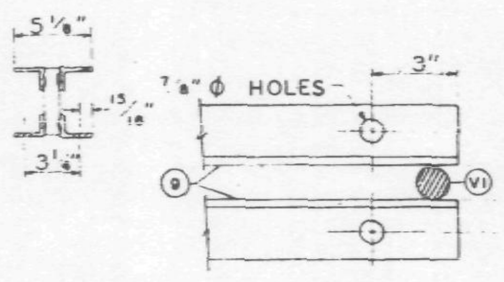

SECTION A-A

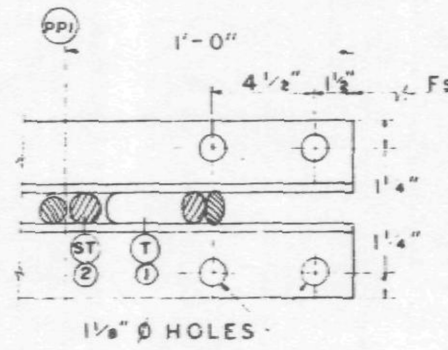

SECTION C-C

ALL PANEL POINTS RESISTANCE WELDED (X)
ARC WELDS INDICATED AT SHADED AREAS AND AT BOTTOM CHORD, WEB SPLICES
ALL WELD DETAILS SHOWN ON SHEETS ST290 - ST294 AND ST286.
SEE SHEET ST295 FOR V1, V2, V3, DETAILS
LETTERS IN HEXAGON INDICATE WELD DETAILS ie. (A)
LETTERS AND NUMBERS IN SQUARES INDICATE RESISTANCE WELD STRENGTH IDENTIFIED IN THE QUALITY CONTROL PROGRAM ie. [R1]

DAMPING UNIT CONNECTION PLATE ATTACHED TO BOTTOM CHORD (COL. END) IN FIELD. ASSEMBLY BY OTHERS.

FABRICATION REQUIRMENTS		
	DESIGN	TOLERANCE
CAMBER AT MIDSPAN	2 1/4"	± 3/8"
DESIGN DEPTH	29"	± 1/4"
PANEL "K"	3'-4"	± 1/4"
OVERALL LENGTH	57'-7"	± 3/8"
WEB DEPTH	31 7/8"	± 1/4"

SKILLING - HELLE - CHRISTIANSEN - ROBERTSON
Structural & Civil Engineers
APPROVED
APPROVED AS NOTED
6/9/69 SK

VOID

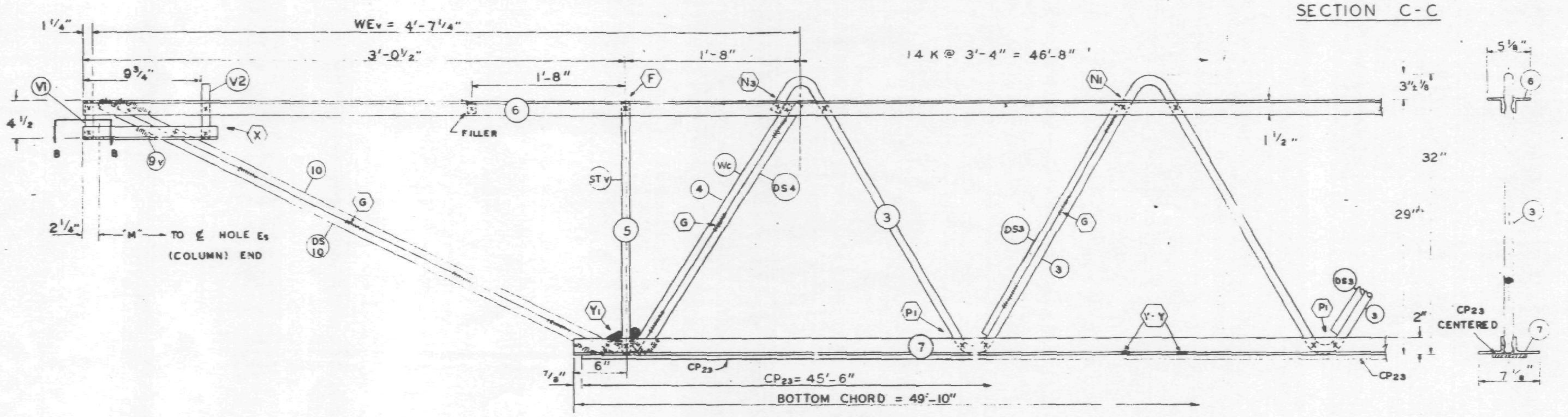

EL END (CORE)

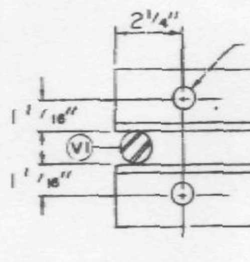

SECTION B-B

NO.	DATE	REVISION	BY

REF DRWG.

7-AB1-32	1-6-69
7-AB4-50	8-1-68
7-AB3-41	1-6-69
7-AB1-53	7-22-68

Truss length not reqd

PAINT
LACLEDE ELECTROCOAT
RED NO. 10001

TRUSS DESIGNATION	TOP CHORD TWO ANGLES				BOTTOM CHORD TWO ANGLES				MAIN WEB "W"					FILLER		"M" C/C HOLES	CONNECTION FILLERS			CHORD PLATE				DOUBLE STRUT				CHORD PLATE			
	MK	TYPE STEEL	CHORD SIZE	LENGTH	MK	TYPE STEEL	CHORD SIZE	LENGTH	MK	TYPE STEEL	DIA.	LENGTH	NO. OF K	NO.	DIA.		NO	DIA.	LENGTH	MK	TYPE STEEL	SIZE	LENGTH	MK	TYPE STEEL	DIA	LENGTH	MK	TYPE STEEL	SIZE	LENGTH
C32T36P 577	6	A242	2"x1 1/2"x 31"	57'-7"	7	A36	3"x 2"x 37	49'-10"	3 / 3A	A242 / A242	1.14 / 1.14	53'-4 3/4" / 34'-8 1/2	8 1/2 K @ 3'-4" = 28'-4" / 5 1/2 K @ 3'-4" = 18'-4"	11	1.14	57'-1 3/4"	—	—	—	CP 23	A36	4 1/2"x.39	45'-6"	DS2	A242	.75	2'-4 7/8"	CP 29	A36	4 1/2"x .39"	3'-5"

COLL'N END

ES END	TRUSS DESIGNATION	BEARING ANGLES				WE	DIAGONAL "T" STRUT				VERTICAL "ST" STRUT				END STIFFENER MK. V1			END STIFFENER MK. V3			DOUBLE STRUT			
		MK	TYPE STEEL	CHORD SIZE	LENGTH		MK	TYPE STEEL	DIA	LENGTH	MK	TYPE STEEL	DIA.	LENGTH	TYPE STEEL	DIA.	LENGTH	TYPE STEEL	DIA.	LENGTH	MK	TYPE STEEL	DIA	LGTH.
	C32T36P-577	9	A242	2"x1 1/2"x.37	2'-3"	6'-1 1/4"	1	A242	1.14	6'-3 1/8"	2	A242	1.14	2'-4 7/8"	A242	1.14	4 3/8"	A242	1.14	2'-9 1/2"	DS1	A242	.92	6'-3 1/8"

CHECK DIMENSION FOR TRUSS FAB. LOCATION OF TRANS. TRUSS				
CL-1	CL-2	CL-3	CL-4	FS
9'-6 1/2"	22'-10 1/2"	36'-2 1/2"	49'-6 1/2"	5'-2 1/2"

DOUBLE STRUT			
MK	TYPE STEEL	DIA	LENGTH
DS 3A	A242	.75	2'-6 3/4"

CORE END

EL END	TRUSS DESIGNATION	BEARING ANGLES				WEv	DIAGONAL "Tv" STRUT				VERTICAL "STv" STRUT				END STIFFENER MK. V1			END STIFFENER MK. V2			END STIFFENER MK. V4			WEB "Wc"					DOUBLE STRUT				DOUBLE STRUT				(2) DOUBLE STRUT (REQD)			
		MK	TYPE STEEL	CHORD SIZE	LENGTH		MK	TYPE STEEL	DIA	LENGTH	MK	TYPE STEEL	DIA.	LENGTH	TYPE STEEL	DIA.	LENGTH	TYPE STEEL	DIA.	LENGTH	TYPE STEEL	DIA.	LENGTH	MK	TYPE STEEL	PCS	DIA	LENGTH	MK	TYPE STEEL	DIA	LENGTH	MK	TYPE STEEL	DIA	LENGTH	MK	TYPE STEEL	DIA	LENGTH
	C32T36P-577	9	A242	2"x1 1/2"x .37	11 3/4"	4'-7 1/4"	10	A242	1.14	3'-7"	5	A242	1.14	2'-4 7/8"	A242	1.14	4 3/8"	A242	1.14	7 3/8"				4	A242	1	1.14	2'- [illegible]	DS4	A242	.92	2'-9 1/2"	DS10	A242	.75	3'-7"	DS3	A242	.92	2'-6 3/4"

STEEL TRUSS DETAILS
FOR
WORLD TRADE CENTER - N.Y.C.
FOR
THE PORT OF NEW YORK AUTHORITY

FLOOR TRUSS C32T36P 57'-7" OVERALL
WORLD TRADE CENTER TOWERS A & B

FABRICATION BY: LACLEDE STEEL COMPANY

FABRICATED AT: MADISON, ILLINOIS	DESIGN DRAWING NO. 7-AB1-32 PLATE
APPROVED FOR FABRICATION BY: ______ FOR P.O.N.Y.A. DATE ____	DRAWN BY: [illegible] DATE: MAY 6, 1969
APPROVED FOR FABRICATION BY: ______ FOR FABRICATOR DATE ____	CHECKED BY: [illegible] IN CHARGE OF PROD. DEV. DATE: MAY 6, 1969
DETAILED BY: [illegible] STEEL CO.	FABRICATION CONT. NO. W.T.C. 221 SHEET NO. ST236P

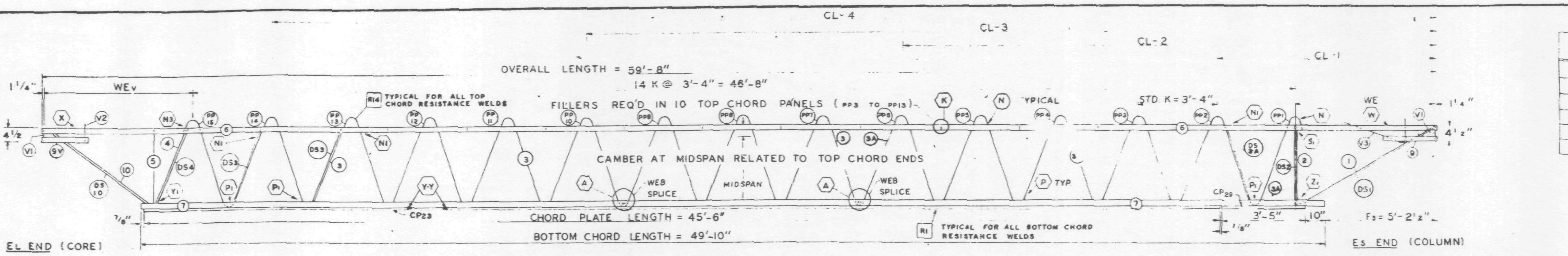

TRUSS ELEVATION

FABRICATION REQUIRMENTS	DESIGN	TOLERANCE
CAMBER AT MIDSPAN	2 1/4"	± 3/8"
DESIGN DEPTH	29"	± 1/4"
PANEL "K"	3'-4"	± 1/4"
OVERALL LENGTH	59'-8"	± 3/8"
WEB DEPTH	31 7/8"	± 1/4"

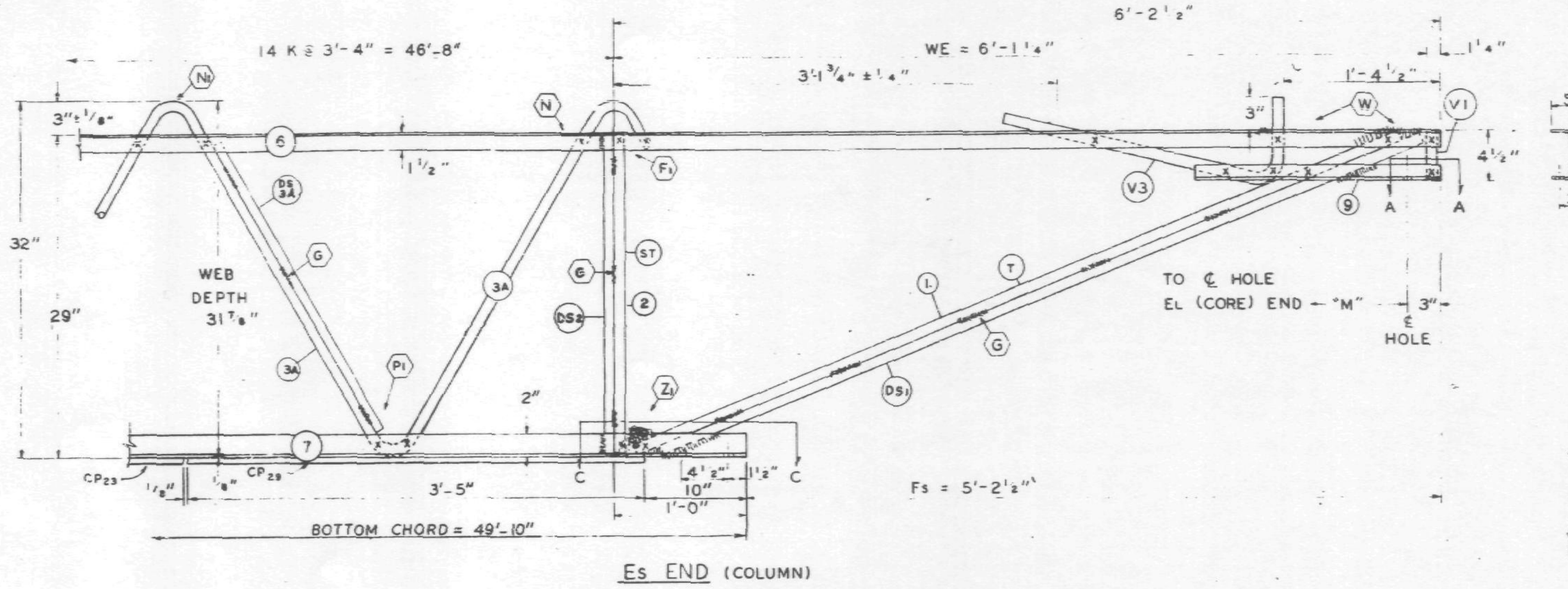

ES END (COLUMN)

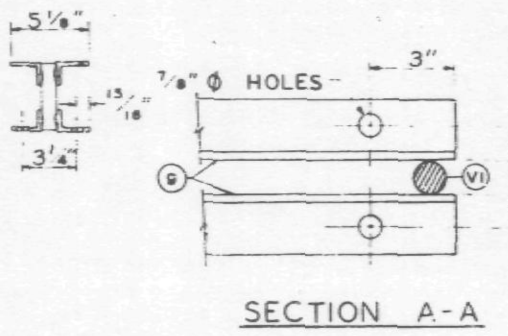

SECTION A-A

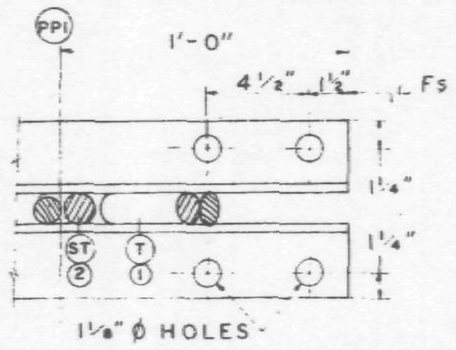

SECTION C-C

ALL PANEL POINTS RESISTANCE WELDED (X)
ARC WELDS INDICATED AT SHADED AREAS AND AT BOTTOM CHORD WEB SPLICES
ALL WELD DETAILS SHOWN ON SHEETS ST290 - ST294 AND ST286.
SEE SHEET ST295 FOR V1, V2, V3, DETAILS
LETTERS IN HEXAGON INDICATE WELD DETAILS i.e. (A)
LETTERS AND NUMBERS IN SQUARES INDICATE RESISTANCE WELD STRENGTH IDENTIFIED IN THE QUALITY CONTROL PROGRAM i.e. [R1]

DAMPING UNIT CONNECTION PLATE ATTACHED TO BOTTOM CHORD (COL. END) IN FIELD. ASSEMBLY BY OTHERS.

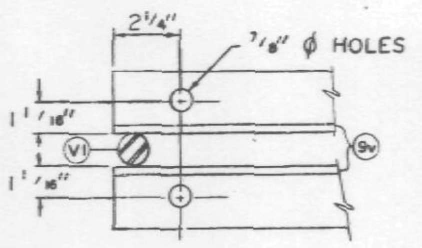

SECTION B-B

VOID

Truss length not req'd

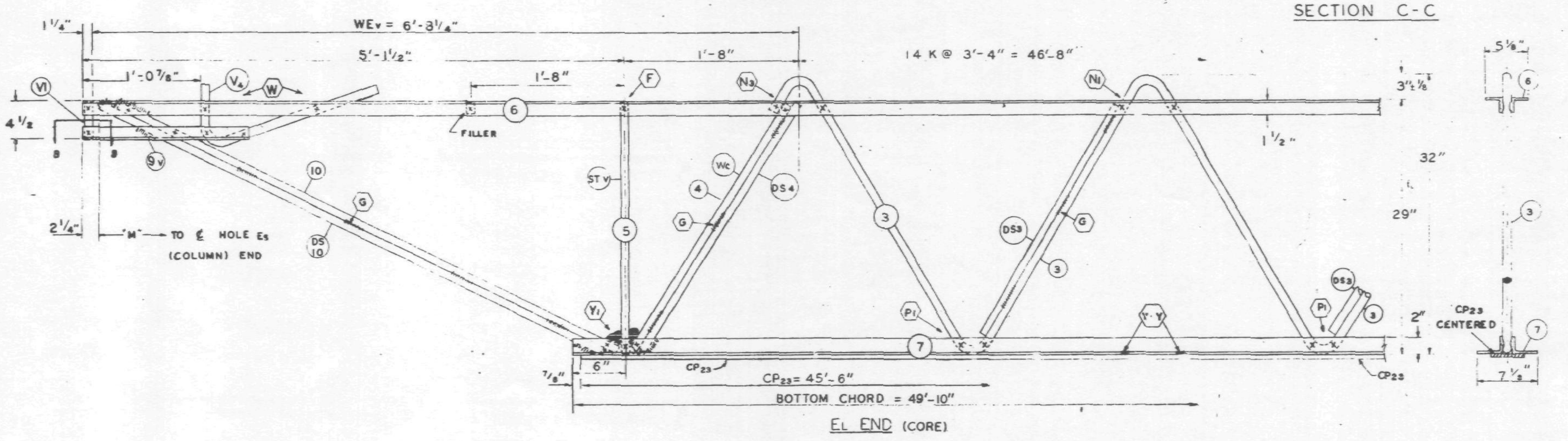

EL END (CORE)

NO.	DATE	REVISION	BY

REF DRWG.

7-AB1-32	1-6-69
7-AB4-30	5-1-68
7-AB3-41	1-6-69
7-AB1-53	7-22-68

PAINT
LACLEDE ELECTROCOAT
RED NO. 10001

TRUSS DESIGNATION	TOP CHORD TWO ANGLES				BOTTOM CHORD TWO ANGLES				MAIN WEB "W"					FILLER		"M" C/C HOLES	CONNECTION FILLERS			CHORD PLATE				DOUBLE STRUT				CHORD PLATE			
	MK.	TYPE STEEL	CHORD SIZE	LENGTH	MK.	TYPE STEEL	CHORD SIZE	LENGTH	MK.	TYPE STEEL	DIA.	LENGTH	NO. OF K	NO.	DIA.		NO	DIA.	LENGTH	MK	TYPE STEEL	SIZE	LENGTH	MK	TYPE STEEL	DIA	LENGTH	MK.	TYPE STEEL	SIZE	LENGTH
C32T36C 598	6	A242	2"x1½"x.31"	59'-8"	7	A36	3"x2"x.37	49'-10"	3 / 3A	A242 / A242	1.14 / 1.14	53'-4 3/4" / 34'-8 1/2	8 1/2 K @ 3'-4" = 28'-4" / 5 1/2 K @ 3'-4" = 18'-4"	11	1.14	59'-2¾"	—	—	—	CP 23	A36	4½"x.39	45'-6"	DS2	A242	.75	2'-¼"	CP 29	A36	4½"x.39"	3'-5"

COLUMN END

ES END TRUSS DESIGNATION	BEARING ANGLES				WE	DIAGONAL "T" STRUT				VERTICAL "ST" STRUT				END STIFFENER MK. V1			END STIFFENER MK. V3			DOUBLE STRUT			
	MK.	TYPE STEEL	CHORD SIZE	LENGTH		MK	TYPE STEEL	DIA	LENGTH	MK.	TYPE STEEL	DIA.	LENGTH	TYPE STEEL	DIA.	LENGTH	TYPE STEEL	DIA.	LENGTH	MK	TYPE STEEL	DIA	LGTH.
C32T36C 598	9	A242	2"x1½"x.37	2'-3"	6'-1¼"	1	A242	1.14	6'-3⅛"	2	A242	1.14	2'-4⅞"	A242	1.14	4⅜"	A242	1.14	2'-9½"	DS 1	A242	.92	6'-3⅛"

CHECK DIMENSION FOR TRUSS FAB. LOCATION OF TRANS. TRUSS				
CL-1	CL-2	CL-3	CL-4	FS
9'-6½"	22'-10½"	36'-2½"	49'-6½"	5'-2½"

DOUBLE STRUT			
MK	TYPE STEEL	DIA	LENGTH
DS 3A	A242	.75	2'-6¾"

CORE END

EL END TRUSS DESIGNATION	BEARING ANGLES				WEV	DIAGONAL "TV" STRUT				VERTICAL "STV" STRUT				END STIFFENER MK. V1			END STIFFENER MK. V2			END STIFFENER MK. V4			WEB "WC"					DOUBLE STRUT				DOUBLE STRUT				(2) DOUB (REQD) S..			
	MK.	TYPE STEEL	CHORD SIZE	LENGTH		MK	TYPE STEEL	DIA	LENGTH	MK.	TYPE STEEL	DIA.	LENGTH	TYPE STEEL	DIA.	LENGTH	TYPE STEEL	DIA.	LENGTH	TYPE STEEL	DIA.	LENGTH	MK	TYPE STEEL	PCS	DIA	LENGTH	TYPE STEEL	DIA	LENGTH	MK	TYPE STEEL	DIA	LENGTH	MK	TYPE STEEL	DI	LENGTH
C32T36C 598	9	A242	2"x1½"x.37	1'-6"	6'-8¼"	10	A242	1.14	5'-4½"	5	A242	1.14	2'-4⅞"	A242	1.14	4⅜"	—	—	—	A242	1.14	2'-2½"	4	A242	1	1.14	2'-9"	A242	.92	2'-9½"	DS 10	A242	.75	5'-4¼"	DS 3	A242	.92	2'-6¾"

STEEL TRUSS DETAILS
FOR
WORLD TRADE CENTER - N.Y.C.
FOR
THE PORT OF NEW YORK AUTHORITY

FLOOR TRUSS C32T36C 59'-8" OVERALL
WORLD TRADE CENTER TOWERS A&B

FABRICATION BY: LACLEDE STEEL COMPANY

FABRICATED AT: MADISON, ILLINOIS	DESIGN DRAWING NO. 7-AB1-32 PLATE
APPROVED FOR FABRICATION BY: ______ FOR P.O.N.Y.A. DATE	DRAWN BY: [illegible] DATE: MAY 6, 1969
APPROVED FOR FABRICATION BY: ______ FOR FABRICATOR DATE. LACLEDE STEEL CO.	CHECKED BY: T.M.C[illegible] IN CHARGE OF PROD. DEV. DATE: MAY 6, 1969
DETAILED BY: A.C. WEBER	FABRICATION CONT. NO. W.T.C. 221 — SHEET NO. ST236C

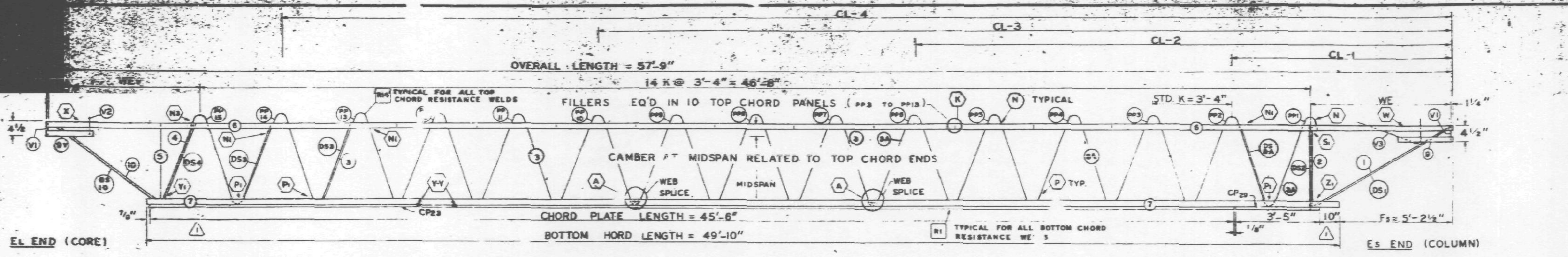

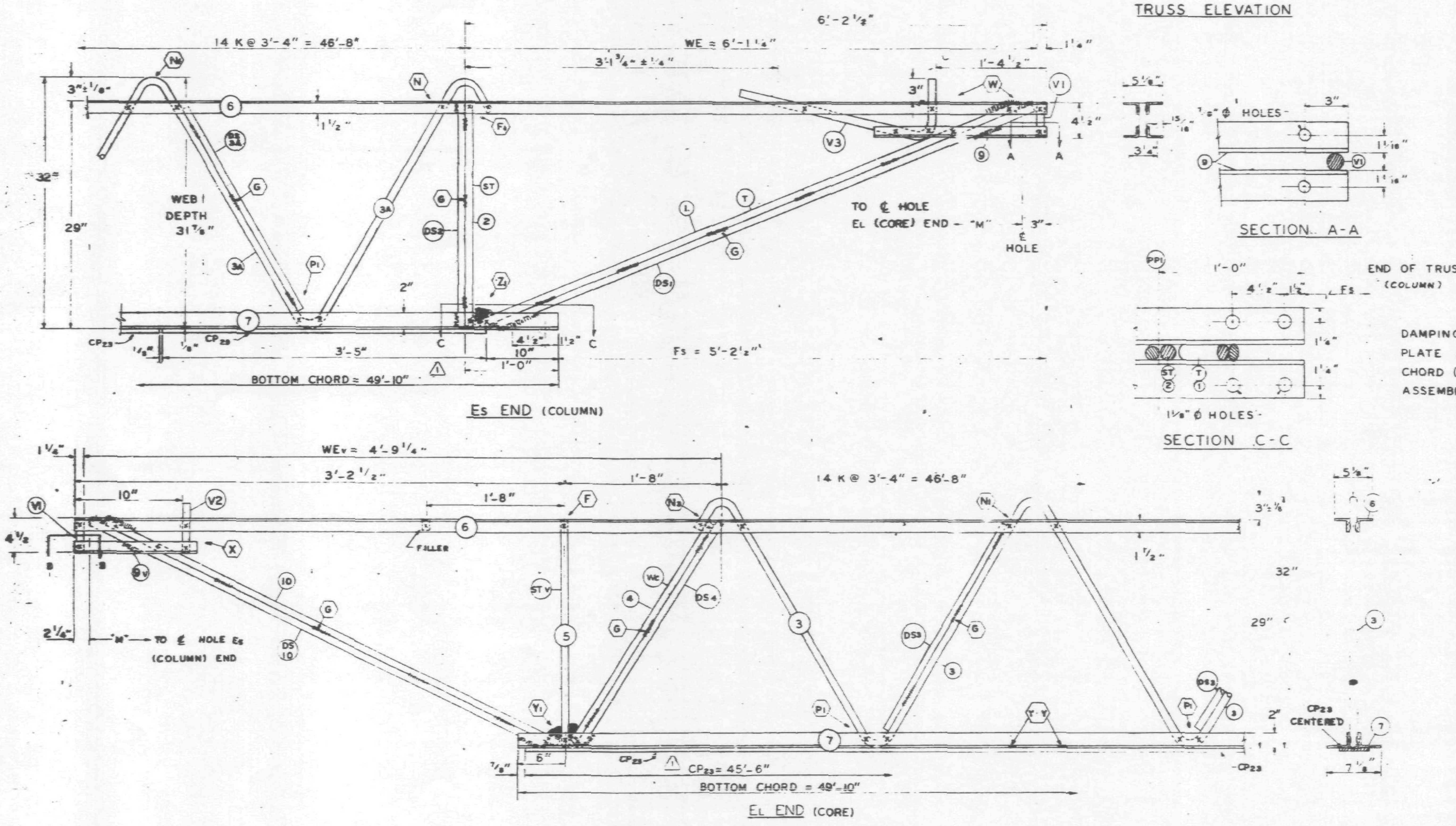

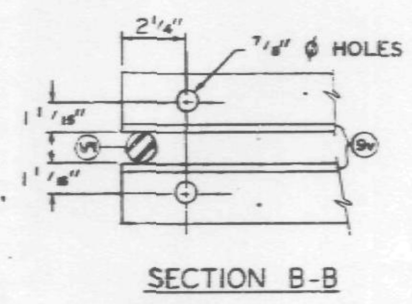

FABRICATION REQUIREMENTS	DESIGN	TOLERANCE
CAMBER AT MIDSPAN	2 1/4"	3/8"
DESIGN DEPTH	29"	1/4"
PANEL "K"	3'-4"	± 1/4"
OVERALL LENGTH	57'-9"	± 3/[illegible]"
WEB DEPTH	31 7/8"	± [illegible]

ALL PANEL POINTS RESISTANCE WELDED (X)
ARC WELDS INDICATED AT SHADED AREAS AND AT BOTTOM CHORD WEB SPLICES
ALL WELD DETAILS SHOWN ON SHEETS ST290 – ST294 AND ST286. ⚠1
SEE SHEET ST295 FOR V1, V2, V3, DETAILS
LETTERS IN HEXAGON INDICATE WELD DETAILS ie. (A)
LETTERS AND NUMBERS IN SQUARES INDICATE RESISTANCE WELD STRENGTH IDENTIFIED IN THE QUALITY CONTROL PROGRAM ie. [R1]

NO.	DATE	REVISION	BY
1	2-18-69	AS NOTED	T.M.C.

REF DRWG.

7-AB1-32	1-6-69
7-AB4-50.	8-1-68
7-AB3-41	1-6-69
7-AB1-53	7-22-68

PAINT
LACLEDE ELECTROCOAT
RED NO. 10001

TRUSS DESIGNATION	TOP CHORD TWO ANGLES				BOTTOM CHORD TWO ANGLES				MAIN WEB "W"					FILLER		"M" C/C HOLES	CONNECTION FILLERS			CHORD PLATE				DOUBLE STRUT				CHORD PLATE ⚠1			
	MK.	TYPE STEEL	CHORD SIZE	LENGTH	MK.	TYPE STEEL	CHORD SIZE	LENGTH	MK.	TYPE STEEL	DIA.	LENGTH	NO. OF K	NO.	DIA.		NO	DIA.	LENGTH	MK	TYPE STEEL	SIZE	LENGTH	MK	TYPE STEEL	DIA	LENGTH	MK.	TYPE STEEL	SIZE	LENGTH
C32T36N-579	6	A242	2"x1 1/2"x.31"	57'-9"	7	A36	3"x2"x.37	49'-10"	3 / 3A	A242 / A242	1.14 / 1.14	53'-4 3/4" / 34'-8 1/2	8 1/2 K @ 3'-4" = 28'-4" / 5 1/2 K @ 3'-4" = 18'-4"	11	1.14	57'-3 3/4"	–	–	—	CP 23	A36	4 1/2"x.39	45'-6"	DS2	A242	.75	2'-4 7/8"	CP 29	A36	4 1/2"x.39"	3'-5"

COLUMN END

Es END	TRUSS DESIGNATION	BEARING ANGLES				WE	DIAGONAL "T" STRUT				VERTICAL "ST" STRUT				END STIFFENER MK. V1			END STIFFENER MK. V3			DOUBLE STRUT			
		MK.	TYPE STEEL	CHORD SIZE	LENGTH		MK	TYPE STEEL	DIA	LENGTH	MK.	TYPE STEEL	DIA.	LENGTH	TYPE STEEL	DIA.	LENGTH	TYPE STEEL	DIA.	LENGTH	MK	TYPE STEEL	DIA	LGTH.
	C32T36N-579	9	A242	2"x1 1/2"x.37" ⚠1	2'-3"	6'-1 1/4"	1	A242	1.14	6'-3 1/8"	2	A242	1.14	2'-4 7/8"	A242	1.14	4 3/8"	A242	1.14	[illegible]	DS 1	A242	.92	6'-3 1/8"

CHECK DIMENSION FOR TRUSS FAB. LOCATION OF TRANS TRUSS				
CL-1	CL-2	CL-3	CL-4	Fs
9'-6 1/2"	22'-10 1/2"	36'-2 1/2"	49'-6 1/2"	5'-2 1/2"

DOUBLE STRUT			
MK	TYPE STEEL	DIA	LENGTH
DS 3A	A242	.75	2'-6 3/4"

CORE END

EL END	TRUSS DESIGNATION	BEARING ANGLES				WEv	DIAGONAL "Tv" STRUT ⚠1				VERTICAL "STv" STRUT				END STIFFENER MK. V1			END STIFFENER MK. V2			END STIFFENER MK. V4			WEB "Wc"					DOUBLE STRUT				DOUBLE STRUT ⚠1				(2) DOUBLE (PEOD) STRUT			
		MK.	TYPE STEEL	CHORD SIZE	LENGTH		MK.	TYPE STEEL	DIA	LENGTH	MK.	TYPE STEEL	DIA.	LENGTH	TYPE STEEL	DIA.	LENGTH	TYPE STEEL	DIA.	LENGTH	TYPE STEEL	DIA.	LENGTH	MK	TYPE STEEL	PCS	DIA	LENGTH	MK.	TYPE STEEL	DIA	LENGTH	MK	TYPE STEEL	DIA	LENGTH	MK	TYPE STEEL	DIA	LENGTH
	C32T36N-579	9	A242	2"x1 1/2"x.37 ⚠1	1'-0"	4'-9 1/4"	10	A242	1.14	3'-8 1/4"	5	A242	1.14	2'-4 7/8"	A242	1.14	4 3/8"	A242	1.14	7 3/8"				4	A242	1	1.14	2'-9 1/2"	DS 4	A242	.92	2'-9 1/2"	DS 10	A242	.75	3'-8 1/4"	DS 3	A242	.92	2'-8 3/4"

STEEL TRUSS DETAILS
FOR
WORLD TRADE CENTER - N.Y.C.
FOR
THE PORT OF NEW YORK AUTHORITY

FLOOR TRUSS C32T36N 57'-9" OVERALL
WORLD TRADE CENTER TOWERS A & B

FABRICATION BY: LACLEDE STEEL COMPANY

FABRICATED AT: MADISON, ILLINOIS		DESIGN DRAWING NO. 7-AB1-32	PLATE
APPROVED FOR FABRICATION BY: James White FOR P.O.N.Y.A.	DATE 2/24/69	DRAWN BY: [illegible] DATE: JAN 20 1969	
APPROVED FOR FABRICATION BY: ________ FOR FABRICATOR	DATE.	CHECKED BY: T.M.CHIRA DATE: JAN 21 1969	IN CHARGE OF PROD. DCV.
LACLEDE STEEL CO. DETAILED BY: A.C. WEBER		FABRICATION CONT. NO. W.T.C. 221	SHEET NO. ST236N

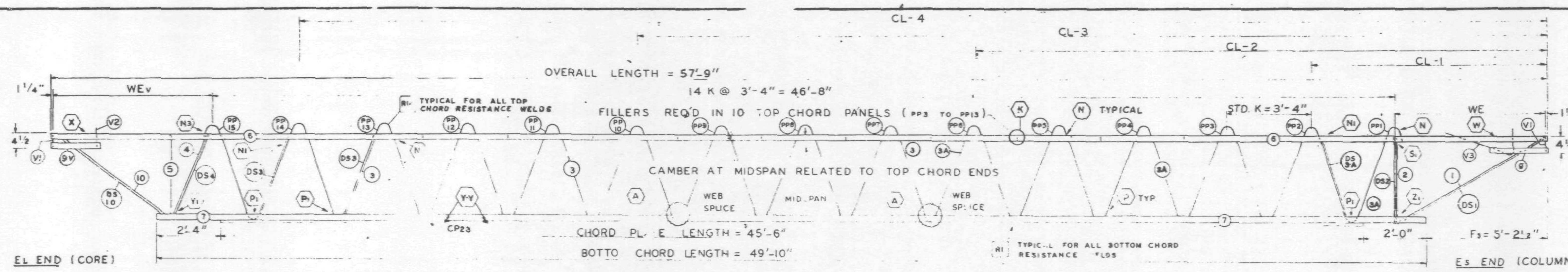

TRUSS ELEVATION

FABRICATION REQUIRMENTS		
	DESIGN	TOLERANCE
CAMBER AT MIDSPAN	2 1/4"	± 3/8"
DESIGN DEPTH	29"	± 1/4"
PANEL "K"	3'-4'	± 1/4"
OVERALL LENGTH	57	± 3/8"
WEB DEPTH	8"	± 1/

ALL PANEL POINTS RESISTANCE WELDED (X)
ARC WELDS INDICATED AT SHADED AREAS AND AT BOTTOM CHORD WEB SPLICES
ALL WELD DETAILS SHOWN ON SHEETS ST290 – ST294 AND ST287
SEE SHEET ST295 FOR V1, V2, V3, DETAILS
LETTERS IN HEXAGON INDICATE WELD DETAILS ie. ⟨A⟩
LETTERS AND NUMBERS IN SQUARES INDICATE RESISTANCE WELD STRENGTH IDENTIFIED IN THE QUALITY CONTROL PROGRAM, ie., [R1]

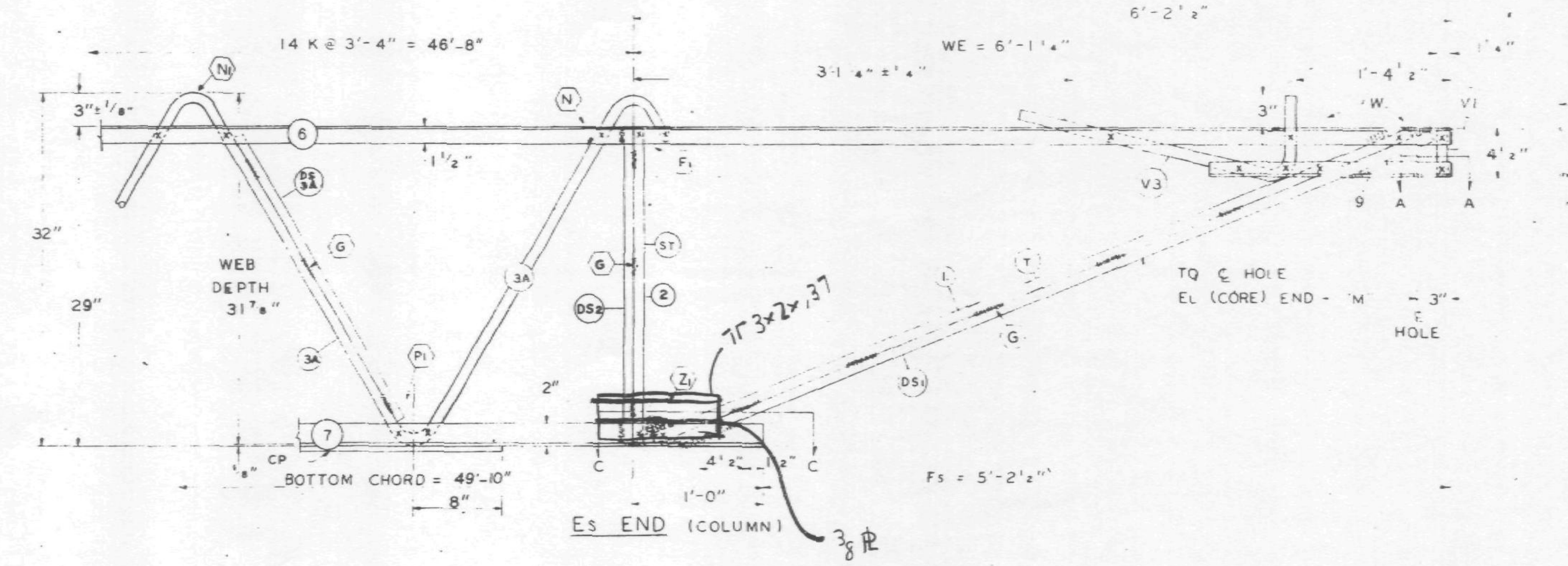

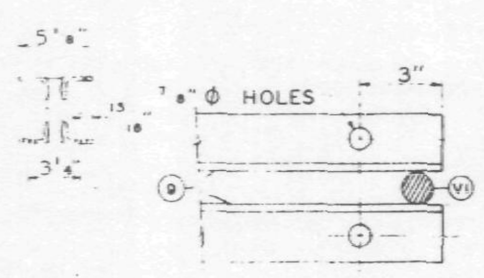

SECTION A-A

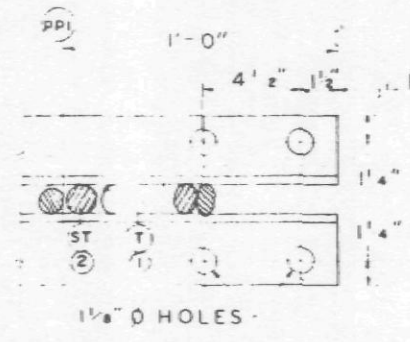

DAMPING UNIT CONNECTION PLATE ATTACHED TO BOTTOM CHORD (COL END) IN FIELD. ASSEMBLY BY OTHERS

SECTION C-C

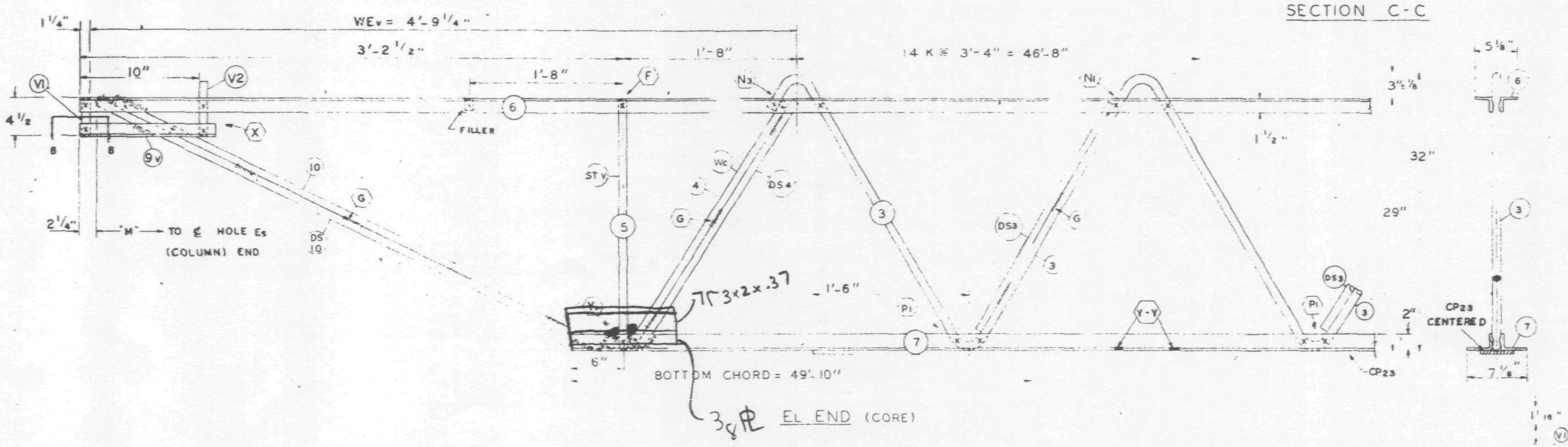

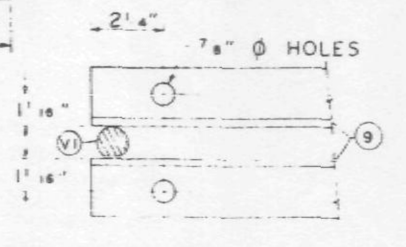

SECTION B-B

REF DRWG.

7-AB1-32	1-6-69
7-AB4-50	8-1-68
7-AB3-41	1-6-69
7-AB1-53	7-22-68

X
2/19/69 SK

PAINT
LACLEDE ELECTROCOAT
RED NO. 10001

TRUSS DESIGNATION	TOP CHORD TWO ANGLES				BOTTOM CHORD TWO ANGLES				MAIN WEB "W"					FILLER		"M" C-C HOLES	CONNECTION FILLERS			CHORD PLATE				DOUBLE STRUT			
	MK	TYPE STEEL	CHORD SIZE	LENGTH	MK	TYPE STEEL	CHORD SIZE	LENGTH	MK	TYPE STEEL	DIA	LENGTH	NO. OF K	NO	DIA		NO	DIA	LENGTH	MK	TYPE STEEL	SIZE	LENGTH	MK	TYPE STEEL	DIA	LENGTH
C32T36N-579	6	A242	2"x1 1/2"x.31	57'-9"	7	A36	3"x2"x.37	49'-10"	3 / 3A	A242 / A242	1.14 / 1.14	53'-4 3/4" / 34'-8 1/2	8 1/2 K@3'-4"=28'-4" / 5 1/2 K@3'-4"=18'-4"	11	1.14	57'-3 3/4"	–	–	—	CP 23	A36	4 1/2"x.39	45'-6"	DS2	A242	.75	2'-4 7/8"

COLUMN END	Es END	TRUSS DESIGNATION	BEARING ANGLES				WE	DIAGONAL "T" STRUT				VERTICAL "ST" STRUT				END STIFFENER MK V1			END STIFFENER MK V3			DOUBLE STRUT			
			MK	TYPE STEEL	CHORD SIZE	LENGTH		MK	TYPE STEEL	DIA	LENGTH	MK	TYPE STEEL	DIA	LENGTH	TYPE STEEL	DIA	LENGTH	TYPE STEEL	DIA	LENGTH	MK	TYPE STEEL	DIA	LGTH
		C32T36N-579	9	A242	2"x1 1/2"x.25 (.37)	2'-3"	6'-1 1/4"	1	A242	1.14	6'-3 1/8"	2	A242	1.14	2'-4 7/8"	A242	1.14	4 3/8	[illegible]	1.14	2'-9 1/2"	DS1	A242	.92	6'-3 1/8"

CHECK DIMENSION FOR TRUSS FAB. LOCATION OF TRANS. TRUSS				
CL-1	CL-2	CL-3	CL-4	Fs
9'-6 1/2"	22'-10 1/2"	36'-2 1/2"	49'-6 1/2"	5'-2 1/2"

DOUBLE STRUT			
MK.	TYPE STEEL	DIA	LENGTH
DS 3A	A242	.75	2'-6 3/4"

CORE END	EL END	TRUSS DESIGNATION	BEARING ANGLES				WEv	DIAGONAL "Tv" STRUT				VERTICAL "STv" STRUT				E STIFFENER MK V1			E STIFFENER MK V2			E STIFFENER MK V4			WEB "Wc"					DOUBLE STRUT				DOUBLE STRUT				(2) DOUBLE (PEOD) STRUT			
			MK	TYPE STEEL	CHORD SIZE	LENGTH		MK	TYPE STEEL	DIA	LENGTH	MK	TYPE STEEL	DIA	LENGTH	TYPE STEEL	DIA	LENGTH	TYPE STEEL	DIA	LENGTH	TYPE STEEL	DIA	LENGTH	MK	TYPE STEEL	PCS	DIA	LENGTH	MK	TYPE STEEL	DIA	LENGTH	MK	TYPE STEEL	DIA	LENGTH	MK	TYPE STEEL	DIA	LENGTH
		C32T36N-579	9	A242	2"x1 1/2"x.25 (.37)	1'-0"	4'-9 1/4"	10	A242	1.14	3'-7 3/8"	5	A242	1.14	2'-4 7/8"	A242	1.14	4 3/8	A242	1.14	7 3/8				4	A242	1	1.14	2'-9 1/2"	DS4	A242	.92	2'-9 1/2"	DS10	A242	.75	3'-7 3/8"	DS3	A242	.92	2'-6 3/4"

STEEL TRUSS DETAILS
FOR
WORLD TRADE CENTER - N Y C
FOR
THE PORT OF NEW YORK AUTHORITY

FLOOR TRUSS C32T36N 57'-9" OVERALL
WORLD TRADE CENTER TOWERS A & B

FABRICATION BY: LACLEDE STEEL COMPANY			
FABRICATED AT: MADISON, ILLINOIS		DESIGN DRAWING NO 7-AB1-32	PLATE
APPROVED FOR FABRICATION BY FOR P.O.N.Y.A.	DATE	DRAWN BY: [illegible] DATE: JAN. 20 1969	
APPROVED FOR FABRICATION BY A.C. WEBER FOR FABRICATOR	DATE	CHECKED BY T.M. CHURA DATE JAN 21 1969	IN CHARGE OF PROD. DEV.
DETAILED BY: A. C. WEBER		FABRICATION CONT NO W.T.C. 221	SHEET NO ST236N

FABRICATION REQUIRMENTS	DESIGN	TOLERANCE
CAMBER AT MIDSPAN	2 1/4"	± 3/8"
DESIGN DEPTH	29"	± 1/8"
PANEL "K"	3'-4"	± 1/8"
OVERALL LENGTH	59'-8"	± 3/8"
WEB DEPTH	31 7/8"	± 1/8"

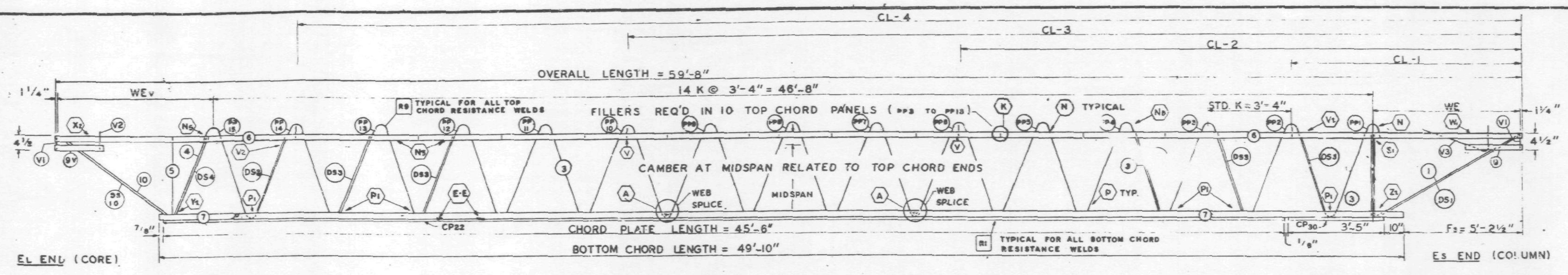

TRUSS ELEVATION

ALL PANEL POINTS RESISTANCE WELDED (X)
ARC WELDS INDICATED AT SHADED AREAS AND AT BOTTOM CHORD WEB SPLICES
ALL WELD DETAILS SHOWN ON SHEETS ST290 - ST294 AND ST286
SEE SHEET ST295 FOR V1, V2, V3, DETAILS
LETTERS IN HEXAGON INDICATE WELD DETAILS i.e. (A)
LETTERS AND NUMBERS IN SQUARES INDICATE RESISTANCE WELD STRENGTH IDENTIFIED IN THE QUALITY CONTROL PROGRAM i.e. [R1]

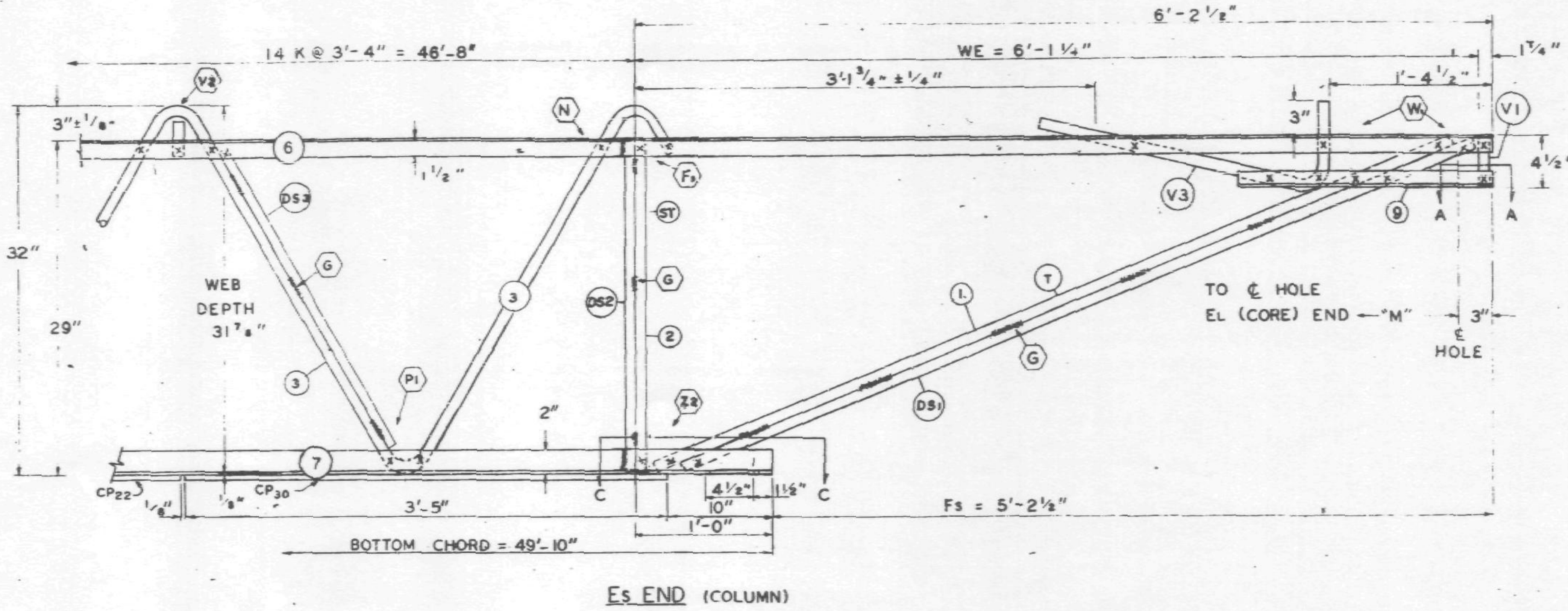

Es END (COLUMN)

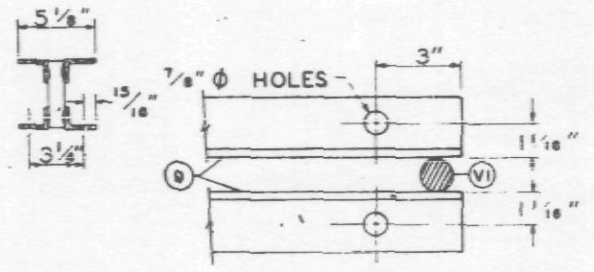

SECTION A-A

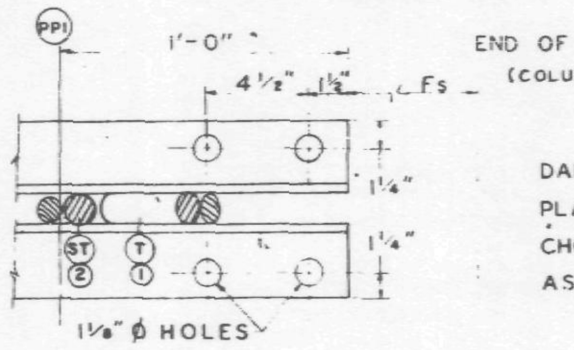

SECTION C-C

DAMPING UNIT CONNECTION PLATE ATTACHED TO BOTTOM CHORD (COL. END) IN FIELD. ASSEMBLY BY OTHERS.

VOID

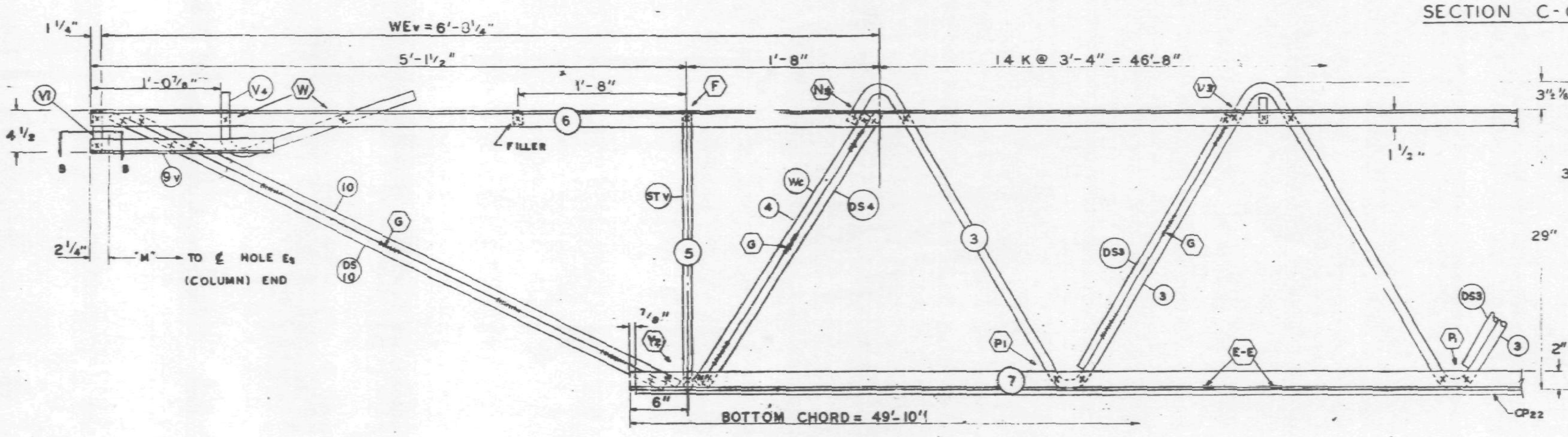

EL END (CORE)

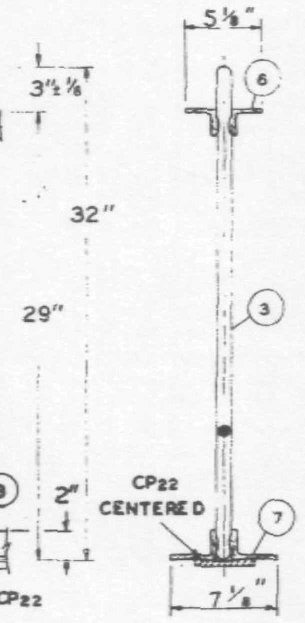

Truss length not reqd

NO.	DATE	REVISION	BY

REF DRWG.		
	7-AB1-33	1-6-69
	7-AB4-30	8-1-69
	7-AB3-41	1-8-69
	7-AB1-53	7-22-68

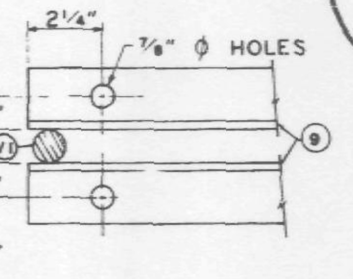

SECTION B-B

TRUSS DESIGNATION	TOP CHORD TWO ANGLES				BOTTOM CHORD TWO ANGLES				MAIN WEB "W"					FILLER		"M" C/C HOLES	CONNECTION FILLERS			CHORD PLATE				DOUBLE STRUT			
	MK	PL EEL	CHORD SIZE	LENGTH	MK	TYPE STEEL	CHORD SIZE	LENGTH	MK	TYPE STEEL	DIA.	LENGTH	NO. OF K	NO.	DIA.		NO	DIA.	LENGTH	MK	TYPE STEEL	SIZE	LENGTH	MK	TYPE STEEL	DIA	LENGTH
C32T37C-598	6	A242	2"x1½"x37	59'-8"	7	A36	3"x2"x37	49'-10"	3	A242	1.14	88'-1¼"	14 @ 3'-4" = 46'-8"	11	1.14	59'-2¾"	4	1.14	3"	CP22	A36	6½"x.50	45'-6"	DS2	A242	.75	2'-4⅞"

COLUMN END

Es END	TRUSS DESIGNATION	BEARING ANGLES				WE	DIAGONAL "T" STRUT				VERTICAL "ST" STRUT				END STIFFENER MK. V1			END STIFFENER MK. V3			DOUBLE STRUT			
		MK.	TYPE STEEL	CHORD SIZE	LENGTH		MK	TYPE STEEL	DIA	LENGTH	MK	TYPE STEEL	DIA.	LENGTH	TYPE STEEL	DIA.	LENGTH	TYPE STEEL	DIA.	LENGTH	MK	TYPE STEEL	DIA	LGTH.
	C32 [illegible]C 598	9	A242	2"x1½"x.37	2'-3"	6'-1¼"	1	A242	1.14	6'-3⅛"	2	A242	1.14	2'-4⅜"	A242	1.14	4⅝"	A242	1.14	2'-9½"	[illegible]	A242	1.14	6'-3⅛"

CHECK DIMENSION FOR TRUSS FAB. LOCATION OF TRANS. TRUSS				
CL-1	CL-2	CL-3	CL-4	Fs
9'-6½"	22'-10½"	36'-2½"	49'-6½"	5'-2'

CHORD PLATE			
MK.	TYPE STEEL	SIZE	LENGTH
CP30	A36	6½"x.50"	3'-5"

CORE END

EL END	TRUSS DESIGNATION	BEARING ANGLES				WEv	DIAGONAL "TV" STRUT				VERTICAL "STv" STRUT				END STIFFENER MK. V1			END STIFFENER MK. V2			END STIFFENER MK. V4			WEB "Wc"					DOUBLE STRUT				DOUBLE STRUT				(8) DOUBLE (REQD) STRUT			
		MK.	TYPE STEEL	CHORD SIZE	LENGTH		MK	TYPE STEEL	DIA	LENGTH	MK	TYPE STEEL	DIA.	LENGTH	TYPE STEEL	DIA.	LENGTH	TYPE STEEL	DIA.	LENGTH	TYPE STEEL	DIA.	LENGTH	MK	TYPE STEEL	C/C'S	DIA	LENGTH	MK	TYPE STEEL	DIA	LENGTH	MK	TYPE STEEL	DIA	LENGTH	MK	TYPE STEEL	DIA	LENGTH
	C32T37C 598	9	A242	2"x1½"x.37	1'-6"	6'-8	10	A242	1.14	5'-4½	5	A242	1.14	[illegible]	[illegible]	[illegible]	[illegible]	—	—	—	A242	[illegible]	2'-2½"	4	A242	1	1.14	2'-9⅛"	DS	A242	1.14	2'-9⅛"	DS10	A242	1.14	5'-4¼"	DS3	A242	1.14	2'-6¾"

PAINT
LACLEDE ELECTROCOAT
RED NO. 10001

STEEL TRUSS DETAILS
FOR
WORLD TRADE CENTER - N.Y.C.
FOR
THE PORT OF NEW YORK AUTHORITY

FLOOR TRUSS C32T37C 59'-8" OVERALL
WORLD TRADE CENTER TOWERS A & B

FABRICATION BY: LACLEDE STEEL COMPANY
FABRICATED AT: MADISON, ILLINOIS
APPROVED FOR FABRICATION B: FOR P.O.N.Y.A. DATE
APPROVED FOR FABRICATION BY: DATE
DESIGN DRAWING NO. [illegible]
DRAWN BY [illegible] DATE MAY 6, 1969
CHECKED BY [illegible] DATE MAY 6, 1969
DETAILED BY: A. C. [illegible]

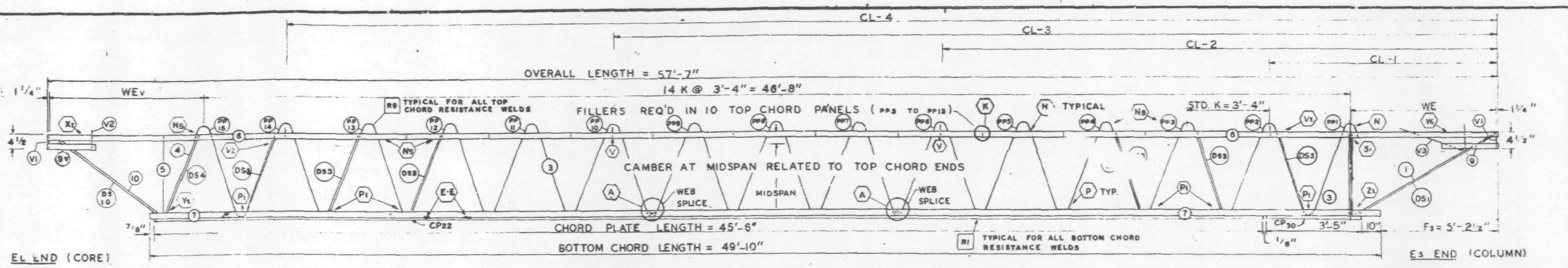

TRUSS ELEVATION

FABRICATION REQUIRMENTS	DESIGN	TOLERANCE
CAMBER AT MIDSPAN	± 1/4"	± 3/8"
DESIGN DEPTH	29"	± 1/4"
PANEL "K"	3'-4"	± 1/4"
OVERALL LENGTH	57'-7"	± 3/8"
WEB DEPTH	31 7/8"	± 1/4"

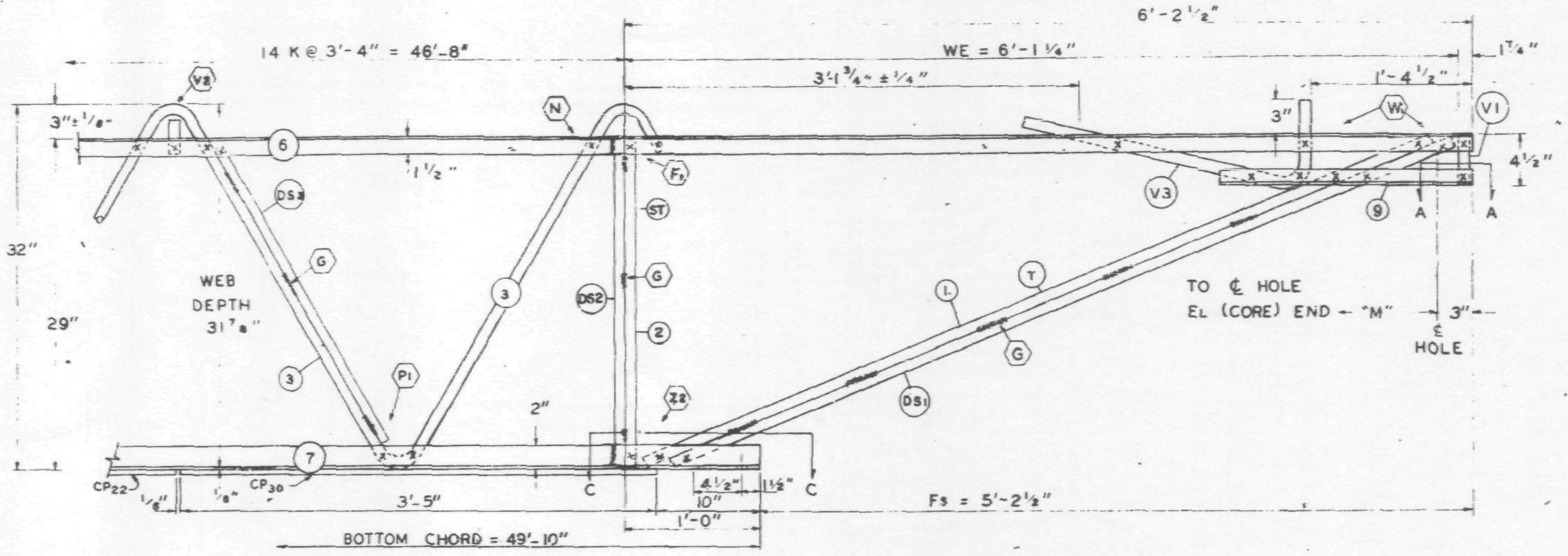

Es END (COLUMN)

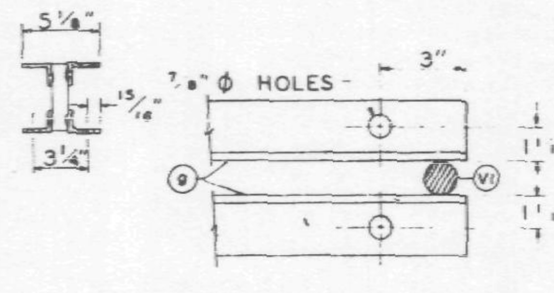

SECTION A-A

ALL PANEL POINTS RESISTANCE WELDED (X)
ARC WELDS INDICATED AT SHADED AREAS AND AT BOTTOM CHORD WEB SPLICES
ALL WELD DETAILS SHOWN ON SHEETS ST290 - ST294 AND ST285
SEE SHEET ST295 FOR V1, V2, V3, DETAILS
LETTERS IN HEXAGON INDICATE WELD DETAILS ie., (A)
LETTERS AND NUMBERS IN SQUARES INDICATE RESISTANCE WELD STRENGTH IDENTIFIED IN THE QUALITY CONTROL PROGRAM, ie., [R1]

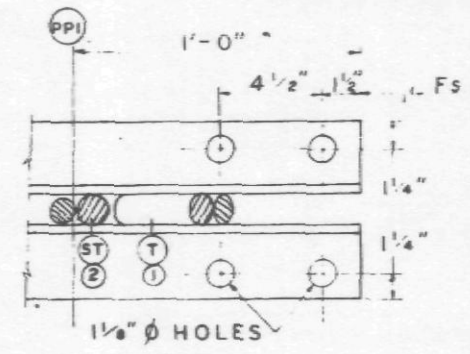

SECTION C-C

DAMPING UNIT CONNECTION PLATE ATTACHED TO BOTTOM CHORD (COL. END) IN FIELD. ASSEMBLY BY OTHERS.

SKILLING - HELLE - CHRISTIANSEN - ROBERTSON
Structural & Civil Engineers
APPROVED AS NOTED

VOID

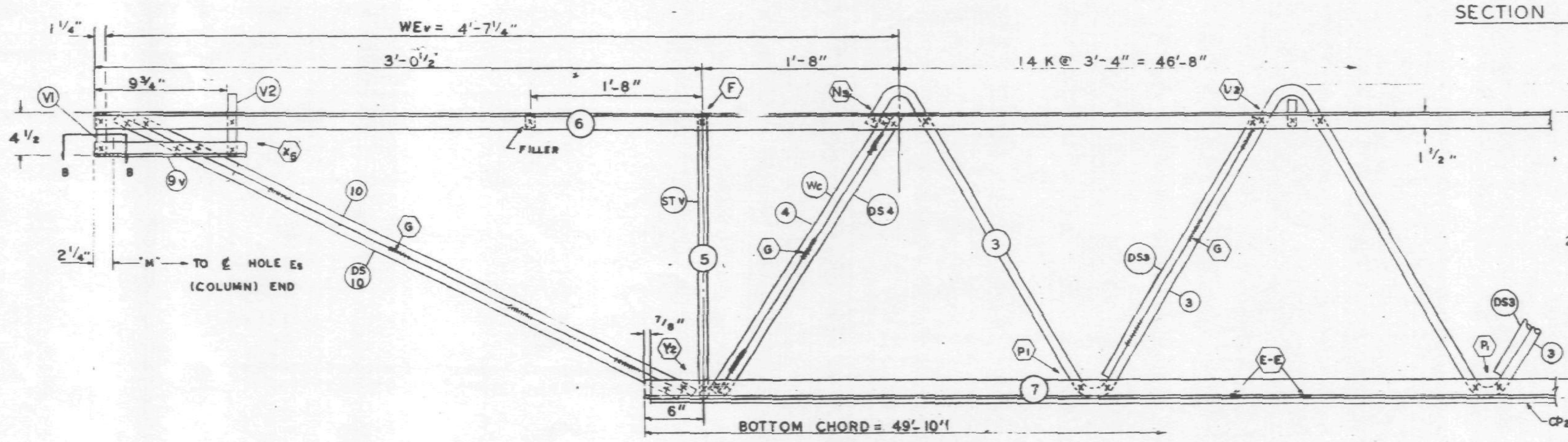

EL END (CORE)

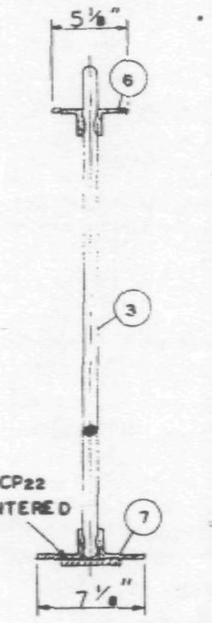

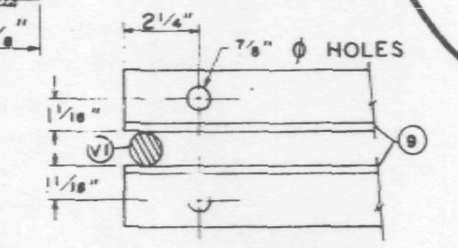

SECTION B-B

NO.	DATE	REVISION	BY

Truss length not reqd

REF DRWG.

7-AB1-32	1-8-69
7-AB4-50	8-1-68
7-AB3-41	1-8-69
7-AB1-53	7-22-68

PAINT
LACLEDE ELECTROCOAT
RED NO. 10001

TRUSS DESIGNATION	TOP CHORD TWO ANGLES MK.	TYPE STEEL	CHORD SIZE	LENGTH	BOTTOM CHORD TWO ANGLES MK.	TYPE STEEL	CHORD SIZE	LENGTH	MAIN WEB "W" MK.	TYPE STEEL	DIA.	LENGTH	NO. OF K	FILLER NO.	DIA.	"M" C/C HOLES	CONNECTION FILLERS NO	DIA.	LENGTH	CHORD PLATE MK	TYPE STEEL	SIZE	LENGTH	DOUBLE STRUT MK	TYPE STEEL	DIA	LENGTH
C32T37P 577	6	A242	2"x1½"x37"	57'-7"	7	A36	3"x2"x37	49'-10"	3	A242	1.14	88'-1¼"	14 @ 3'-4"= 46'-8"	11	1.14	57'-1¾"	4	1.14	3"	CP22	A36	6½"x.50	45'-6"	DS2	A242	.75	2'-4"

COLUMN END

Es END TRUSS DESIGNATION	BEARING ANGLES MK.	TYPE STEEL	CHORD SIZE	LENGTH	WE	DIAGONAL "T" STRUT MK	TYPE STEEL	DIA	LENGTH	VERTICAL "ST" STRUT MK.	TYPE STEEL	DIA.	LENGTH	END STIFFENER MK. V1 TYPE STEEL	DIA.	LENGTH	MK. V3 TYPE STEEL	DIA.	LENGTH	DOUBLE STRUT MK	TYPE STEEL	DIA	LGTH.
C32T37P 577	9	A242	2"x1½"x.37	2'-3"	6'-1¼"	1	A242	1.14	C'-3⅛"	2	A242	1.14	2'-4⅜"	A242	1.14	4⅜"	A242	1.14	2'-9½"	DS1	A242	1.14	6'-3⅛"

CHECK DIMENSION FOR TRUSS FAB.

LOCATION OF TRANS. TRUSS CL-1	CL-2	CL-3	CL-4	Fs
9'-6½"	22'-10½"	36'-2½"	49'-6½"	-2½"

CHORD PLATE MK.	TYPE STEEL	SIZE	LENGTH
CP30	A36	6½"x.50"	3'-5"

CORE END

EL END TRUSS DESIGNATION	BEARING ANGLES MK.	TYPE STEEL	CHORD SIZE	LENGTH	WEv	DIAGONAL "Tv" STRUT MK.	TYPE STEEL	DIA	LENGTH	VERTICAL "STv" STRUT MK.	TYPE STEEL	DIA.	LENGTH	END STIFFENER MK. V1 TYPE STEEL	DIA.	LENGTH	MK. V2 TYPE STEEL	DIA.	LENGTH	MK. V4 TYPE STEEL	DIA.	LENGTH	WEB "Wc" MK	TYPE STEEL	PCS	DIA	LENGTH	DOUBLE STRUT MK.	TYPE STEEL	DIA	LENGTH	DOUBLE STRUT MK	TYPE STEEL	DIA	LENGTH	(6) DOUBLE STRUT REQD MK	TYPE STEEL	DIA	LENGTH
C32T37P 577	9	A242	2"x1½"x.37	11¾"	4'-7¼"	10	A242	1.14	3'-7"	5	A242	1.14	2'-[illegible]	A242	1.14	4⅜"	A242	1.14	7⅜"				4	A242	1	1.14	2'-9"	DS4	A242	1.14	2'-9½"	DS10	A242	1.14	3'-7"	DS3	A242	1.14	2'-6¾"

STEEL TRUSS DETAILS
FOR
WORLD TRADE CENTER - N.Y.C.
FOR
THE PORT OF NEW YORK AUTHORITY

FLOOR TRUSS C32T37P 57'-7" OVERALL
WORLD TRADE CENTER TOWERS A & B

FABRICATION BY: LACLEDE STEEL COMPANY

FABRICATED AT: MADISON, ILLINOIS		DESIGN DRAWING NO. 7-AB1-33	PLATE
APPROVED FOR FABRICATION BY: _______ FOR P.O.N.Y.A.	DATE	DRAWN BY: DATE: MAY 6, 1969	
APPROVED FOR FABRICATION BY: _______ FOR FABRICATOR	DATE.	CHECKED BY: DATE: MAY 6, 1969	IN CHARGE OF PROD.
DETAILED BY: LACLEDE STEEL CO.		FABRICATION CONT. NO. W.T.C. 221	SHEET NO.

TRUSS ELEVATION

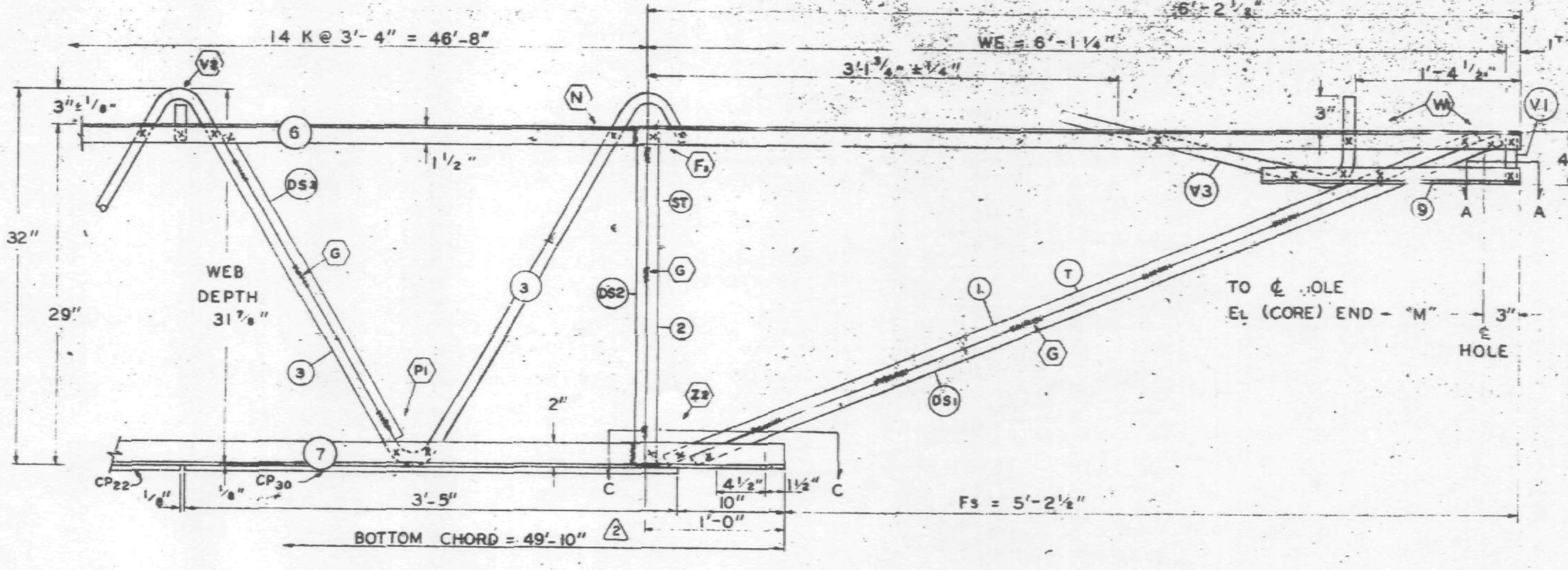

Es END (COLUMN)

ALL PANEL POINTS RESISTANCE WELDED (X)
ARC WELDS INDICATED AT SHADED AREAS AND AT BOTTOM CHORD WEB SPLICES
ALL WELD DETAILS SHOWN ON SHEETS ST290 - ST294 AND ST286 (1)
SEE SHEET ST295 FOR V1, V2 V3, DETAILS
LETTERS IN HEXAGON INDICATE WELD DETAILS i.e. (A)
LETTERS AND NUMBERS IN SQUARES INDICATE RESISTANCE WELD STRENGTH IDENTIFIED IN THE QUALITY CONTROL PROGRAM, i.e. [RI]

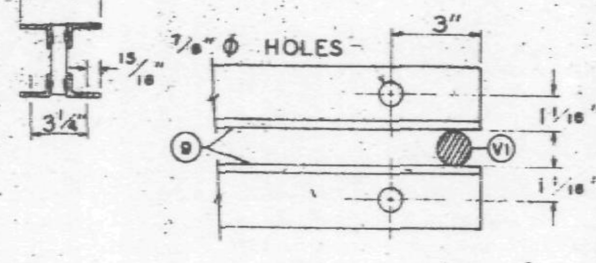

SECTION A-A

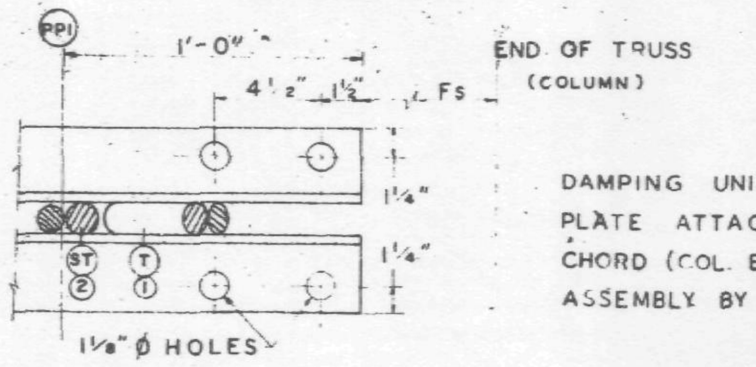

DAMPING UNIT CONNECTION PLATE ATTACHED TO BOTTOM CHORD (COL. END) IN FIELD. ASSEMBLY BY OTHERS.

SECTION C-C

FABRICATION REQUIREMENTS	DESIGN	TOLERANCE
CAMBER AT MIDSPAN	[illegible] 1/4"	± [illegible]
DESIGN DEPTH	[illegible]	± [illegible]
PANEL "K"	3'-4"	± [illegible]
OVERALL LENGTH	57'-9"	± 3/[illegible]"
WEB DEPTH	31 7/8"	± 1/4"

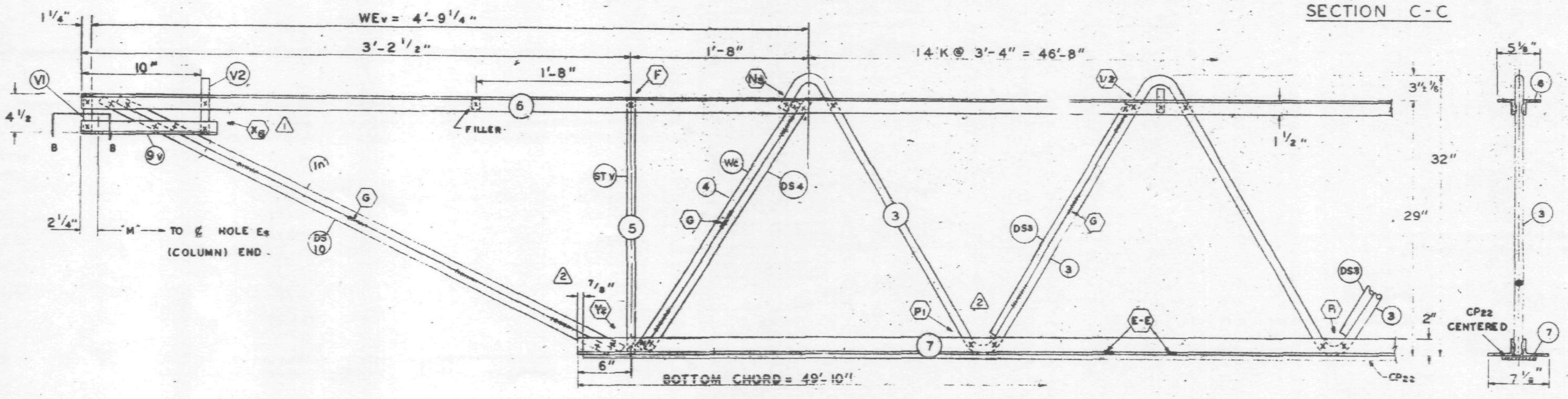

El END (CORE)

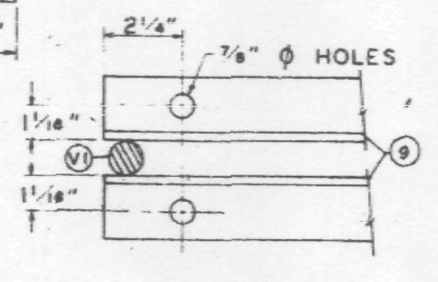

SECTION B-B

NO.	DATE	REVISION	BY
2	2-26-69	AS NOTED	G.D.
1	2-18-69	AS NOTED	T.M.

REF DRWG.

7-A81-53	1-6-69
7-A84-50	8-1-68
7-A83-41	1-6-69
7-A81-53	7-22-68

PAINT
LACLEDE ELECTROCOAT
RED NO. 10001

TRUSS DESIGNATION	TOP CHORD TWO ANGLES				BOTTOM CHORD TWO ANGLES				MAIN WEB "W"					FILLER		"M" C/C HOLES	CONNECTION FILLERS			CHORD PLATE				DOUBLE STRUT			
	MK.	TYPE STEEL	CHORD SIZE	LENGTH	MK.	TYPE STEEL	CHORD SIZE	LENGTH	MK.	TYPE STEEL	DIA.	LENGTH	NO. OF K	NO.	DIA.		NO	DIA.	LENGTH	MK	TYPE STEEL	SIZE	LENGTH	MK	TYPE STEEL	DIA	LENGTH
C32T37N-579	6	A242	2"x1½"x37"	57'-9"	7	A36	3"x2"x37	49'-10"	3	A242	1.14	88'-1¼"	14 @ 3'-4" = 46'-8"	11	1.14	57'-3¾"	4	1.14	3"	CP22	A36	6½"x.50	45'-6"	DS2	A242	.75	2'-4⅞"

COLUMN END

Es END TRUSS DESIGNATION	BEARING ANGLES				WE	DIAGONAL "T" STRUT				VERTICAL "ST" STRUT				END STIFFENER MK. V1			END STIFFENER MK. V3			DOUBLE STRUT			
	MK.	TYPE STEEL	CHORD SIZE	LENGTH		MK	TYPE STEEL	DIA	LENGTH	MK.	TYPE STEEL	DIA.	LENGTH	TYPE STEEL	DIA.	LENGTH	TYPE STEEL	DIA.	LENGTH	MK	TYPE STEEL	DIA	LGTH.
C32T37N-579	9	A242	2"x1½"x.37	2'-3"	6'-1¼"	1	A242	1.14	6'-3⅛"	2	A242	1.14	2'-4⅝"	A242	1.14	4⅜"	A242	1.1[illegible]	[illegible]'-9½"	[illegible]	A242	1.14	6'-3⅛"

(1)

CHECK DIMENSION FOR TRUSS FAB. LOCATION OF TRANS. TRUSS				
CL-1	CL-2	CL-3	CL-4	Fs
9'-6½"	22'-10½"	36'-2½"	49'-6½"	5'-2½"

CHORD PLATE (2)			
MK.	TYPE STEEL	SIZE	LENGTH
CP30	A36	6½"x.50"	3'-5"

CORE END

El END TRUSS DESIGNATION	BEARING ANGLES				WEv	DIAGONAL "T" STRUT				VERTICAL "ST" STRUT				END STIFFENER MK. V1			END STIFFENER MK. V2			END STIFFENER MK. V4			WEB "Wc"					DOUBLE STRUT				DOUBLE STRUT				(6) DOUBLE (RODS) STRUT			
	MK.	TYPE STEEL	CHORD SIZE	LENGTH		MK.	TYPE STEEL	DIA	LENGTH	MK.	TYPE STEEL	DIA.	LENGTH	TYPE STEEL	DIA.	LENGTH	TYPE STEEL	DIA.	LENGTH	TYPE STEEL	DIA.	LENGTH	MK	TYPE STEEL	PCS	DIA	LENGTH	MK.	TYPE STEEL	DIA	LENGTH	MK	TYPE STEEL	DIA	LENGTH	MK	TYPE STEEL	DIA	LENGTH
C32T37N-579	9	A242	2"x1½"x.37	1'-0"	4'-9¼	10	A242	1.14	3'-8¼	5	A242	1.14	2'-4⅞"	A242	1.14	4⅜	A242	1.14	7⅛				4	A242	1	1.14	2'-9½"	DS4	A242	1.14	2'-9½"	DS10	A242	1.14	3'-8¼	DS3	A242	1.14	2'-8¾"

(1)

STEEL TRUSS DETAILS
FOR
WORLD TRADE CENTER - N.Y.C.
FOR
THE PORT OF NEW YORK AUTHORITY

FLOOR TRUSS C32T37N 57'-9" OVERALL
WORLD TRADE CENTER TOWERS A & B.

FABRICATION BY LACLEDE STEEL COMPANY			
FABRICATED AT: MADISON, ILLINOIS		DESIGN DRAWING NO. 7-AM-[illegible]	PLATE
APPROVED FOR FABRICATION FOR P.O.N.Y.A. [signature]	DATE 2/14/69	DRAWN BY: [illegible] DATE JAN. 20 1969	
APPROVED FOR FABRICATION BY FOR FABRICATOR LACLEDE STEEL CO.	DATE.	CHECKED BY: T.[illegible] DATE JAN. 21, 1969	IN CHARGE OF PROD. DEV.
DETAILED BY A.C. WEBER		FABRICATION CONT. NO. W.T.C. 221	SHEET NO ST237N

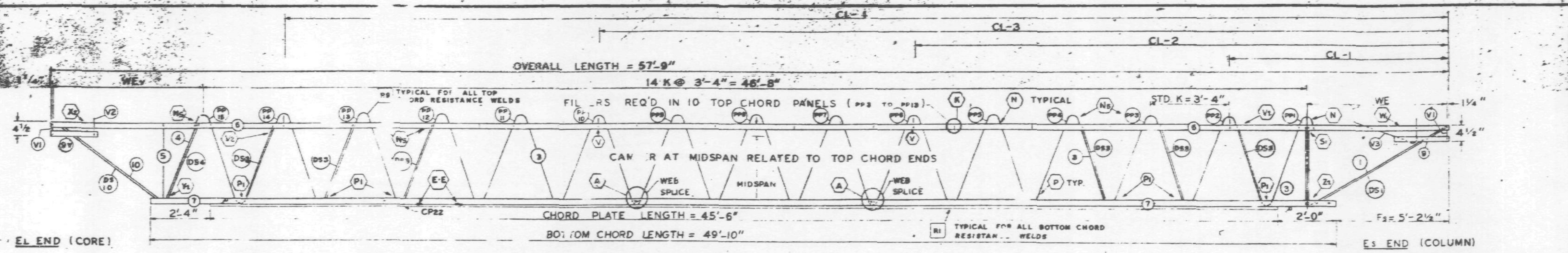

TRUSS ELEVATION

FABRICATION TOLERANCES	DESIGN	TOLERANCE
CAMBER AT MIDSPAN	[illegible]	[illegible]
DESIGN DEPTH	[illegible]	± 1/4
PANEL "K"	3'-4"	± 1/4
OVERALL LENGTH	57'-9"	3/8"
WEB DEPTH	31 7/8	± 1/4

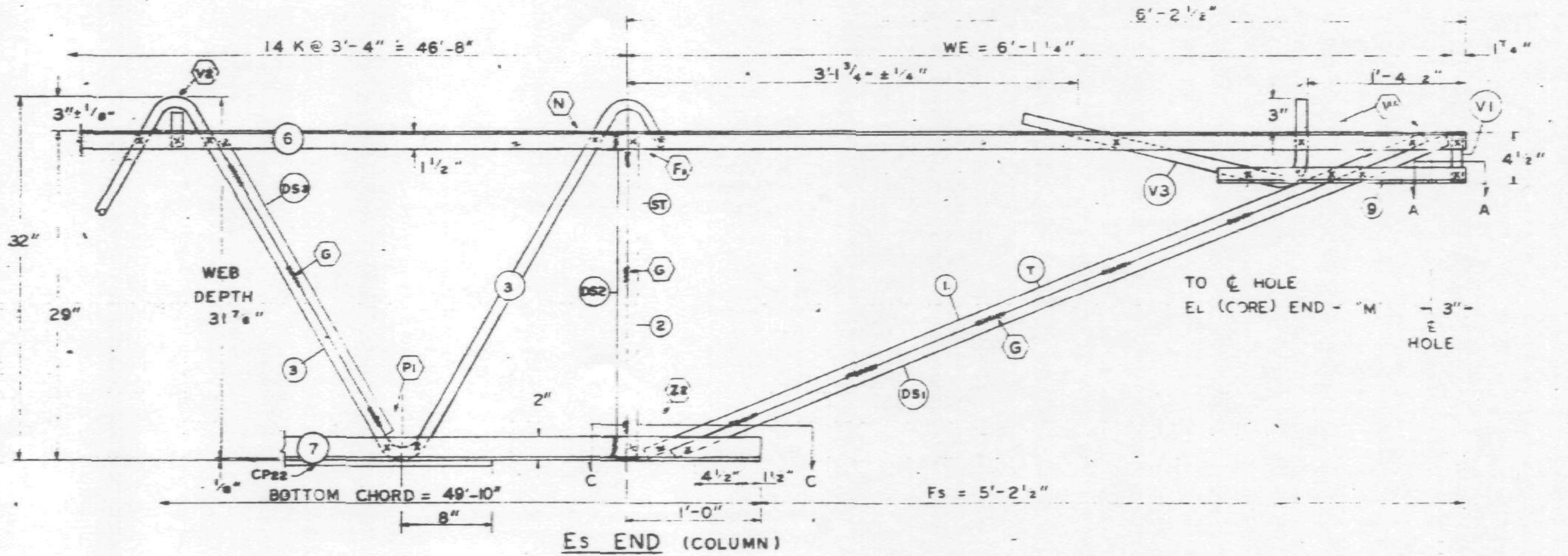

Es END (COLUMN)

ALL PANEL POINTS RESISTANCE WELDED (x)
ARC WELDS INDICATED AT SHADED AREAS AND AT BOTTOM CHORD WEB SPLICES
ALL WELD DETAILS SHOWN ON SHEETS ST290 – ST294 AND ST286 △
SEE SHEET ST295 FOR V1, V2, V3, DETAILS
LETTERS IN HEXAGON INDICATE WELD DETAILS ie. (A)
LETTERS AND NUMBERS IN SQUARES INDICATE RESISTANCE WELD STRENGTH IDENTIFIED IN THE QUALITY CONTROL PROGRAM ie. R1

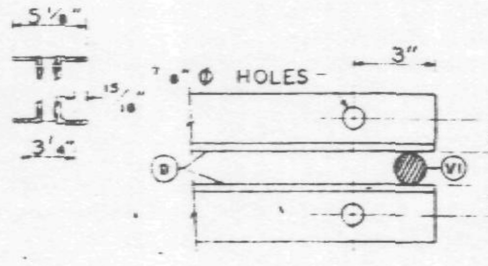

SECTION A-A

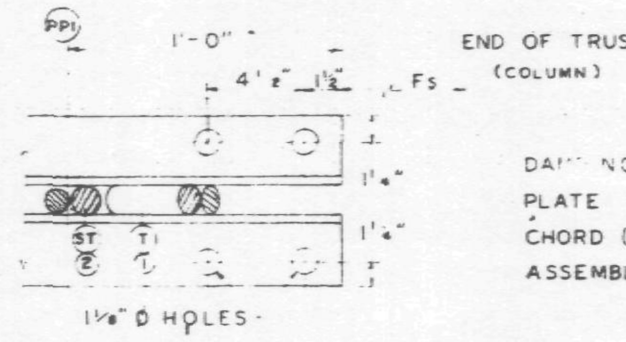

SECTION C-C

DAMPING UNIT CONNECTION PLATE ATTACHED TO BOTTOM CHORD (COL END) IN FIELD. ASSEMBLY BY OTHERS.

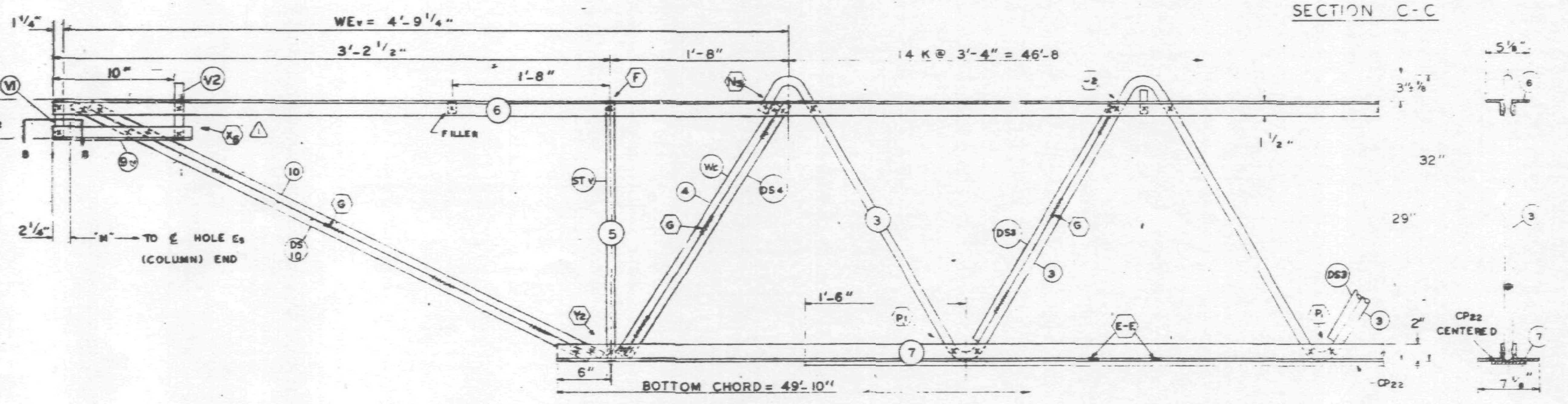

EL END (CORE)

NO.	DATE	REVISION	BY
△1	2-18-69	AS NOTED	T.M.C.

REF DRWG.

7-AB1-38	1-8-69
7-AB4-50	8-1-68
7-AB3-41	1-6-69
7-AB1-53	7-22-68

PAINT
LACLEDE ELECTROCOAT
RED NO. 10001

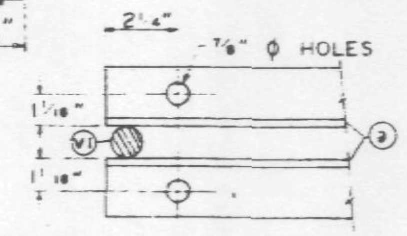

SECTION B-B

TRUSS DESIGNATION	TOP CHORD TWO ANGLES				BOTTOM CHORD TWO ANGLES				MAIN WEB "W"					FILLER		"M" C/C HOLES	CONNECTION FILLERS			CHORD PLATE				DOUBLE STRUT			
	MK.	TYPE STEEL	CHORD SIZE	LENGTH	MK.	TYPE STEEL	CHORD SIZE	LENGTH	MK.	TYPE STEEL	DIA.	LENGTH	NO. OF K	NO.	DIA.		NO	DIA.	LENGTH	MK	TYPE STEEL	SIZE	LENGTH	MK	TYPE STEEL	DIA	LENGTH
C32T37N-579	6	A242	2"x1½"x.37"	57'-9"	7	A36	3"x2"x.37	49'-10"	3	A242	1.14	88'-1¼"	14 @ 3'-4" = 46'-8"	11	1.14	57'-3¾"	4	1.14'	3"	CP 22	A36	6½"x.50	45'-6"	DS 2	A242	.75	2'-4⅞"

COLUMN END	Es END	TRUSS DESIGNATION	BEARING ANGLES				WE	DIAGONAL "T" STRUT				VERTICAL "ST" STRUT				END STIFFENER MK. V1			END STIFFENER MK. V3			DOUBLE STRUT			
			MK.	TYPE STEEL	CHORD SIZE	LENGTH		MK	TYPE STEEL	DIA	LENGTH	MK.	TYPE STEEL	DIA.	LENGTH	TYPE STEEL	DIA.	LENGTH	TYPE STEEL	DIA.	LENGTH	MK	TYPE STEEL	DIA	LGTH.
		C32T37N-579	9	A242	2"x1½"x.37 △1	2'-3"	6'-1¼"	1	A242	1.14	6'-3⅛"	2	A242	1.14	2'-4⅞"	A242	1.14	4⅜"	A242	1.14	9½"	DS 1	A242	1.14	6'-3⅛"

CHECK DIMENSION FOR TRUSS FAB. LOCATION OF TRANS. TRUSS				
CL-1	CL-2	CL-3	CL-4	Fs
9'-6½"	22'-10½"	36'-2½"	49'-6½"	5'-2½"

CORE END	EL END	TRUSS DESIGNATION	BEARING ANGLES				WEv	DIAGONAL "Tv" STRUT				VERTICAL "STv" STRUT				END STIFFENER MK. V1			END STIFFENER MK. V2			END STIFFENER MK. V4			WEB "Wc"					DOUBLE STRUT				DOUBLE STRUT				(6) REQ'D DOUBLE STRUT			
			MK.	TYPE STEEL	CHORD SIZE	LENGTH		MK.	TYPE STEEL	DIA	LENGTH	MK.	TYPE STEEL	DIA.	LENGTH	TYPE STEEL	DIA.	LENGTH	TYPE STEEL	DIA.	LENGTH	TYPE STEEL	DIA.	LENGTH	MK	TYPE STEEL	PCS	DIA	LENGTH	MK.	TYPE STEEL	DIA	LENGTH	MK	TYPE STEEL	DIA	LENGTH	MK	TYPE STEEL	DIA	LENGTH
		C32T37N-579	9	A242	2"x1½"x.37 △1	1'-0"	4'-9¼"	10	A242	1.14	3'-8¼"	5	A242	1.14	2'-4⅞"	A242	1.14	4⅜"	A242	1.14	7⅝"				4	A242	1	1.14	2'-9½"	DS 4	A242	1.14	2'-9½"	DS 10	A242	1.14	3'-8¼"	DS 3	A242	1.14	2'-8¾"

STEEL TRUSS DETAILS
FOR
WORLD TRADE CENTER - N.Y.C.
FOR
THE PORT OF NEW YORK AUTHORITY

FLOOR TRUSS C32T37N 57'-9" OVERALL
WORLD TRADE CENTER TOWERS A & B

FABRICATION BY: LACLEDE STEEL COMPANY
FABRICATED AT: MADISON, ILLINOIS
DRAWING NO. 7-A0-29 PLATE
APPROVED FOR FABRICATION BY: James White FOR ... DATE
DRAWN BY: ... DATE: JAN. 20 1969
[redacted] BY ... FOR FABRICATOR DATE
CHECKED BY: ... DATE: ...
IN CHARGE OF ...
DETAILED BY: A.C. ...
FABRICATION CONT. NO. W.T.C. 221
SHEET NO. ...

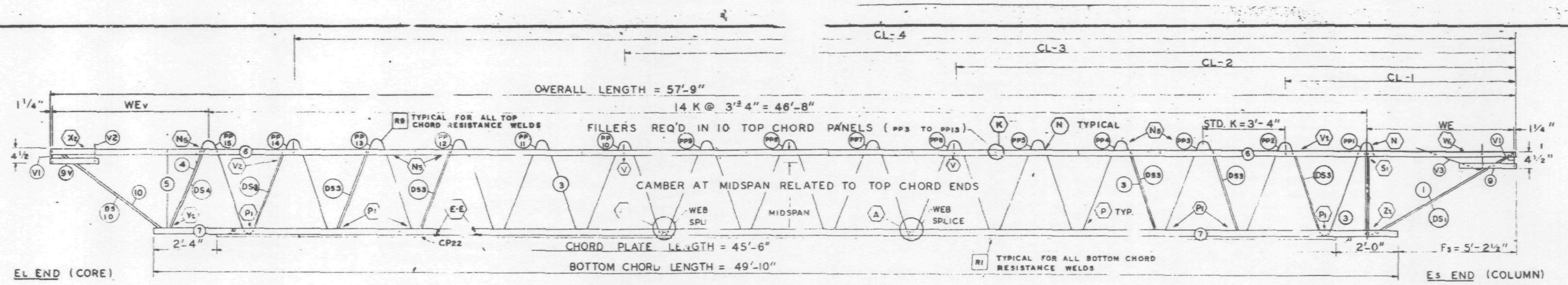

TRUSS ELEVATION

FABRICATION REQUIRMENTS	DESIGN	TOLERANCE
CAMBER AT MIDSPAN	2 1/4"	± 3/8"
DESIGN DEPTH	29"	± 1/4"
PANEL "K"	3'-4"	± [illegible]
OVERALL LENGTH	57'-9"	[illegible]
WEB DEPTH	31 7/8"	± 1/4"

ALL PANEL POINTS RESISTANCE WELDED (X)
ARC WELDS INDICATED AT SHADED AREAS AND AT BOTTOM CHORD WEB SPLICES
ALL WELD DETAILS SHOWN ON SHEETS ST290 – ST294 AND ST287
SEE SHEET ST295 FOR V1, V2, V3, DETAILS
LETTERS IN HEXAGON INDICATE WELD DETAILS ie. (A)
LETTERS AND NUMBERS IN SQUARES INDICATE RESISTANCE WELD STRENGTH IDENTIFIED IN THE QUALITY CONTROL PROGRAM, ie. [R1]

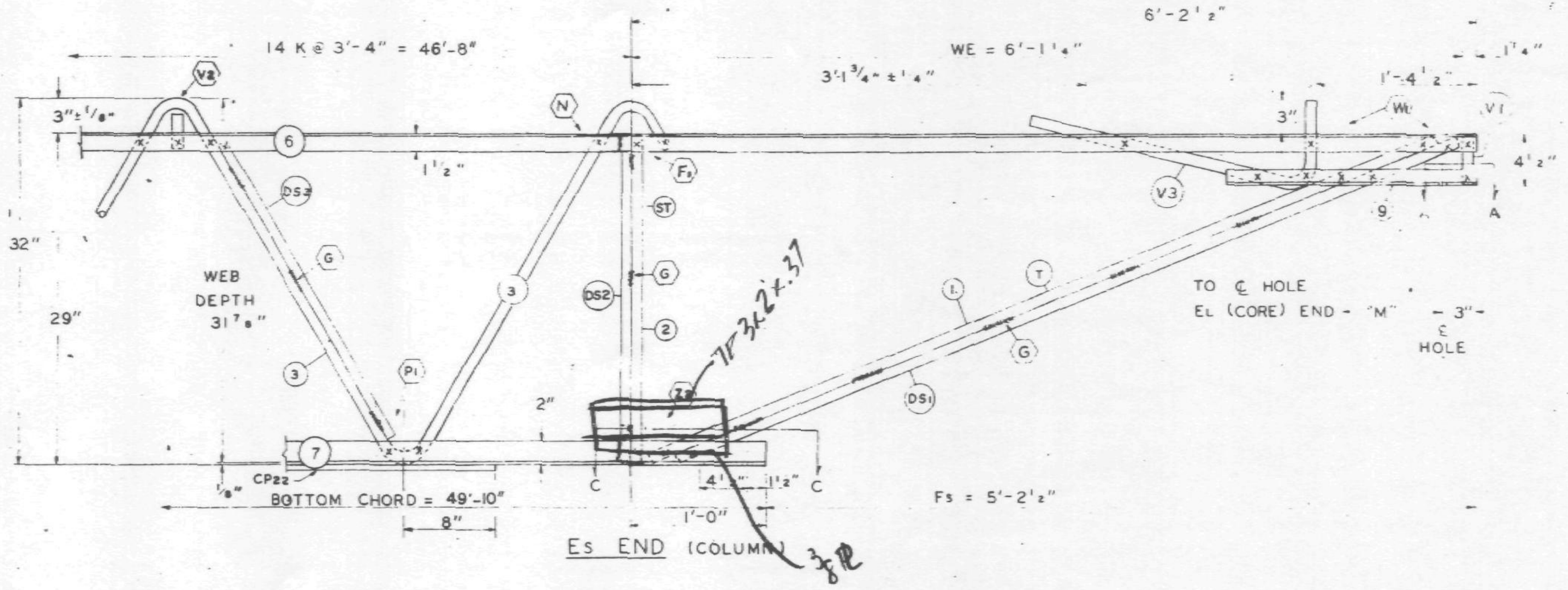

Es END (COLUMN)

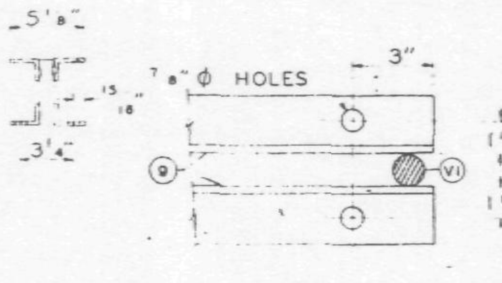

SECTION A-A

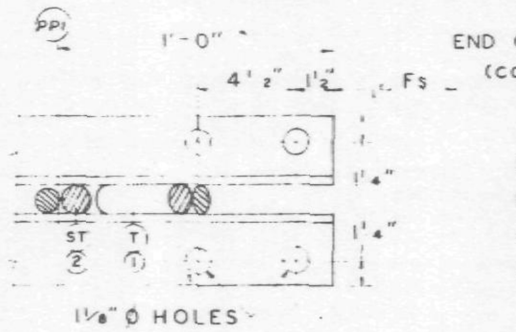

SECTION C-C

DAMPING UNIT CONNECTION PLATE ATTACHED TO BOTTOM CHORD (COL END) IN FIELD. ASSEMBLY BY OTHERS.

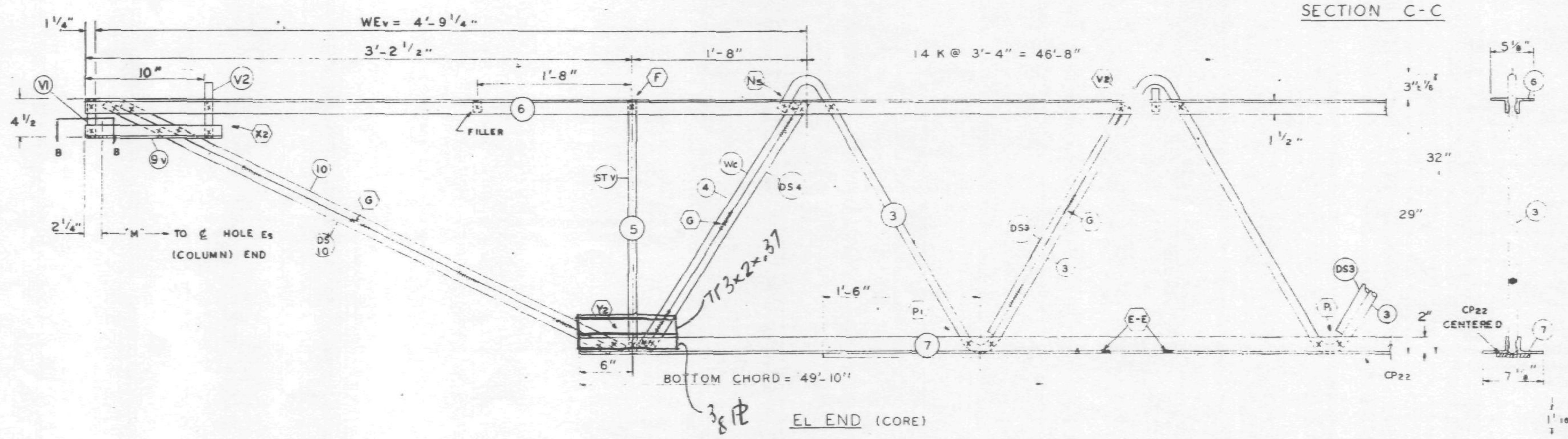

EL END (CORE)

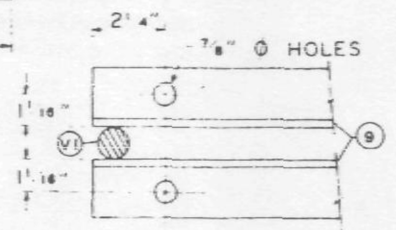

SECTION B-B

REF DRWG.	
7-AB1-33	1-8-69
7-AB4-50	8-1-68
7-AB3-41	1-6-69
7-AB1-53	7-22-68

PAINT
LACLEDE ELECTROCOAT
RED NO. 10001

TRUSS DESIGNATION	TOP CHORD TWO ANGLES				BOTTOM CHORD TWO ANGLES				MAIN WEB "W"					FILLER		"M" C/C HOLES	CONNECTION FILLERS			CHORD PLATE				DOUBLE STRUT			
	MK.	TYPE STEEL	CHORD SIZE	LENGTH	MK.	TYPE STEEL	CHORD SIZE	LENGTH	MK.	TYPE STEEL	DIA.	LENGTH	NO. OF K	NO	DIA		NO	DIA	LENGTH	MK	TYPE STEEL	SIZE	LENGTH	MK	TYPE STEEL	DIA	LENGTH
C32T37N-579	6	A242	2"x1½"x.37	57'-9"	7	A36	3"x2"x.37	49'-10"	3	A242	1.14	88'-1¼"	14 @ 3'-4" = 46'-8"	11	1.14	57'-3¾"	4	1.14	3"	CP22	A242	6½"x.50	45'-6"	DS2	A242	.75	2'-4⅞"

COLUMN END

Es END: TRUSS DESIGNATION	BEARING ANGLES				WE	DIAGONAL "T" STRUT				VERTICAL "ST" STRUT				END STIFFENER MK. V1			END STIFFENER MK. V3			DOUBLE STRUT			
	MK	TYPE STEEL	CHORD SIZE	LENGTH		MK	TYPE STEEL	DIA	LENGTH	MK.	TYPE STEEL	DIA.	LENGTH	TYPE STEEL	DIA	LENGTH	TYPE STEEL	DIA.	LENGTH	MK	TYPE STEEL	DIA	LGTH.
C32T37N-579	9	A242	2"x1½"x.25 (.37)	2'-3"	6'-1¼"	1	A242	1.14	6'-3⅛"	2	A242	1.14	2'-4⅞"	A242	1.14	4⅜"	A242	[illegible]	[illegible]'-9½"	DS1	A242	1.14	6'-3⅛"

CHECK DIMENSION FOR TRUSS FAB.

LOCATION OF TRANS. TRUSS				
CL-1	CL-2	CL-3	CL-4	Fs
9'-6½"	22'-10½"	36'-2½"	49'-6½"	5'-2½"

X
2/19/69 SK

CORE END

EL END: TRUSS DESIGNATION	BEARING ANGLES				WEv	DIAGONAL "Tv" STRUT				VERTICAL "STv" STRUT				END STIFFENER MK. V1			END STIFFENER MK. V2			END STIFFENER MK. V4			WEB "Wc"					DOUBLE STRUT				DOUBLE STRUT				(6) DOUBLE STRUT (REQD)			
	MK.	TYPE STEEL	CHORD SIZE	LENGTH		MK.	TYPE STEEL	DIA	LENGTH	MK.	TYPE STEEL	DIA.	LENGTH	TYPE STEEL	DIA.	LENGTH	TYPE STEEL	DIA.	LENGTH	TYPE STEEL	DIA.	LENGTH	MK	TYPE STEEL	PCS	DIA	LENGTH	MK.	TYPE STEEL	DIA	LENGTH	MK	TYPE STEEL	DIA	LENGTH	MK	TYPE STEEL	DIA	LENGTH
C32T37N-579	9	A242	2"x1½"x.25 (.37)	1'-0"	4'-9¼"	10	A242	1.14	3'-7⅜"	5	A242	1.14	2'-4⅞"	A242	1.14	4⅜"	A242	1.14	7⅜"				4	A242	1	1.14	2'-9½"	DS4	A242	1.14	2'-9½"	DS10	A242	1.14	3'-7⅜"	DS3	A242	1.14	2'-6¾"

STEEL TRUSS DETAILS
FOR
WORLD TRADE CENTER - N.Y.C.
FOR
THE PORT OF NEW YORK AUTHORITY

FLOOR TRUSS C32T37N 57'-9" OVERALL
WORLD TRADE CENTER TOWERS A & B

FABRICATION BY: LACLEDE STEEL COMPANY	
FABRICATED AT: MADISON, ILLINOIS	DESIGN DRAWING NO. 7-AB1-33 PLATE
APPROVED FOR FABRICATION BY: ______ FOR P.O.N.Y.A. DATE	DRAWN BY: [illegible] DATE: JAN. 20 1969
APPROVED FOR FABRICATION BY: A.C. WEBER FOR FABRICATOR DATE.	CHECKED BY: T.M. CHURA DATE: JAN. 21, 1969 — IN CHARGE OF PROD. DEV.
DETAILED BY: A.C. WEBER	FABRICATION CONT. NO. W.T.C. 221 — SHEET NO. ST237N

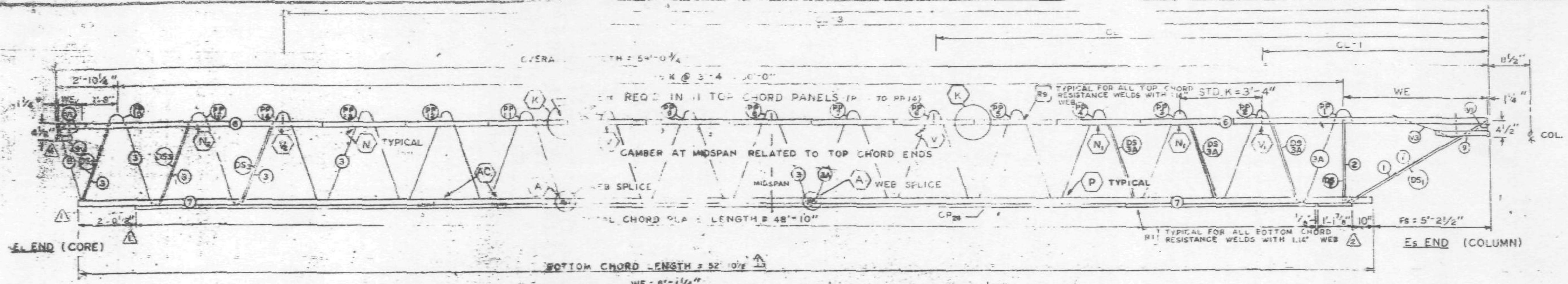

TRUSS ELEVATION

FABRICATION	
CAMBER AT MIDSPAN	[illegible]
DESIGN DEPTH	[illegible]
PANEL "K"	[illegible]
OVERALL LENGTH	[illegible]
WEB DEPTH	[illegible]

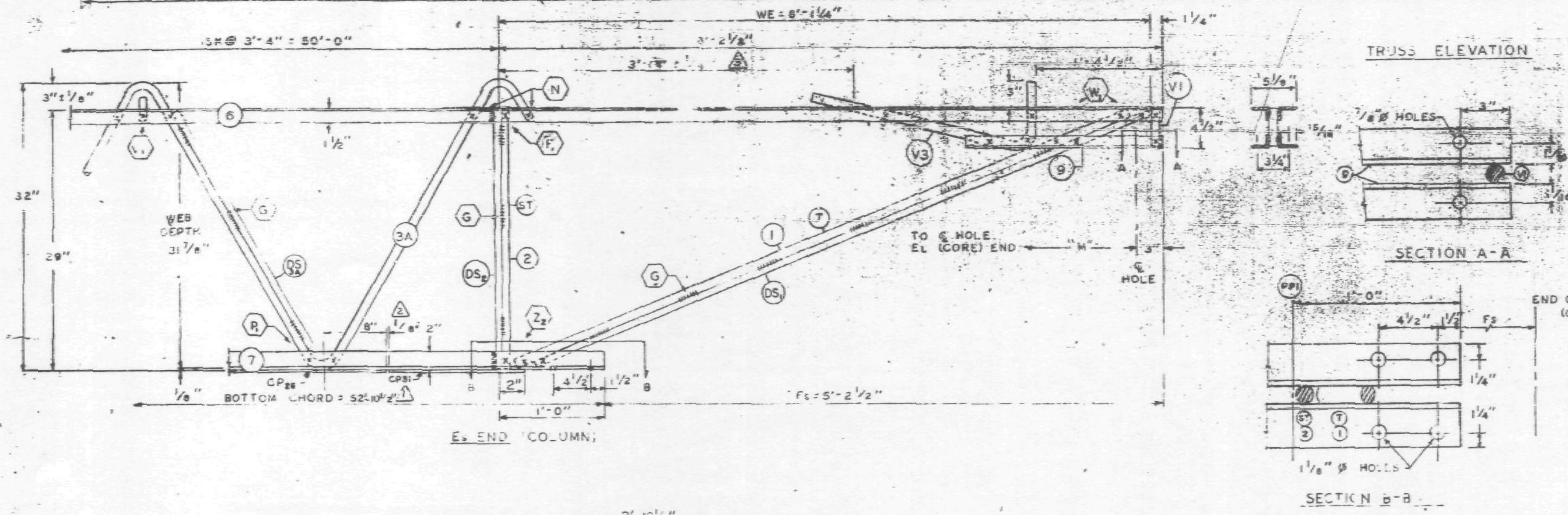

ALL PANEL POINTS RESISTANCE WELDED (X)
ARC WELDS INDICATED AT SHADED AREAS AND AT BOTTOM CHORD WEB SPLICES
ALL WELD DETAILS SHOWN ON SHEETS ST290, ST291, ST292, ST293, AND ST294
CHORD PLATE DETAILS SHOWN ON SHEET ST288.
SEE SHEET ST295 FOR V1 & V3 DETAILS
LETTERS IN HEXAGON INDICATE WELD DETAILS (A)
LETTERS AND NUMBERS IN SQUARES INDICATE RESISTANCE WELD STRENGTH IDENTIFIED IN THE QUALITY CONTROL PROGRAM [R-1]

DAMPING UNIT CONNECTION PLATE ATTACHED TO BOTTOM CHORD (COL. END) IN FIELD ASSEMBLY BY CONTRACT W.T.C. 223.00.

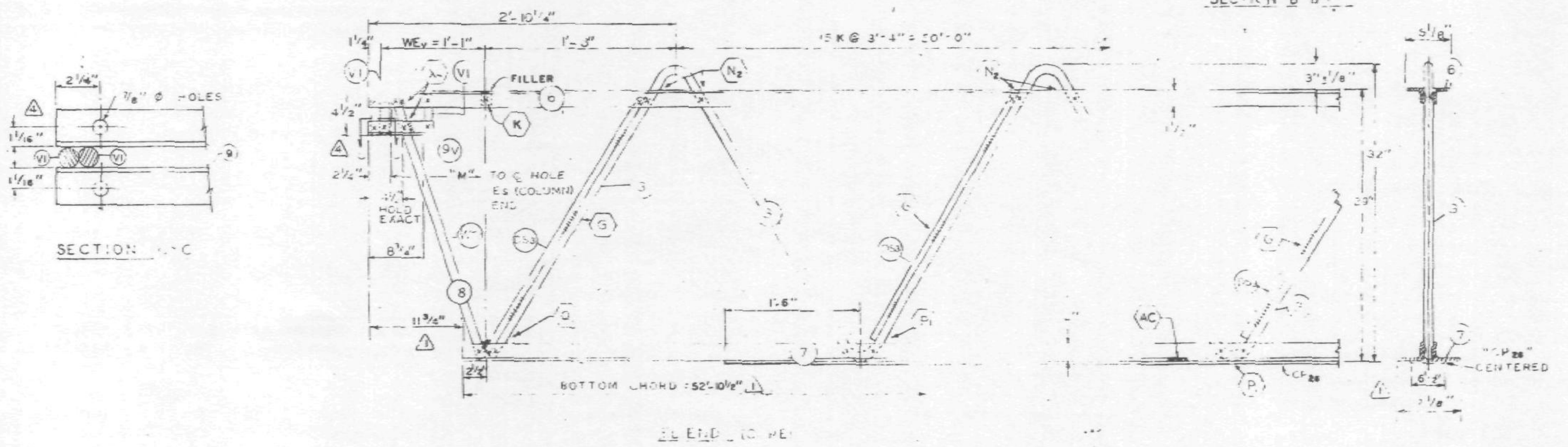

NO.	DATE	REVISION	BY
5	3-11-69	AS NOTED	G.D.C.
4	3-3-69	END STIFFENER	D.C.C.
3	2-21-69	AS NOTED	G.D.C.
2	2-18-69	AS NOTED	T.M.C.
1	1-31-69	AS NOTED	G.D.C.

REF. DRWG.

7-AB1-34	1-6-68
7-AB1-52	2-15-68
7-AB4-14	1-3-68
7-AB1-54	11-25-66
7-AB1-53	7-22-68
7-AB3-70	11-25-38

PAINT
LACLEDE ELECTROCOAT
RED NO 10001

TRUSS DESIGNATION	TOP CHORD TWO ANGLES MK	TYPE STEEL	CHORD SIZE	LENGTH	[illegible] MK	TYPE STEEL	[illegible] SIZE	LENGTH	WEB MK	TYPE STEEL	DIA	LENGTH	[illegible]	[illegible]	[illegible]	[illegible]	[illegible]	[illegible]	[illegible]	MK	TYPE STEEL	SIZE	LENGTH
C32T38-59075	5	A242	2"x1 1/2"x.37	[illegible]	7	A36	2"x2"x.37"	52'-10 1/2"	3 / 3A	A242 / A242	1.14 / 1.14	56'-0 3/4" / 40'-11 1/4"	9K @ 3'-4" = 30'-0" / 6 1/2K @ 3'-4" = 21'-8"	12	1.14	4	1.14	[illegible]	CP28	A36	6 1/2 x 1/2	48'-10"

CHECK DIMENSION FOR TRUSS FAB.

LOCATION OF TRANS. TRUSS				
CL-1	CL-2	CL-[illegible]	CL-4	
9'-6 1/2"	22'-10 1/2"	36'-2 1/2"	49'-6 1/2"	5'-2 1/2"

COLUMN END

Es END	TRUSS DESIGNATION	BEARING ANGLE MK	TYPE STEEL	CHORD SIZE	LENGTH	WE	[illegible] STRUT MK	TYPE STEEL	DIA	LENGTH	[illegible] STRUT MK	TYPE STEEL	DIA	LENGTH	END STIFFENER TYPE STEEL	DIA	LENGTH	TYPE STEEL	DIA	LENGTH	DOUBLE STRUT MK	TYPE STEEL	DIA	LENGTH	DOUBLE STRUT MK	TYPE STEEL	DIA	LENGTH (3 REQ'D)	DOUBLE STRUT MK	TYPE STEEL	DIA	LENGTH	CHORD PLATE MK	TYPE STEEL	SIZE	LGTH
	C32T38-59075	9	A242	2"x1 1/2"x.37"	2'-3"	6'-1 1/4"	[illegible]	A242	1.14	6'-3 1/8"	[illegible]	A242	1.14	[illegible]-4 7/8"	A242	1.14	0'-4 3/8"	42	1.14	2'-9 1/2"	DS1	A242	1.14	6'-3 1/8"	DS3A	A242	.92	2'-6 3/4"	DS2	A242	.75	2'-4 7/8"	[illegible]	A36	6 1/2 x .50	[illegible]

CORE END

Es END	TRUSS DESIGNATION	BEARING ANGLE MK	TYPE STEEL	SIZE	LENGTH	WEV	DOUBLE STRUT MK	TYPE STEEL	DIA	LENGTH	DOUBLE STRUT MK	TYPE STEEL	DIA	LENGTH	END STIFFENER TYPE STEEL	DIA	LENGTH (3 REQ'D)	WEB "WCV" MK	TYPE STEEL	DIA	LENGTH	WEB "WTV" MK	TYPE STEEL	DIA	LENGTH
	C32T38-59075	9V	A242	2"x1 1/2"x.37"	0'-10"	1'-1"	DS3	A242	1.14	2'-6 3/4"	—	—	—	—	A242	1.14	4 3/8"	—	—	—	—	[illegible]	A242	1.14	2'-6 3/4"

STEEL TRUSS DETAILS
FOR
WORLD TRADE CENTER - N.Y.C.
FOR
THE PORT OF NEW YORK AUTHORITY

FLOOR TRUSS C32T38 — 59'-0 3/4" OVERALL
WORLD TRADE CENTER TOWERS A-B

FABRICATION — [illegible] STEEL COMPANY

[illegible]	DATE 3/2/69	DESIGN DRAWING NO. 7-AB1-34	PLATE
	DATE	DRAWN BY [illegible] DATE JAN. 21, 1969	
		CHECKED BY T.M. CHURA DATE JAN. 21, 1969	IN CHARGE OF PROD. DEV.
DETAILED BY A. CARL WEBER		FABRICATION CONT. NO. 221	SHEET NO. ST 238

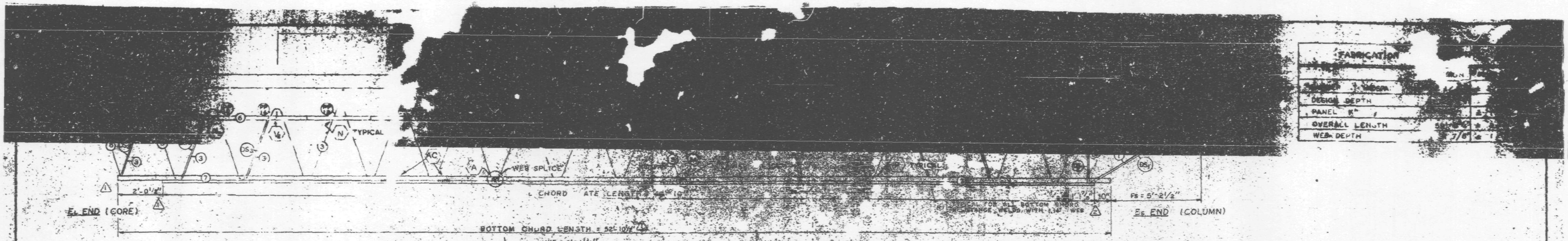

TRUSS ELEVATION

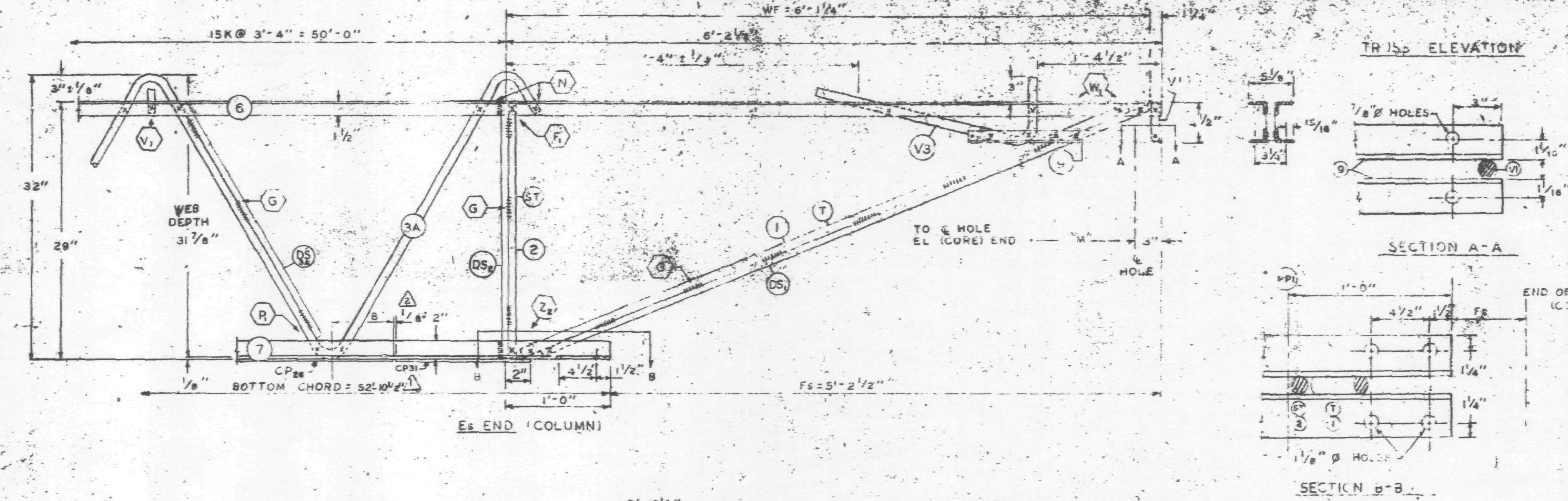

ALL PANEL POINTS RESISTANCE WELDED (X)
ARC WELDS INDICATED AT SHADED AREAS AND AT BOTTOM CHORD WEB SPLICES
ALL WELD DETAILS SHOWN ON SHEETS ST290, ST291, ST292, ST293, AND ST287.

CHORD PLATE DETAILS SHOWN ON SHEET ST288. (2)
SEE SHEET ST295 FOR V1 & V3 DETAILS.
LETTERS IN HEXAGON INDICATE WELD DETAILS, ie. (A)
LETTERS AND NUMBERS IN SQUARES INDICATE RESISTANCE WELD STRENGTH IDENTIFIED IN THE QUALITY CONTROL PROGRAM, ie., [R-1]

DAMPING UNIT CONNECTION PLATE ATTACHED TO BOTTOM CHORD (COL END) IN FIELD ASSEMBLY BY CONTRACT W.T.C. 223.00.

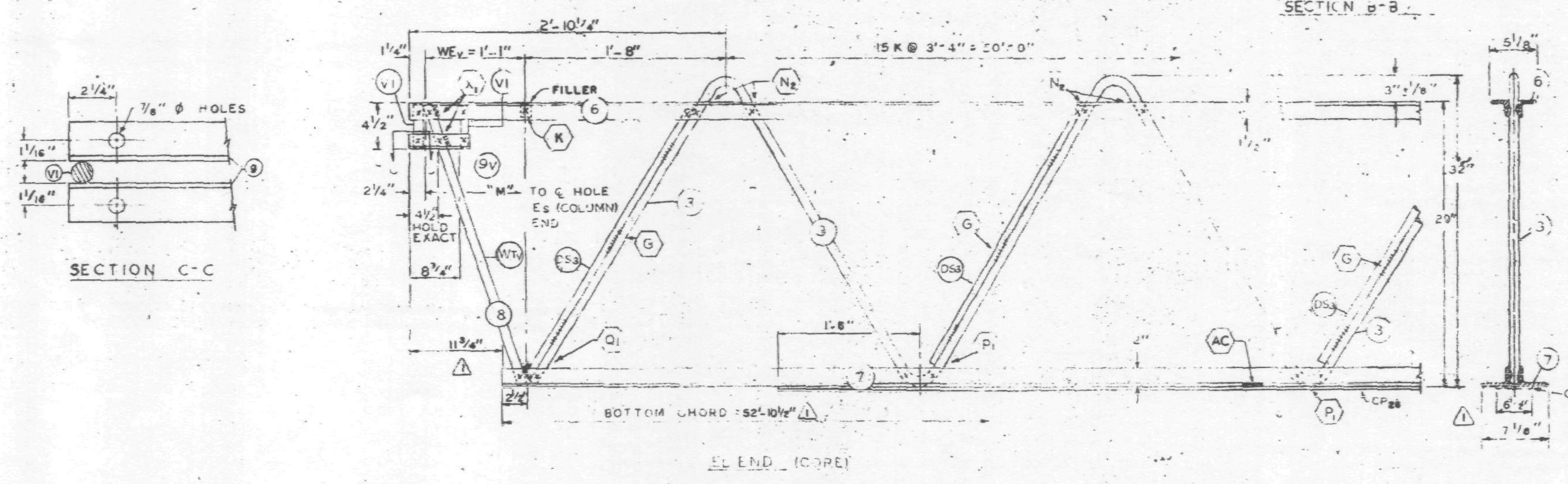

NO.	DATE	REVISION	BY
3	2-21-69	AS NOTED	G.D.C.
2	2-18-69	AS NOTED	T.M.C.
1	1-31-69	AS NOTED	G.D.C.

REF. DRWG.

7-AB1-34	1-6-68
7-AB1-52	2-15-68
7-AB4-14	1-3-68
7-AB1-54	11-25-68
7-AB1-53	7-22-68
7-AB3-70	11-25-58

PAINT
LACLEDE ELECTROCOAT
RED NO. 10001

CHECK DIMENSION FOR TRUSS FAB.

LOCATION OF TRANS. TRUSS				
CL-1	CL-2	CL-3	CL-4	Fs
9'-6½"	22'-10½"	36'-2½"	49'-6½"	5'-2½"

TRUSS DESIGNATION	TOP CHORD TWO ANGLES MK	TYPE STEEL	CHORD SIZE	LENGTH	BOTTOM CHORD MK	TYPE STEEL	CHORD SIZE	LENGTH (1)	MAIN WEB "X" MK	TYPE STEEL	DIA	LENGTH	[illegible]	[illegible]	DIA	CONNECTION FILLER MK	DIA	LENGTH	CHORD PLATE MK	TYPE STEEL	SIZE	LENGTH	[illegible]
C32T38-59075	6	A242	2"x1½"x 3"	[illegible]	[illegible]	A36	[illegible]	52'-10½"	3 3A	A242 A242	1.14 1.14	56'-0¾" 40'-11¼"	9K @ 3'-4" = 30'-0" 6½K @ 3'-4" = 21'-8"	[illegible]	1.14	4	1.14	[illegible]	CP26	A36	6½"x½" (1)	48'-10"	[illegible]

COLUMN END

Es END	TRUSS DESIGNATION	BEARING ANGLE MK	TYPE STEEL	CHORD SIZE	LENGTH (3)	WE	[illegible] MK	TYPE STEEL	DIA	LENGTH	[illegible] MK	TYPE STEEL	DIA	LENGTH	[illegible] TYPE STEEL	[illegible]	LENGTH	TYPE STEEL	[illegible]	[illegible]
	C32T38-59075	9	A242	2"x1½"x.37 (2)	2'-3"	6'-1¼"	[illegible]	A242	1.14	6'-3⅛"	[illegible]	A242	1.14	2'-4⅞"	A242	[illegible]	0'-4"	A[illegible]	1.14	[illegible]

DOUBLE STRUT MK	TYPE STEEL	DIA.	LENGTH	DOUBLE STRUT MK	TYPE STEEL	DIA	LENGTH (3 REQ'D)	DOUBLE STRUT MK	TYPE STEEL	DIA.	LENGTH	CHORD PLATE (2) MK	TYPE STEEL	SIZE	LGTH
DS1	A242	1.14	6'-3[illegible]"	DS3A	A242	.92	2'-6¾"	DS2	A242	.75	2'-4⅞"	CP31	A36	6½ x 50	1'-1⅞"

CORE END

EL END	TRUSS DESIGNATION	BEARING ANGLE MK	TYPE STEEL	SIZE	LENGTH	WEv	DOUBLE STRUT MK	TYPE STEEL	DIA	LENGTH (3 REQ'D)	DOUBLE STRUT MK	TYPE STEEL	[illegible]	LENGTH	END STIFFENER TYPE STEEL	DIA	LENGTH (2 REQ'D)	WEB "WCV" MK	TYPE STEEL	[illegible]	[illegible]	LENGTH	WEB "WTV" MK	TYPE STEEL	[illegible]	DIA	LENGTH
	C32T38-59075	9V	A242	2"x1½"x.37"	0'-10"	1'-1"	DS3	A242	1.14	2'-6¾"	—	—	—	—	A242	1.14	[illegible]4⅜"	—	—	—	—	—	8	A242	1	1.14	2'-6¼"

STEEL TRUSS DETAILS
FOR
WORLD TRADE CENTER - N.Y.C.
FOR
THE PORT OF NEW YORK AUTHORITY

FLOOR TRUSS C32T38 — 59'-0¾" OVERALL
WORLD TRADE CENTER TOWERS A-B

FABRICATED BY LACLEDE STEEL COMPANY
FABRICATED AT [illegible]
DESIGN DRAWING NO. 7-AB1-34
PLATE
APPROVED FOR FABRICATION BY: James White DATE 3/4/69
DRAWN BY [illegible] DATE JAN 21, 1969
CHECKED BY T.M.CHURA DATE JAN 21, 1969
IN CHARGE OF DEV.
LACLEDE STEEL CO.
DETAILED BY [illegible] WEBER
FABRICATION CONT. NO. 221
SHEET NO. ST 238

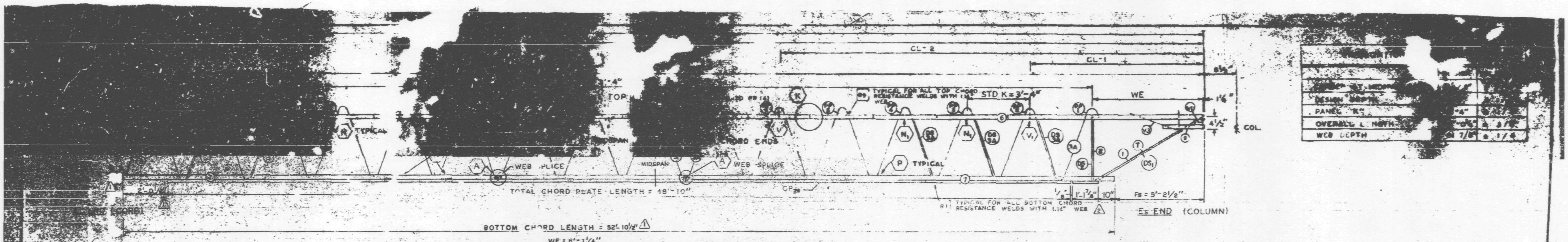

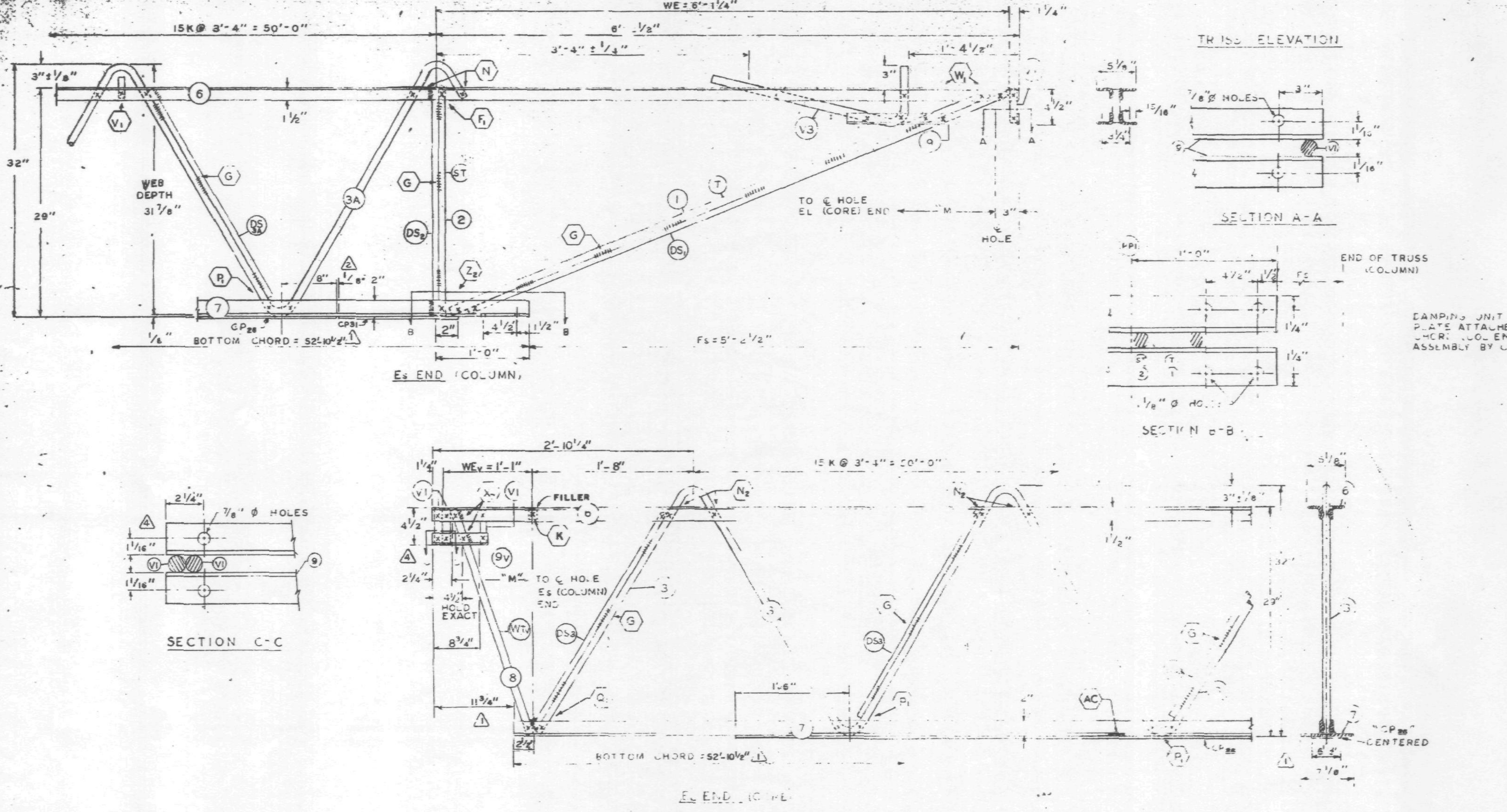

ALL PANEL POINTS RESISTANCE WELDED (x)
ARC WELDS INDICATED AT SHADED AREAS AND AT BOTTOM CHORD WEB SPLICES (as shown)
ALL WELD DETAILS SHOWN ON SHEETS ST290, ST291, ST292, ST293, AND ST287, ST294 (4)
(2)
CHORD PLATE DETAILS SHOWN ON SHEET ST288.
SEE SHEET ST295 FOR V1 & V3 DETAILS
LETTERS IN HEXAGON INDICATE WELD DETAILS, i.e., (A)
LETTERS AND NUMBERS IN SQUARES INDICATE RESISTANCE WELD STRENGTH IDENTIFIED IN THE QUALITY CONTROL PROGRAM, i.e., R-1

NO.	DATE	REVISION	BY
4	3-3-69	END STIFFENER	D.C.C.
3	2-21-69	AS NOTED	G.D.C.
2	2-18-69	AS NOTED	T.M.C.
1	1-31-69	AS NOTED	G.D.C.

REF. DRWG.

7-AB1-34	1-6-68
7-AB1-52	2-15-68
7-AB4-14	1-3-68
7-AB1-54	11-25-68
7-AB1-53	7-22-68
7-AB3-70	11-25-68

PAINT

LACLEDE ELECTROCOAT
RED NO. 10001

TRUSS DESIGNATION	TOP CHORD TWO ANGLES MK	TYPE STEEL	CHORD SIZE	LENGTH	[illegible]			(1) LENGTH	MAIN WEB MK	TYPE STEEL	DIA.	LENGTH	[illegible]			[illegible]		MK	TYPE STEEL	SIZE	LENGTH	[illegible]
C32T38-59075	6	A242	2"x1½"x[illegible]	[illegible]	[illegible]	A36	[illegible]	52'-10½"	3	A242	1.14	56'-0¾"	9K @ 3'-4" = 30'-0"	[illegible]	.14	[illegible]	.14	CP28	A36	6½"x½"	48'-10"	[illegible]
									3A	A242	1.14	40'-11¼"	6½K @ 3'-4" = 21'-8"									

CHECK DIMENSION FOR TRUSS FAB.

LOCATION OF TRANS. TRUSS				
CL-1	CL-2	CL-3	CL-4	Fs
9'-6½"	22'-10½"	36'-2½"	49'-6½"	5'-2½"

COLUMN END

Es END TRUSS DESIGNATION	BEARING ANGLE MK	TYPE STEEL	CHORD SIZE	(3) LENGTH	[illegible]	[illegible]	[illegible]	DOUBLE STRUT MK.	TYPE STEEL	DIA.	LENGTH	DOUBLE STRUT MK	TYPE STEEL	DIA	LENGTH (3 REQ'D)	DOUBLE STRUT MK	TYPE STEEL	DIA.	LENGTH	CHORD PLATE (1) MK	TYPE STEEL	SIZE	LGTH
C32T38-59075	9	A242	2"x1½".37 (2)	3"	6'-1¼"	A242 .14 6'-3⅛"	A242 .14 [illegible]	DS1	A242	1.14	6'-3⅛"	DS3A	A242	.92	2'-6¾"	DS2	A242	.75	2'-4⅞"	CP	A36	6½"x.50	1'-1⅞"

CORE END

EL END TRUSS DESIGNATION	BEARING ANGLE MK	TYPE STEEL	SIZE	LENGTH	WEv	DOUBLE STRUT MK	TYPE STEEL	DIA.	LENGTH (3 REQ'D)	DOUBLE STRUT	END STIFFENER (4)			WEB "W1v"	WEB "W2v" MK	TYPE STEEL	DIA.	LENGTH
C32T38-59075	9V	A242	2"x1½"x.37"	0'-10"	1'-1"	DS4	A242	1.14	2'-6¾"	—	A242	1.14	4⅝"	—	8	A242	1.14	2'-6¼"

STEEL TRUSS DETAILS
FOR
WORLD TRADE CENTER - N.Y.C.
FOR
THE PORT OF NEW YORK AUTHORITY

FLOOR TRUSS C32T38 59'-0¾" OVERALL

WORLD TRADE CENTER TOWERS A-B

FABRICATED BY LACLEDE STEEL COMPANY

DESIGN DRAWING NO. 7-AB1-34

James White 3/10/69

DRAWN BY dec DATE JAN 21, 1969

CHECKED BY [illegible] DATE JAN 21, 1969

LACLEDE STEEL CO.

FABRICATION CONT. NO. 221

SHEET ST 238

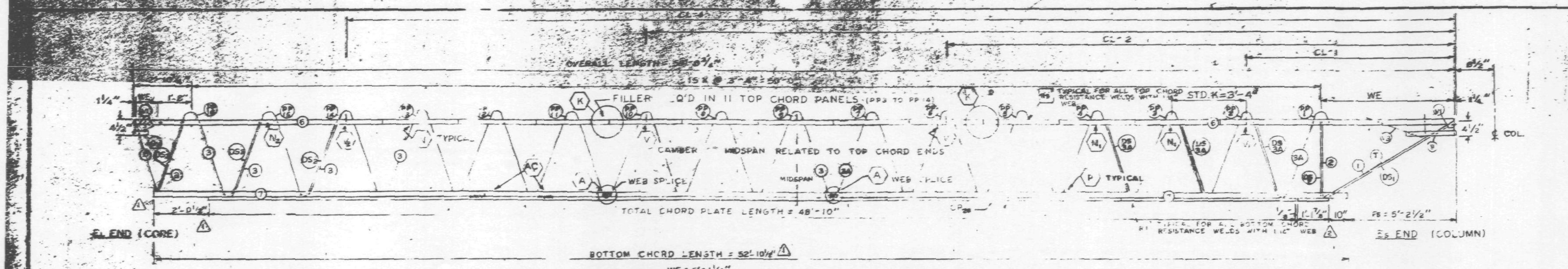

FABRICATION REQUIREMENTS

	DESIGN	[illegible]
CAMBER AT MIDSPAN	[illegible]	[illegible]
DESIGN DEPTH	[illegible]	[illegible]
PANEL "K"	3'-4	± 1/8"
OVERALL LENGTH	59'-0 3/4"	± 3/8"
WEB DEPTH	31 7/8"	±

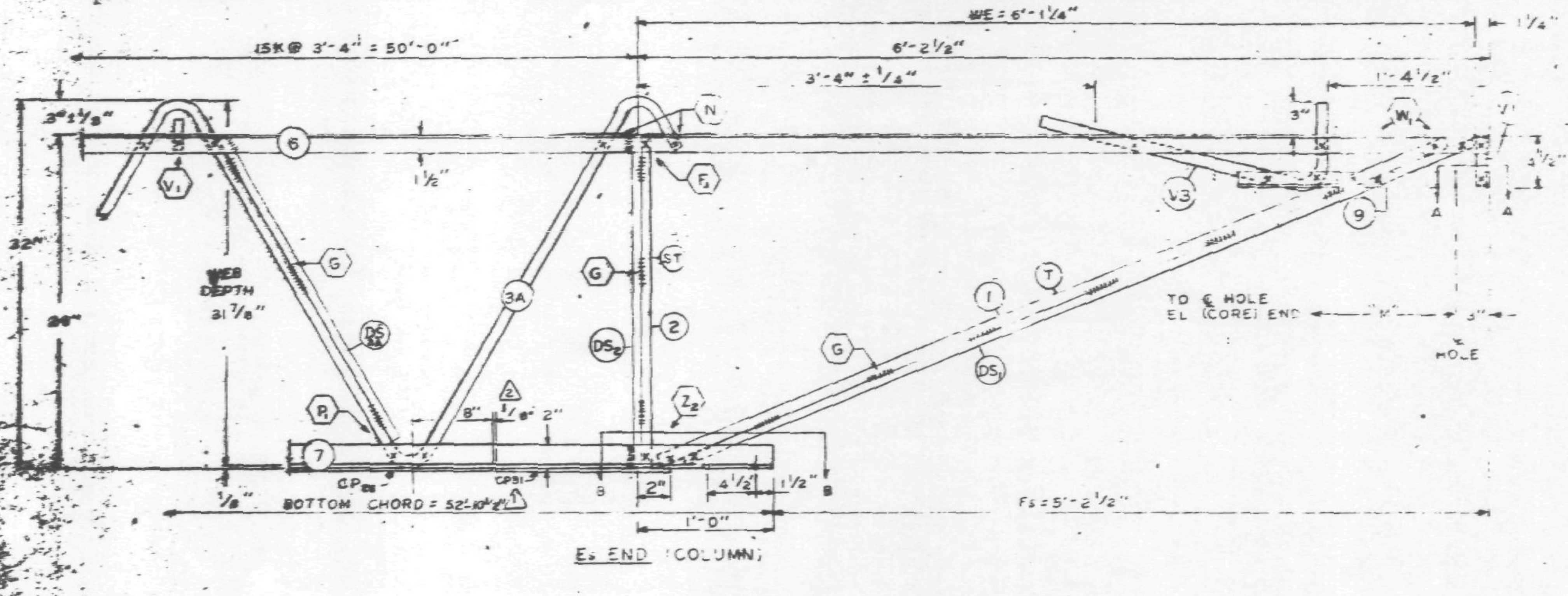

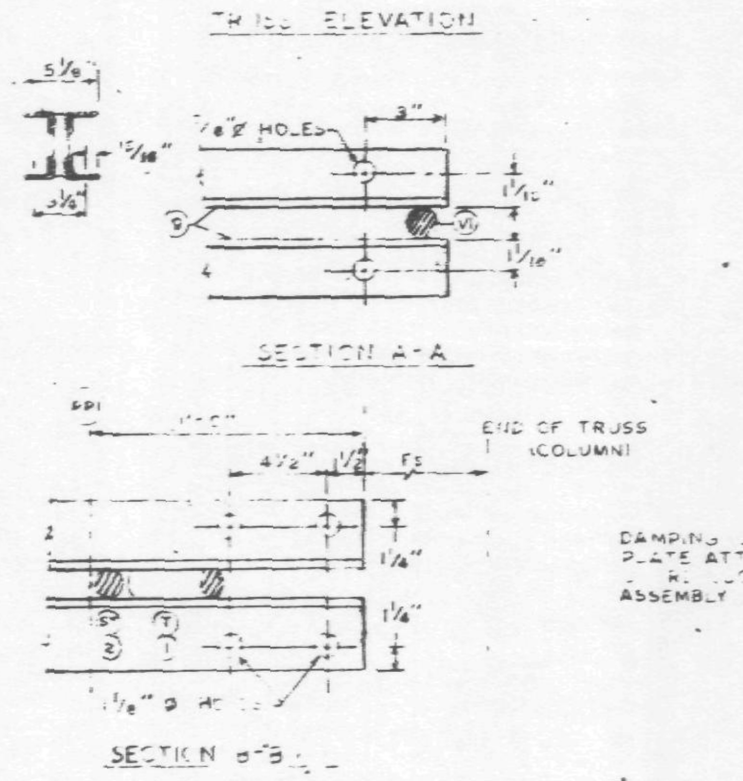

ALL PANEL POINTS RESISTANCE WELDED (x)
ARC WELDS INDICATED AT SHADED AREAS
AND AT BOTTOM CHORD WEB SPLICES
ALL WELD DETAILS SHOWN ON SHEETS ST290, ST291, ST292, ST293, AND ST287.

CHORD PLATE DETAILS SHOWN ON SHEET ST288.
SEE SHEET ST295 FOR V1 & V3 DETAILS
LETTERS IN HEXAGON INDICATE WELD DETAILS, ie. (A)
LETTERS AND NUMBERS IN SQUARES INDICATE RESISTANCE WELD STRENGTH IDENTIFIED IN THE QUALITY CONTROL PROGRAM, ie. [R-1]

DAMPING UNIT CONNECTION PLATE ATTACHED TO BOTTOM CHORD ... IN FIELD ASSEMBLY BY CONTRACT W.T.C. 223.00.

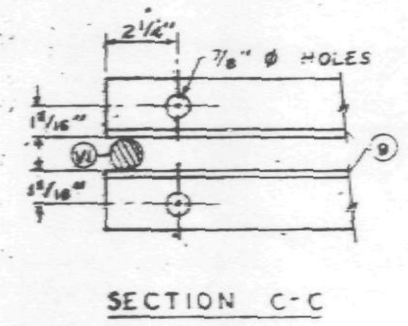

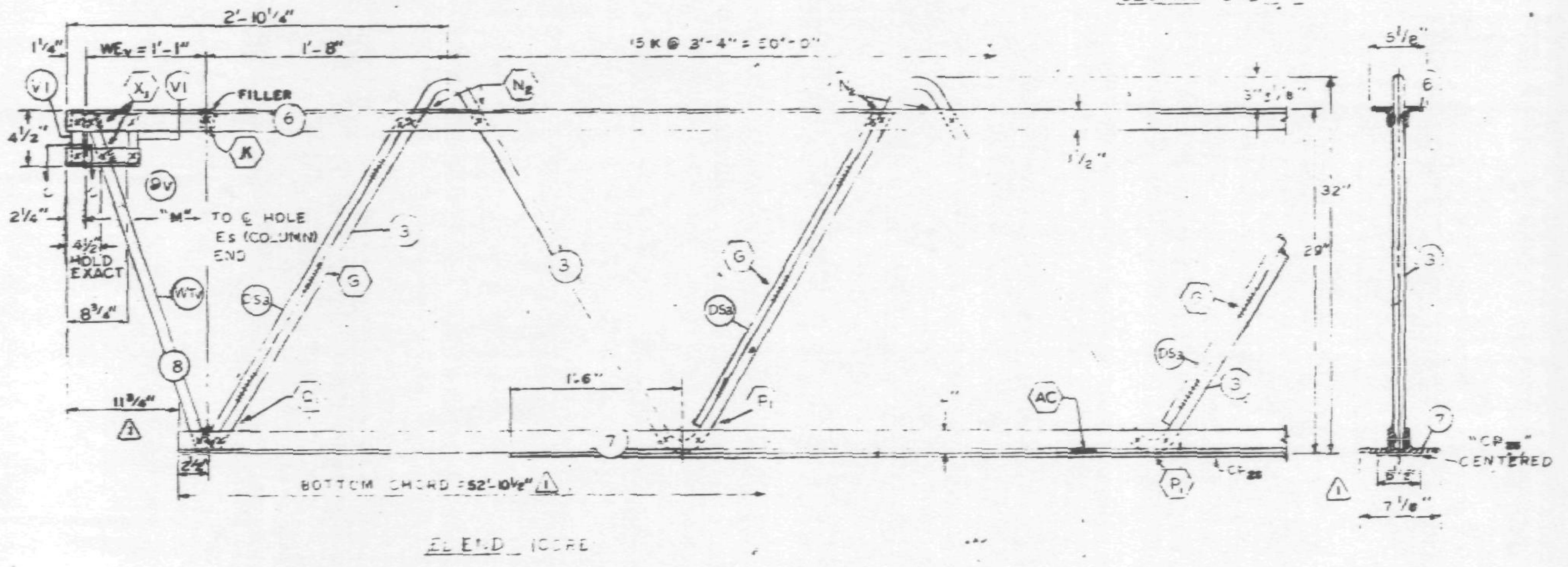

NO.	DATE	REVISION	BY
2	2-18-69	AS NOTED	T.M.C.
1	1-31-69	AS NOTED	G.D.C.

REF. DRWG.

7-ABI-34	1-8-69
7-ABI-52	2-15-69
7-AB4-14	1-3-68
7-ABI-54	11-25-68
7-ABI-53	7-22-68
7-AB3-70	11-25-68

PAINT
LACLEDE ELECTROCOAT
RED NO 10001

TRUSS DESIGNATION	TOP CHORD TWO ANGLES				BOTTOM CHORD TWO ANGLES				MAIN WEB "X"					FILLER		CONNECTION FILLER			CHORD PLATE				"WA" ANGLES
	MK	TYPE STEEL	CHORD SIZE	LENGTH	MK	TYPE STEEL	CHORD SIZE	LENGTH	MK	TYPE STEEL	DIA	LENGTH	NO. OF ...		DIA	NO	DIA	LENGTH	MK	TYPE STEEL	SIZE	LENGTH	
C32T38-59075	6	A242	2"x1½"x.37	59'-0¾"	7	A36	3"x2"x.37"	52'-10½"	3 / 3A	A242 / A242	1.14 / 1.14	56'-0¾" / 40-11⅞"	9K @ 3'-4" = 30'-0" / 6½K @ 3'-4" = 21'-8"	2	.14	4	.14	0'-3"	CP	A36	6½x½	48'-10"	[illegible]

COLUMN END

Es END TRUSS DESIGNATION	BEARING ANGLES				WE	WEB ...				VERTICAL ... STRUT				END ...						DOUBLE STRUT				DOUBLE STRUT				DOUBLE STRUT				CHORD PLATE			
	MK	TYPE STEEL	CHORD SIZE	LENGTH		MK	TYPE STEEL	DIA	LENGTH	MK	TYPE STEEL	DIA	LENGTH	TYPE STEEL	DIA	LENGTH			LENGTH	MK	TYPE STEEL	DIA	LENGTH	MK	TYPE STEEL	DIA	LENGTH (3 REQ'D)	MK	TYPE STEEL	DIA	LENGTH	MK	TYPE STEEL	SIZE	LGTH
C32T38-59075	9	A242	2"x1½"x.37	1'-10"	6'-1¼"		A242	.14	6'-3⅛"		A242	1.14	0'-4⅞"	A242	1.14	0'-4⅞"	A242		¼"	DS1	A242	1.14	6'-3' 8"	DS2A	A242	.92	2'-6¾"	DS2	A242	.75	2'-4⅞"	CP	A36	6½x.50	1'-1⅞"

CORE END

EL END TRUSS DESIGNATION	BEARING ANGLE				WEv	DOUBLE STRUT				DOUBLE STRUT			END STIFFENER MK. V1			WEB "WCV"					WEB "WTV"				
	MK	TYPE STEEL	CHORD SIZE	LENGTH		MK	TYPE STEEL	DIA	LENGTH (3 REQ'D)	TYPE STEEL	DIA	LENGTH	TYPE STEEL	DIA	LENGTH (2 REQ'D)	MK	TYPE STEEL		DIA	LENGTH	MK	TYPE STEEL		DIA	LENGTH
C32T38-59075	9V	A242	2"x1½"x.37"	0'-10"	1'-1"	DS2	A242	1.14	2'-6¾"	—	—	—	A242	1.14	4⅜"	—	—	—	—	—	8	A242	1	1.14	2'-6¼"

CHECK DIMENSION FOR TRUSS FAB.

LOCATION OF TRANS. TRUSS				
CL-1	CL-2	CL-3	CL-4	Fs
9'-6½"	22'-10½"	36'-2½"	49'-6½"	5'-2½"

STEEL TRUSS DETAILS
FOR
WORLD TRADE CENTER - N.Y.C.
FOR
THE PORT OF NEW YORK AUTHORITY

FLOOR TRUSS C32T38 59'-0¾" OVERALL
WORLD TRADE CENTER TOWERS A-B

FABRICATION BY LACLEDE STEEL COMPANY

FABRICATED AT MADISON, ILLINOIS	DESIGN DRAWING NO. 7-ABI-34	PLATE
APPROVED FOR FABRICATION FOR P.O.N.Y.A. DATE	DRAWN BY:	DATE JAN. 21, 1969
APPROVED FOR FABRICATION BY FOR FABRICATOR DATE	CHECKED BY: T.M.CHURA DATE JAN. 21, 1969	IN CHARGE OF PROD. DEV.
DETAILED BY LACLEDE STEEL CO.	FABRICATION CONT. NO. W.T.C. 221	SHEET NO. ST 238

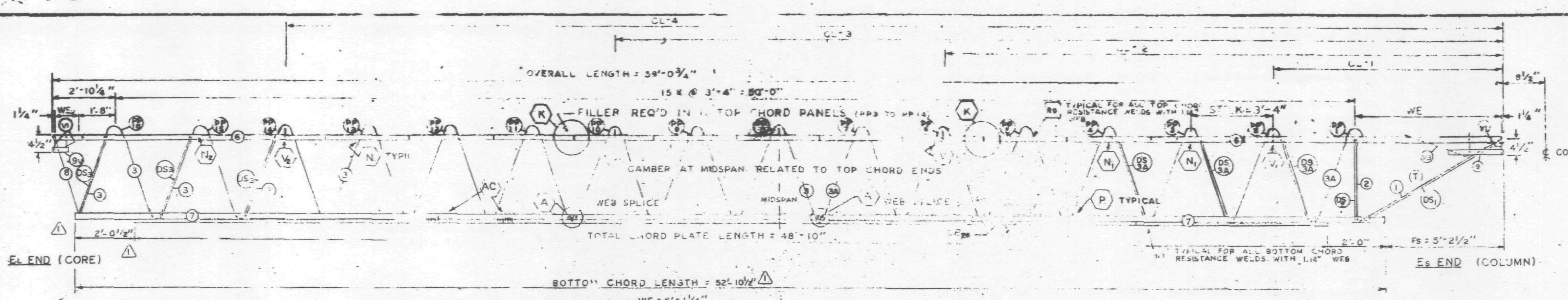

FABRICATION REQUIREMENTS

	DESIGN	TOLERANCE
CAMBER AT MIDSPAN	2 1/8"	± 3/8"
DESIGN DEPTH	29"	± 1/4"
PANEL "K"	3'-4	± [illegible]
OVERALL LENGTH	5[illegible]	± 3/8"
WEB DEPTH	31 [illegible]/8"	± 1/

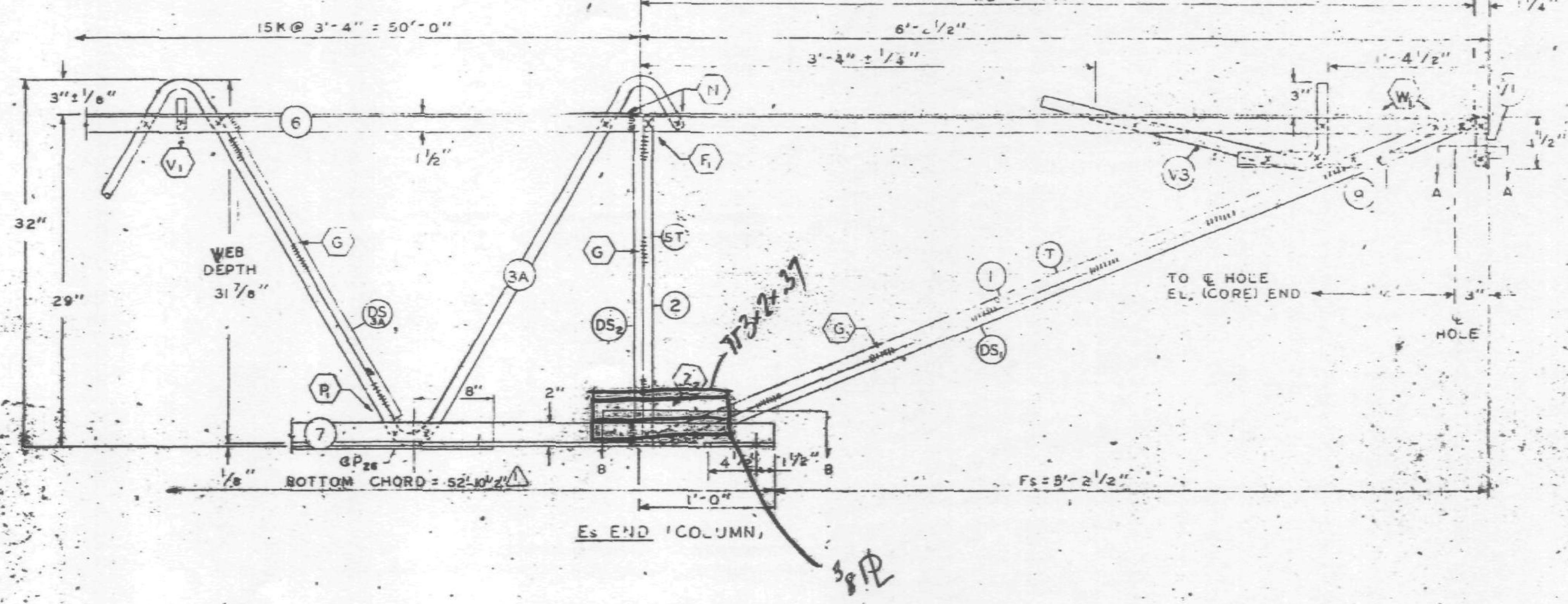

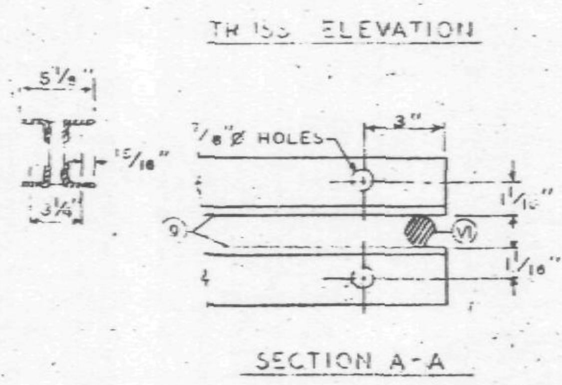

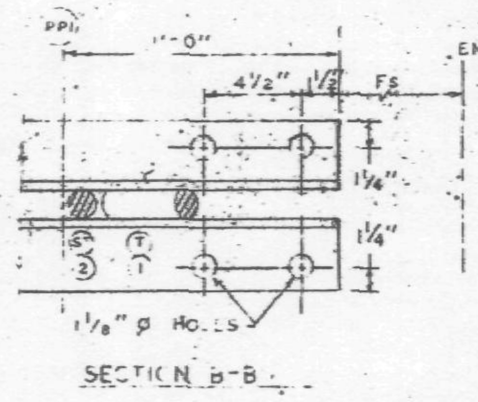

ALL PANEL POINTS RESISTANCE WELDED (X)
ARC WELDS INDICATED AT SHADED AREAS AND AT BOTTOM CHORD WEB SPLICES
ALL WELD DETAILS SHOWN ON SHEETS ST290, ST291, ST292, ST293, AND ST288.

CHORD PLATE DETAILS SHOWN ON SHEET ST288.
SEE SHEET ST295 FOR V1 & V3 DETAILS
LETTERS IN HEXAGON INDICATE WELD DETAILS, ie. (A)
LETTERS AND NUMBERS IN SQUARES INDICATE RESISTANCE WELD STRENGTH IDENTIFIED IN THE QUALITY CONTROL PROGRAM, ie., [R-1]

DAMPING UNIT CONNECTION PLATE ATTACHED TO BOTTOM CHORD (COL END) IN FIELD ASSEMBLY BY CONTRACT W.T.C. 228.00.

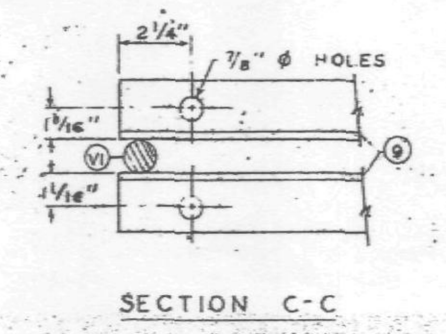

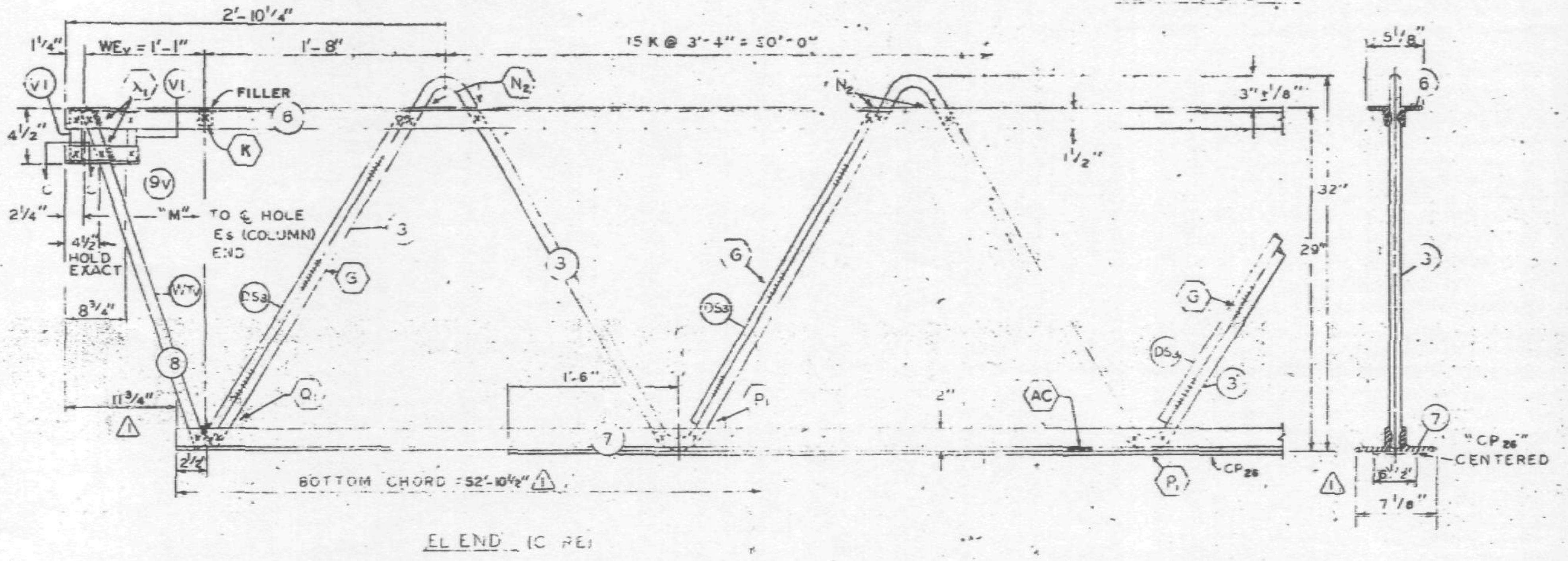

NO.	DATE	REVISION	BY
1	1-31-69	AS NOTED	G.D.C.

REF. DRWG.

7-ABI-34	1-6-68
7-ABI-52	2-15-68
7-AB4-14	1-3-68
7-ABI-54	11-25-68
7-ABI-53	7-22-68
7-AB3-70	11-25-68

PAINT

LACLEDE ELECTROCOAT
RED NO. 10001

TRUSS DESIGNATION	TOP CHORD TWO ANGLES MK	TYPE STEEL	CHORD SIZE	LENGTH	BOTTOM CHORD TWO ANGLES MK	TYPE STEEL	CHORD SIZE	LENGTH	MAIN WEB "W" MK	TYPE STEEL	DIA	LENGTH	NO. OF K	FILLER NO.	DIA	CONNECTION FILLER NO.	DIA	LENGTH	CHORD PLATE MK	TYPE STEEL	SIZE	LENGTH	"A" ⅞ HOLES
C32T38-59075	6	A242	2"x1½"x.37	59'-0¾"	7	A36	3"x2"x.37"	52'-10½"	3	A242	1.14	56'-0¾"	9K @ 3'-4" = 30'-0"	2	1.14	4	1.14	0'-3"	CP26	A36	6½"x½"	48'-10"	[illegible]
									3A	A242	1.14	40'-11¼"	6½K @ 3'-4" = 21'-8"										

COLUMN END	TRUSS DESIGNATION	BEARING ANGLES MK	TYPE STEEL	CHORD SIZE	LENGTH	WE	DIAGONAL "A" STRUT MK	TYPE STEEL	DIA.	LENGTH	VERTICAL "ST" STRUT MK	TYPE STEEL	DIA.	LENGTH	END STIFFENER MK. V1 TYPE STEEL	DIA.	LENGTH	MK. V3 TYPE STEEL	DIA.	LENGTH	DOUBLE STRUT MK.	TYPE STEEL	DIA.	LENGTH	DOUBLE STRUT MK.	TYPE STEEL	DIA.	LENGTH (3 REQ'D)	DOUBLE STRUT MK	TYPE STEEL	DIA.	LENGTH
Es END	C32T38-59075	9	A242	2"x1½"x.25	1'-10"	6'-1¼"	1	A242	1.14	6'-3⅛"	2	A242	1.14	[illegible]'-4⅞"	A242	1.14	0'-4⅜"	[illegible]	1.14	2'-9½"	DS1	A242	1.14	6'-3⅛"	DS3A	A242	.92	2'-6¾"	DS2	A242	.75	2'-4⅞"

CORE END	TRUSS DESIGNATION	BEARING ANGLE MK	TYPE STEEL	CHORD SIZE	LENGTH	WEv	DOUBLE STRUT MK	TYPE STEEL	DIA	LENGTH (3 REQ'D)	DOUBLE STRUT MK	TYPE STEEL	DIA	LENGTH	END STIFFENER MK. V1 TYPE STEEL	DIA	LENGTH (2 REQ'D)	WEB "WCV" MK	TYPE STEEL	[illegible]	[illegible]	LENGTH	WEB "WTV" MK	TYPE STEEL	[illegible]	DIA	LENGTH
EL END	C32T38-59075	9V	A242	2"x1½"x.37"	0'-10"	1'-1"	DS3A	A242	1.14	2'-6¾"	—	—	—	—	A242	1.14	4⅞"	—	—	—	—	—	8	A242	1	1.14	2'-6[illegible]"

CHECK DIMENSION FOR TRUSS FAB.

LOCATION OF TRANS. TRUSS				
CL-1	CL-2	CL-3	CL-4	Fs
9'-6½"	22'-10½"	36'-2½"	49'-6½"	5'-2½"

SKILLING - HELLE CHRISTIANSEN - ROBERTSON
Structural & Civil Engineers
X APPROVED AS NOTED
2/19/69 SK

STEEL TRUSS DETAILS
FOR
WORLD TRADE CENTER - N.Y.C.
FOR
THE PORT OF NEW YORK AUTHORITY

FLOOR TRUSS C32T38 59'-0¾" OVERALL
WORLD TRADE CENTER TOWERS A-B

FABRICATION BY LACLEDE STEEL COMPANY

FABRICATED AT MADISON, ILLINOIS		DESIGN DRAWING NO. 7-ABI-34	PLATE
APPROVED FOR FABRICATION BY FOR P.O.N.Y.A.	DATE	DRAWN BY dee DATE JAN. 21, 1969	
APPROVED FOR FABRICATION BY FOR FABRICATOR LACLEDE STEEL CO.	DATE	CHECKED BY T.M. CHURA DATE JAN. 21, 1969	IN CHARGE OF PROD. DEV.
DETAILED BY A. CARL WEBER		FABRICATION CONT. NO. W.T.C. 221	SHEET NO. ST 238

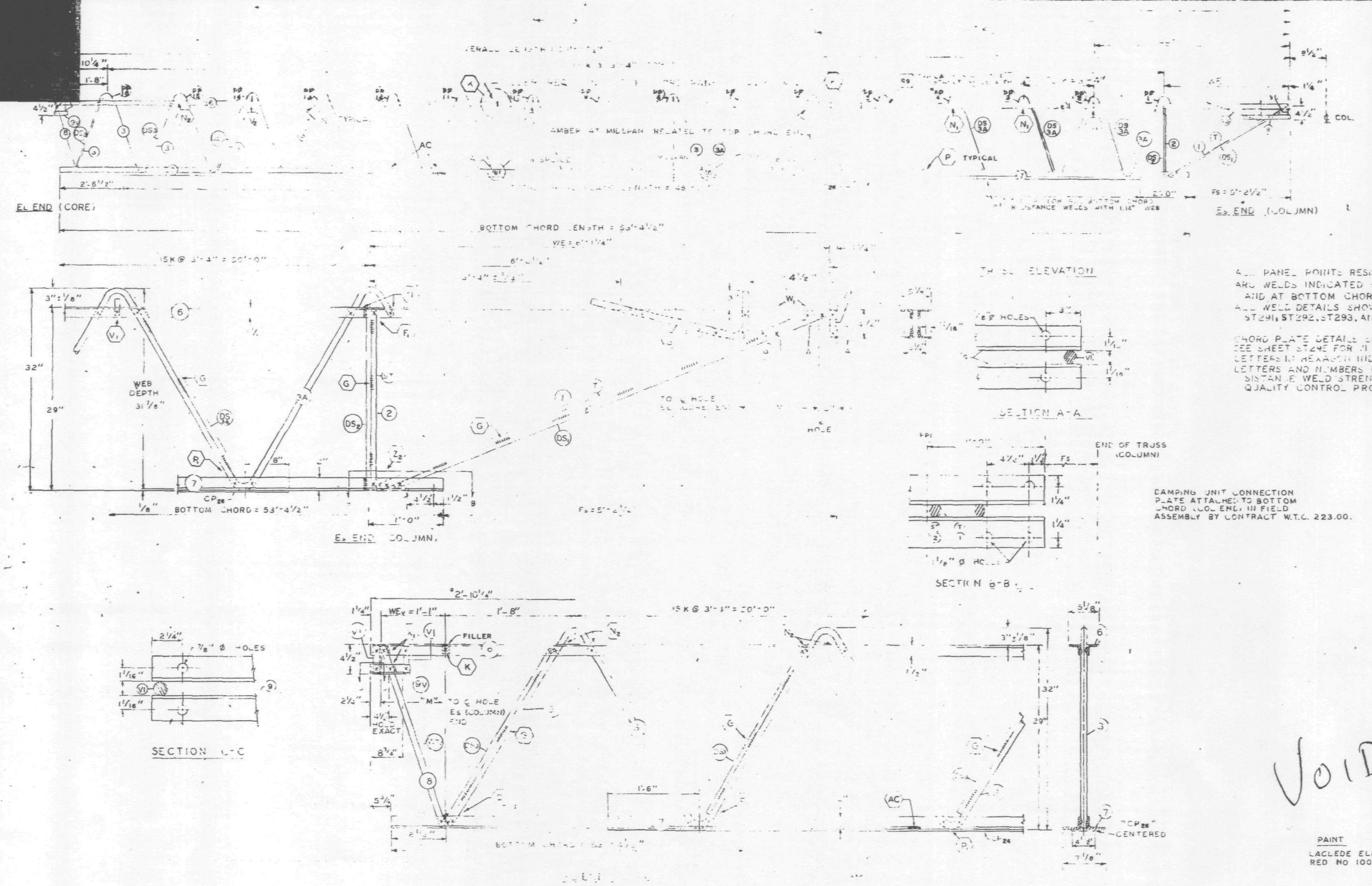

ALL PANEL POINTS RESISTANCE WELDED (X)
ARC WELDS INDICATED AT SHADED AREAS AND AT BOTTOM CHORD WEB SPLICES
ALL WELD DETAILS SHOWN ON SHEETS ST290, ST291, ST292, ST293, AND ST288.

CHORD PLATE DETAILS SHOWN ON SHEET ST288.
SEE SHEET ST295 FOR V1 & V3 DETAILS
LETTERS IN HEXAGON INDICATE WELD DETAILS, i.e., (A)
LETTERS AND NUMBERS IN SQUARES INDICATE RESISTANCE WELD STRENGTH IDENTIFIED IN THE QUALITY CONTROL PROGRAM, i.e., [R-1]

DAMPING UNIT CONNECTION PLATE ATTACHED TO BOTTOM CHORD (COL END) IN FIELD ASSEMBLY BY CONTRACT W.T.C. 223.00.

FABRICATION REQUIREMENTS

	DESIGN	TOLERANCE
CAMBER AT MIDSPAN	2 1 8"	± 3/8"
DESIGN DEPTH	29"	± 1/
PANEL K"	3'-4"	± 1/4"
OVERALL LENGTH	59'-0¾	± 3/8"
WEB DEPTH	31	± 1/4"

NO.	DATE	REVISION	BY

REF. DRWG.

7-AB1-34	1-6-68
7-AB1-52	2-15-68
7-AB4-14	1-3-68
7-AB1-54	11-25-68
7-AB1-53	7-22-68
7-AB3-70	11-25-68

PAINT

LACLEDE ELECTROCOAT
RED NO 10001

CHECK DIMENSION FOR TRUSS FAB.

LOCATION OF TRANS. TRUSS				
CL-1	CL-2	CL-3	CL-4	Fs
9'-6½"	22'-10½"	36'-2½"	49'-6½"	5'-2½"

DOUBLE STRUT				DOUBLE STRUT				DOUBLE STRUT			
MK.	TYPE STEEL	DIA.	LENGTH	MK.	TYPE STEEL	DIA.	LENGTH (3 REQ'D)	MK.	TYPE STEEL	DIA.	LENGTH
DS_1	A242	1.14	6'-3⅛"	DS_{3A}	A242	.92	2'-6¾"	DS_2	A242	.75	2'-4⅞"

STEEL TRUSS DETAILS
FOR
WORLD TRADE CENTER – N.Y.C.
FOR
THE PORT OF NEW YORK AUTHORITY

FLOOR TRUSS C32T38 59'-0¾" OVERALL
WORLD TRADE CENTER TOWERS A-B

FABRICATION BY LACLEDE STEEL COMPANY

FABRICATED AT MADISON, ILLINOIS	DESIGN DRAWING NO. 7-AB1-34	PLATE
APPROVED FOR FABRICATION DATE FOR P.O.N.Y.A.	DRAWN BY dee DATE JAN 21, 1969	
APPROVED FOR FABRICATION DATE FOR FABRICATOR	CHECKED BY T.M. CHURA DATE JAN 21, 1969	IN CHARGE OF PRO. DIV.
LACLEDE STEEL CO. DETAILED BY A. CARL WEBER	FABRICATION CONT. NO. W.T.C. 221	SHEET NO. ST 238

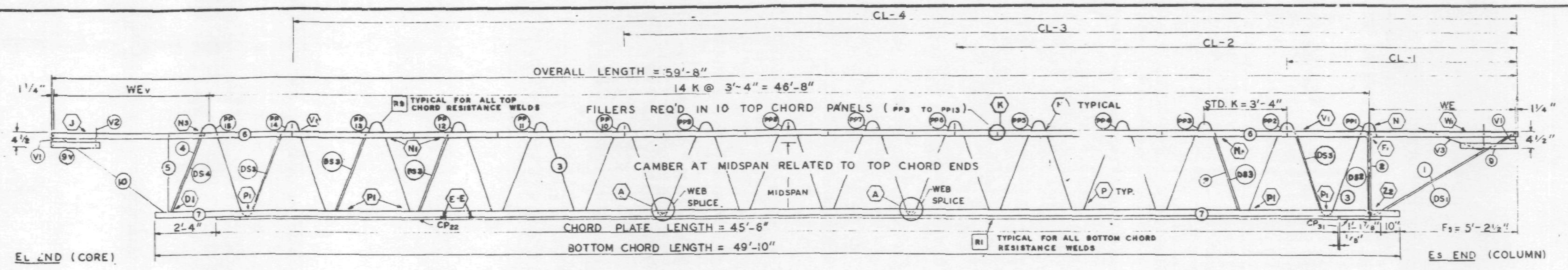

FABRICATION REQUIRMENTS	DESIGN	TOLERANCE
CAMBER AT MIDSPAN	2"	± 3/8"
DESIGN DEPTH	29"	± 1/4"
PANEL "K"	3'-4"	± 1/4"
OVERALL LENGTH	59'-8"	± 3/8"
WEB DEPTH	31 7/8"	± 1/4"

TRUSS ELEVATION

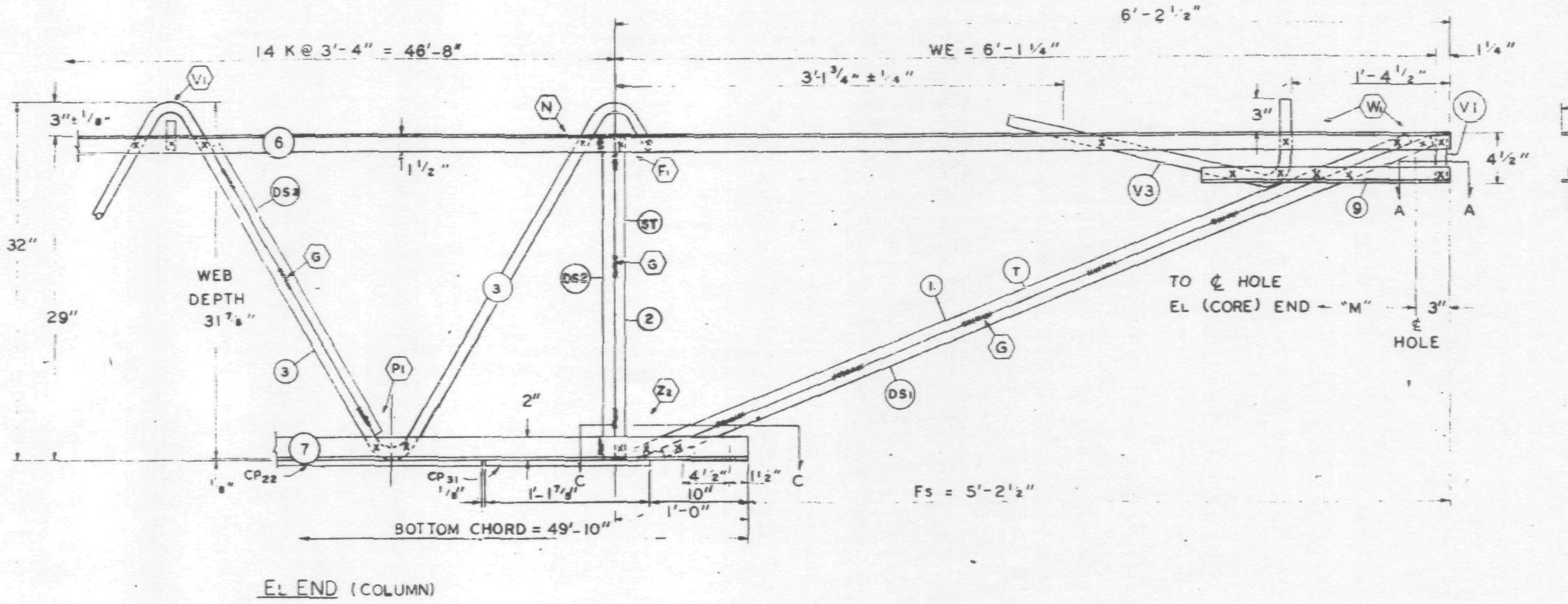

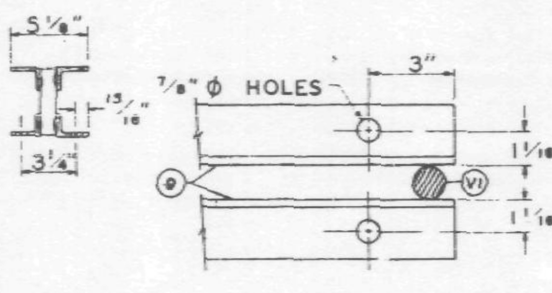

SECTION A-A

ALL PANEL POINTS RESISTANCE WELDED (X)
ARC WELDS INDICATED AT SHADED AREAS AND AT BOTTOM CHORD WEB SPLICES
ALL WELD DETAILS SHOWN ON SHEETS ST290 – ST294 AND ST286.
SEE SHEET ST295 FOR V1, V2, V3, DETAILS
LETTERS IN HEXAGON INDICATE WELD DETAILS i.e. (A)
LETTERS AND NUMBERS IN SQUARES INDICATE RESISTANCE WELD STRENGTH IDENTIFIED IN THE QUALITY CONTROL PROGRAM i.e. [R1]

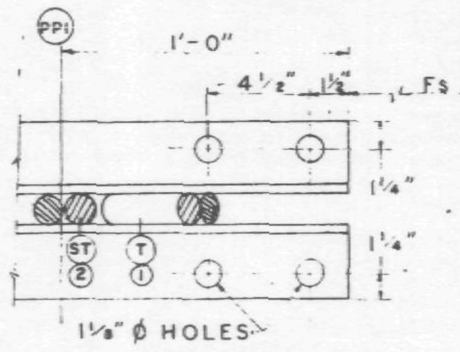

SECTION C-C

DAMPING UNIT CONNECTION PLATE ATTACHED TO BOTTOM CHORD (COL. END) IN FIELD. ASSEMBLY BY OTHERS.

SKILLING-HELLE-CHRISTIANSEN-ROBERTSON
APPROVED AS NOTED
6/4/69

VOID

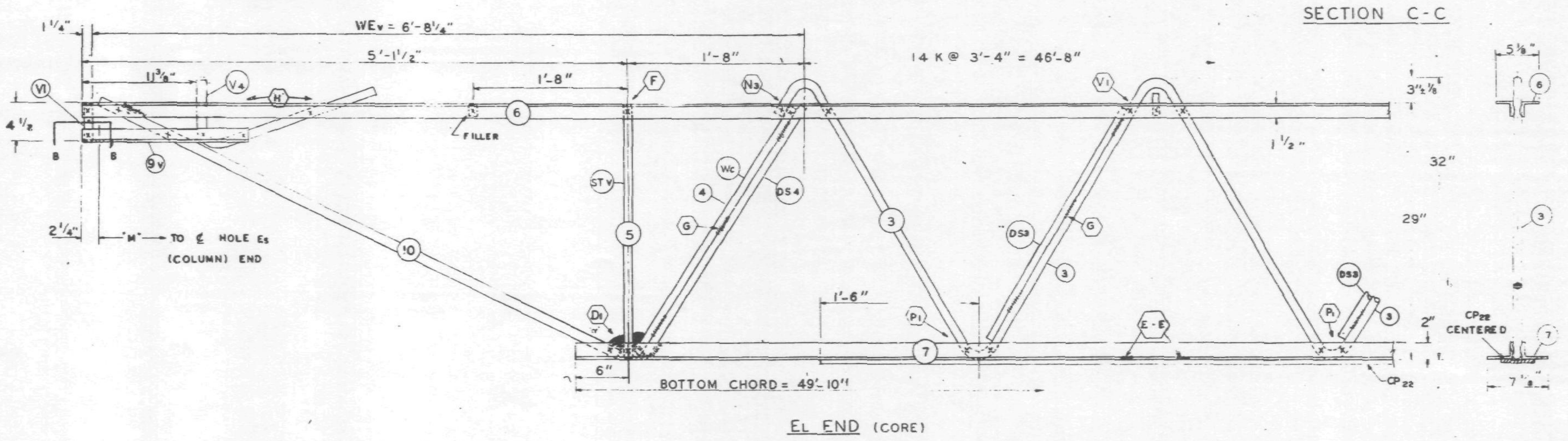

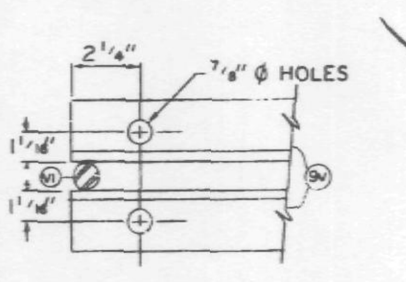

SECTION B-B

NO.	DATE	REVISION	BY

Truss length not reqd

REF DRWG.		
	7-AB1-35	1-6-67
	7-AB4-50	8-1-68
	7-AB3-41	1-6-69
	7-AB1-53	7-22-68

PAINT
LACLEDE ELECTROCOAT
RED NO. 10001

TRUSS DESIGNATION	TOP CHORD TWO ANGLES MK.	TYPE STEEL	CHORD SIZE	LENGTH	BOTTOM CHORD TWO ANGLES MK.	TYPE STEEL	CHORD SIZE	LENGTH	MAIN WEB "W" MK.	TYPE STEEL	DIA.	LENGTH	NO. OF K	FILLER NO.	DIA.	"M" C/C HOLES	CONNECTION FILLERS NO	DIA.	LENGTH	CHORD PLATE MK	TYPE STEEL	SIZE	LENGTH	DOUBLE STRUT MK	TYPE STEEL	DIA	LENGTH	CHORD PLATE MK.	TYPE STEEL	SIZE	LENGTH
C32T39C 598	6	A242	2"x1½"x37	59'-8"	7	A36	3"x2"x37	49'-10"	3	A242	1.14	88'-1¼"	14 @ 3'-4" = 46'-8"	11	1.14	59'-2¾"	4	1.14	3"	CP22	A36	6½"x½"	45'-6"	DS2	A242	.75	2'-4'	CP31	A36	6½"x½"	1'-1⅞"

COLUMN END

Es END TRUSS DESIGNATION	BEARING ANGLES MK.	TYPE STEEL	CHORD SIZE	LENGTH	WE	DIAGONAL "T" STRUT MK	TYPE STEEL	DIA	LENGTH	VERTICAL "ST" STRUT MK.	TYPE STEEL	DIA.	LENGTH	END STIFFENER MK. V1 TYPE STEEL	DIA.	LENGTH	MK. V3 TYPE STEEL	DIA.	LENGTH	DOUBLE STRUT MK	TYPE STEEL	DIA	LGTH.
C32T39C-598	9	A242	2"x1½"x.37	2'-3"	6'-1¼"	1	A242	1.14	6'-3⅛"	2	A242	1.14	2'-4⅞"	A242	1.14	4⅜"	A242	1.14	2'-9½"	DS1	A242	1.14	6'-3½"

CHECK DIMENSION FOR TRUSS FAB. LOCATION OF TRANS. TRUSS CL-1	CL-2	CL-3	CL-4	Fs
9'-6½"	22'-10½"	36'-2½"	49'-6½"	-2½"

CORE END

EL END TRUSS DESIGNATION	BEARING ANGLES MK.	TYPE STEEL	CHORD SIZE	LENGTH	WEv	DIAGONAL "Tv" STRUT MK	TYPE STEEL	DIA	LENGTH	VERTICAL "STv" STRUT MK.	TYPE STEEL	DIA.	LENGTH	END STIFFENER MK. V1 TYPE STEEL	DIA	LENGTH	MK. V2 TYPE STEEL	DIA.	LENGTH	MK. V4 TYPE STEEL	DIA.	LENGTH	WEB "Wc" MK	TYPE STEEL	PCS	DIA	LENGTH	DOUBLE STRUT MK.	TYPE STEEL	DIA	LENGTH	DOUBLE STRUT MK	TYPE STEEL	DIA	LENGTH	(5) DOUBLE (REQD) ST MK	TYPE STEEL		LENGTH
C32T39C-598	9	A242	2"x1½"x.37	1'-6"	6'-8¼	10	A242	1.14	5'-5½"	5	A242	1.14	2'-4⅞"	A242	1.14	4⅜"	—	—	—	A242	1.14	2'-2½"	4	A242	1	1.14	2'-0"	DS4	A242	.75	2'-9½"	—	—	—	—	DS3	A242	.92		2'-6¾"

STEEL TRUSS DETAILS
FOR
WORLD TRADE CENTER - N.Y.C.
FOR
THE PORT OF NEW YORK AUTHORITY

FLOOR TRUSS C32T39C 59'-8" OVERALL
WORLD TRADE CENTER TOWERS A & B

FABRICATION BY: LACLEDE STEEL COMPANY

FABRICATED AT: MADISON, ILLINOIS		DESIGN DRAWING NO. 7-AB1-35	PLATE
APPROVED FOR FABRICATION BY: ______ FOR P.O.N.Y.A.	DATE	DRAWN BY: DATE: MAY 6, 1969	
APPROVED FOR FABRICATION BY: LACLEDE STEEL CO. FOR FABRICATOR	DATE.	CHECKED BY: T.H. DATE: MAY 6, 1969	IN CHARGE OF PROD. DEV.
DETAILED BY: A.C. WEBER		FABRICATION CONT. NO. W.T.C. 221	SHEET NO. ST239C

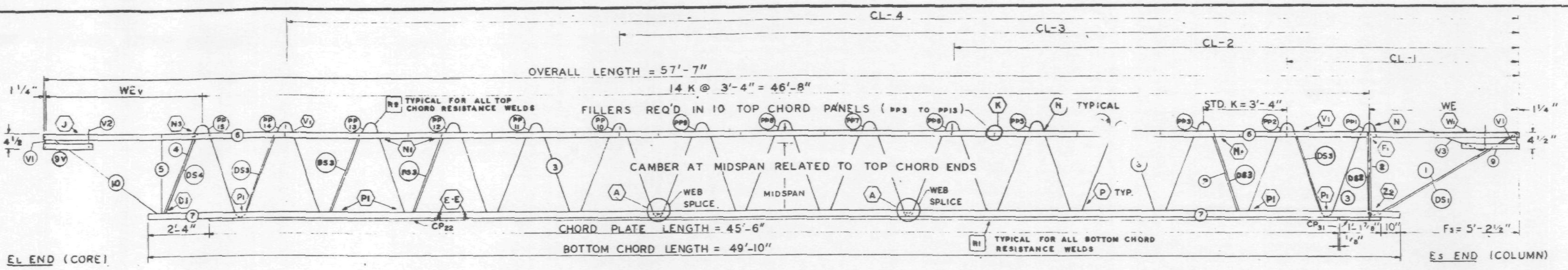

El END (CORE)

Es END (COLUMN)

TRUSS ELEVATION

ALL PANEL POINTS RESISTANCE WELDED (X)
ARC WELDS INDICATED AT SHADED AREAS AND AT BOTTOM CHORD WEB SPLICES
ALL WELD DETAILS SHOWN ON SHEETS ST290 – ST294 AND ST286.
SEE SHEET ST295 FOR V1, V2, V3, DETAILS
LETTERS IN HEXAGON INDICATE WELD DETAILS. ie. (A)
LETTERS AND NUMBERS IN SQUARES INDICATE RESISTANCE WELD STRENGTH IDENTIFIED IN THE QUALITY CONTROL PROGRAM. ie. [R1]

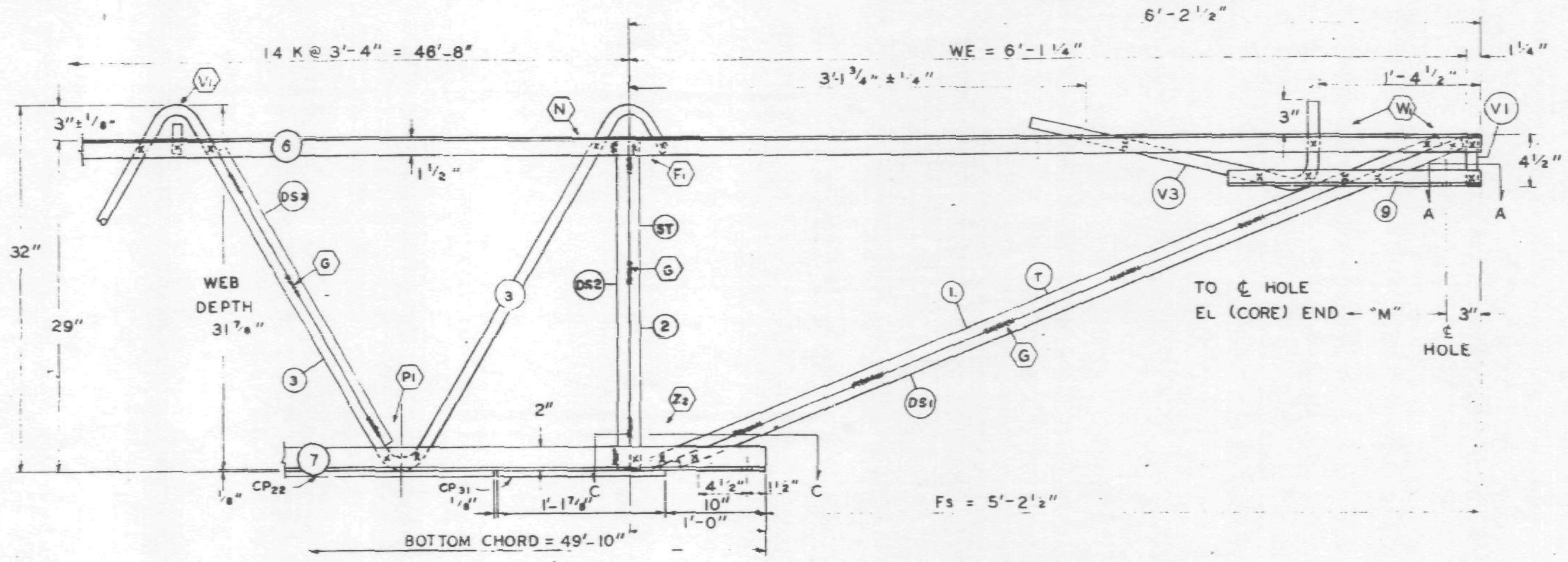

El END (COLUMN)

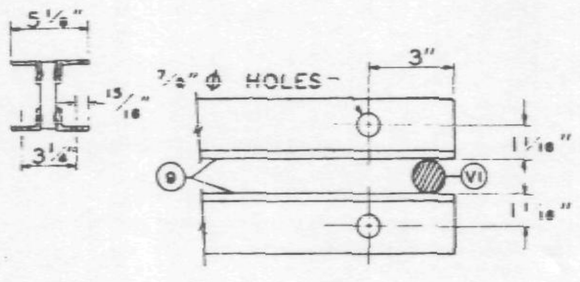

SECTION A-A

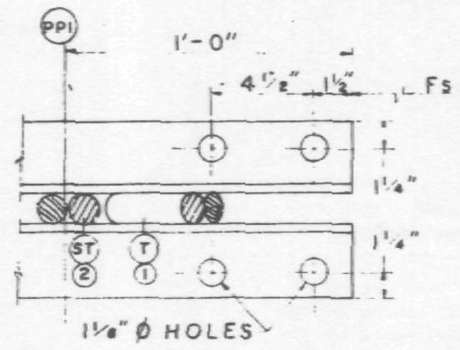

SECTION C-C

DAMPING UNIT CONNECTION PLATE ATTACHED TO BOTTOM CHORD (COL. END) IN FIELD. ASSEMBLY BY OTHERS.

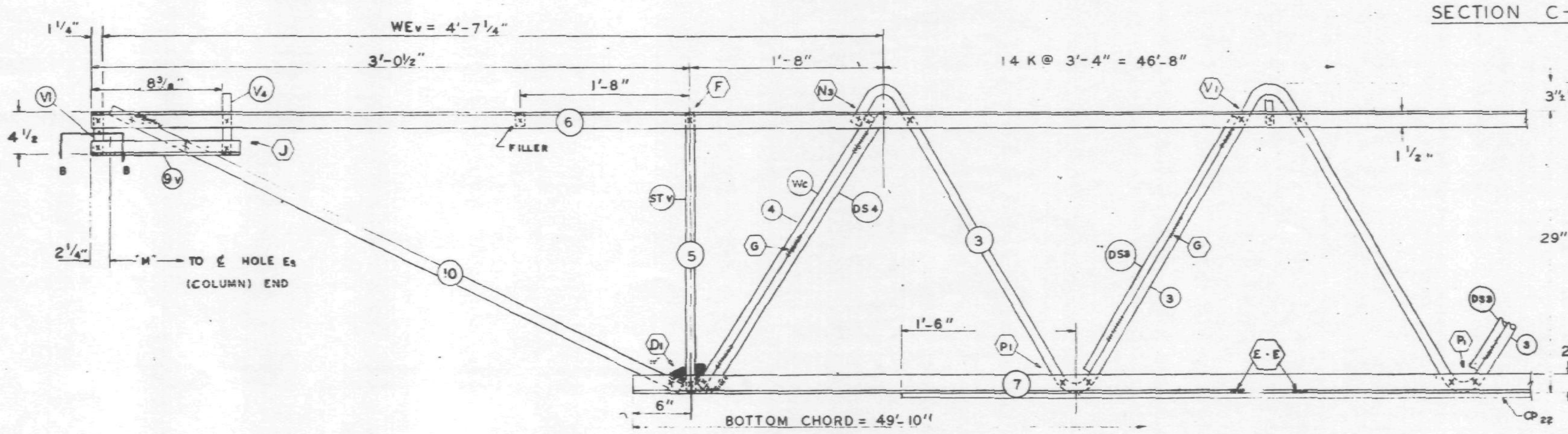

El END (CORE)

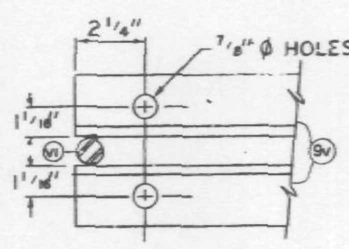

SECTION B-B

FABRICATION REQUIRMENTS	DESIGN	TOLERANCE
CAMBER AT MIDSPAN	2"	± 3/8"
DESIGN DEPTH	29"	± 1/8"
PANEL "K"	3'-4"	± 1/4"
OVERALL LENGTH	57'-7"	± 3/8"
WEB DEPTH	31 7/8"	± 1/4"

SKILLING - HELLE CHRISTIANSEN - ROBERTSON
Structural & Civil Engineers
Date 6/4/69 SK

VOID

NO.	DATE	REVISION	BY

REF DRWG.

7-AB1-35	1-6-67
7-AB4-50	8-1-68
7-AB3-41	1-6-69
7-AB1-53	7-22-68

Truss length not reqd

TRUSS DESIGNATION	TOP CHORD TWO ANGLES				BOTTOM CHORD TWO ANGLES				MAIN WEB "W"					FILLER		"M" C/C HOLES	CONNECTION FILLERS			CHORD PLATE				DOUBLE STRUT				CHORD PLATE			
	MK.	TYPE STEEL	CHORD SIZE	LENGTH	MK.	TYPE STEEL	CHORD SIZE	LENGTH	MK.	TYPE STEEL	DIA.	LENGTH	NO. OF K	NO.	DIA.		NO	DIA.	LENGTH	MK	TYPE STEEL	SIZE	LENGTH	MK	TYPE STEEL	DIA	LENGTH	MK.	TYPE STEEL	SIZE	LENGTH
C32T39P 577	6	A242	2"x1 1/2"x37	57'-7"	7	A36	3"x2"x37	49'-10"	3	A242	1.14	88'-1 1/4"	14 @ 3'-4" = 46'-8"	11	1.14	57'-1 3/4"	4	1.14	3"	CP22	A36	6 1/2"x1/2"	45'-6"	DS2	A242	.75	2'-4 7/8"	CP31	A36	6 1/2"x1/2"	1'-1 7/8"

COLUMN END

Es END	TRUSS DESIGNATION	BEARING ANGLES				WE	DIAGONAL "T" STRUT				VERTICAL "ST" STRUT				END STIFFENER MK. V1			END STIFFENER MK. V3			DOUBLE STRUT			
		MK.	TYPE STEEL	CHORD SIZE	LENGTH		MK	TYPE STEEL	DIA	LENGTH	MK.	TYPE STEEL	DIA.	LENGTH	TYPE STEEL	DIA.	LENGTH	TYPE STEEL	DIA.	LENGTH	MK	TYPE STEEL	DIA	LGTH.
	C32T39P 577	9	A242	2"x1 1/2"x.37	2'-3"	6'-1 1/4"	1	A242	1.14	6'-3 1/8"	2	A242	1.14	2'-4 7/8"	A242	1.14	4 3/8"	A242	1.14	2'-9 1/2"	DS1	A242	1.14	6'-3 1/8"

CHECK DIMENSION FOR TRUSS FAB.

LOCATION OF TRANS. TRUSS				
CL-1	CL-2	CL-3	CL-4	Fs
9'-6 1/2"	22'-10 1/2"	36'-2 1/2"	49'-6 1/2"	5'-2 1/2"

CORE END

El END	TRUSS DESIGNATION	BEARING ANGLES				WEv	DIAGONAL "Tv" STRUT				VERTICAL "STv" STRUT				END STIFFENER MK. V1			END STIFFENER MK. V2			END STIFFENER MK. V4			WEB "Wc"					DOUBLE STRUT				DOUBLE STRUT				(5) DOU[illegible] (REQD)			
		MK.	TYPE STEEL	CHORD SIZE	LENGTH		MK	TYPE STEEL	DIA	LENGTH	MK.	TYPE STEEL	DIA.	LENGTH	TYPE STEEL	DIA.	LENGTH	TYPE STEEL	DIA.	LENGTH	TYPE STEEL	DIA.	LENGTH	MK	TYPE STEEL	PCS	DIA	LENGTH	MK	TYPE STEEL	DIA	LENGTH	MK	TYPE STEEL	DIA	LENGTH	MK	TYPE STEEL	DIA	LENGTH
	C32T39P 577	9	A242	2"x1 1/2"x.37	10 1/4"	4'=7 1/4"	10	A242	1.14	3'-8 1/2"	5	A242	1.14	2'-4 7/8"	A242	1.14	4 3/8"	A242	1.14	7 3/8"	—	—	—	4	A242	1	1.14	2'-9		A242	.75	2'-9 1/2"	–	—	–	—	DS3	A242	.92	2'-[illegible] 3/4"

PAINT
LACLEDE ELECTROCOAT
RED NO. 10001

STEEL TRUSS DETAILS
FOR
WORLD TRADE CENTER - N.Y.C.
FOR
THE PORT OF NEW YORK AUTHORITY

FLOOR TRUSS C32T39P 57'-7" OVERALL
WORLD TRADE CENTER TOWERS A & B

FABRICATION BY: LACLEDE STEEL COMPANY

FABRICATED AT: MADISON, ILLINOIS		DESIGN DRAWING NO. 7-AB1-35	PLATE
APPROVED FOR FABRICATION BY: ______ FOR P.O.N.Y.A.	DATE	DRAWN BY: E.R. DATE: MAY 6, 1969	
APPROVED FOR FABRICATION BY: ______ FOR FABRICATOR	DATE.	CHECKED BY: T.M.CHUNG DATE: MAY 6, 1969	IN CHARGE OF PROD. DEV.
DETAILED BY: [illegible]		FABRICATION CONT. NO. W.T.C. 221	SHEET NO. ST239P

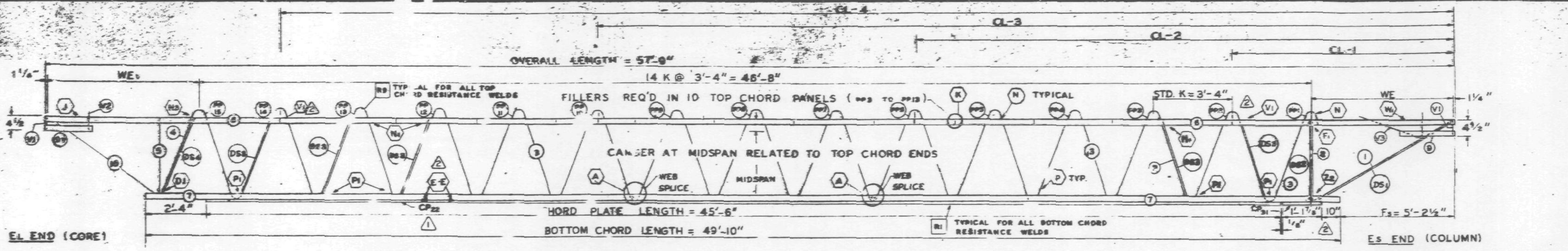

TRUSS ELEVATION

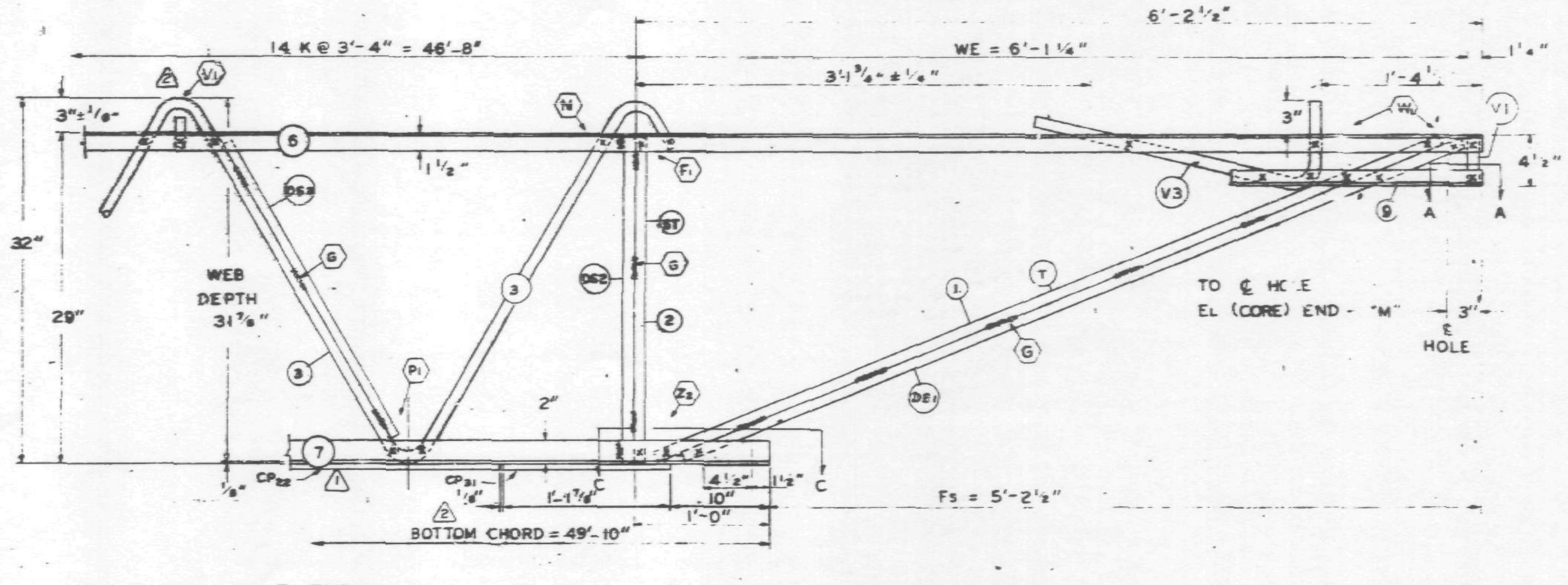

EL END (COLUMN)

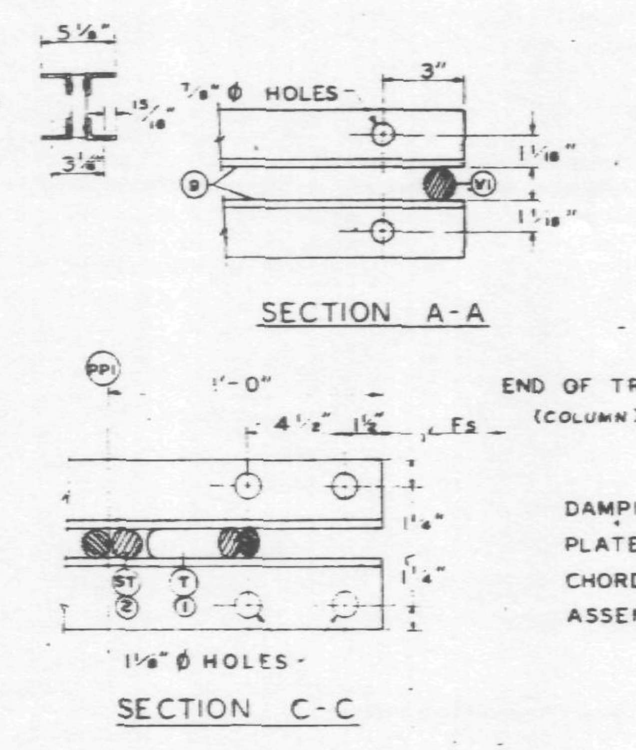

DAMPING UNIT CONNECTION PLATE ATTACHED TO BOTTOM CHORD (COL. END) IN FIELD. ASSEMBLY BY OTHERS.

ALL PANEL POINTS RESISTANCE WELDED (X)
ARC WELDS INDICATED AT SHADED AREAS AND AT BOTTOM CHORD WEB SPLICES
ALL WELD DETAILS SHOWN ON SHEETS ST290 - ST294 AND ST286.
SEE SHEET ST295 FOR V1, V2, V3. DETAILS
LETTERS IN HEXAGON INDICATE WELD DETAILS. ie. (A)
LETTERS AND NUMBERS IN SQUARES INDICATE RESISTANCE WELD STRENGTH IDENTIFIED IN THE QUALITY CONTROL PROGRAM. ie. R1

FABRICATION REQUIREMENTS	DESIGN	TOLERANCE
CAMBER AT MIDSPAN	7"	± 3/8"
DESIGN DEPTH	29"	± 1/4"
PANEL "K"	3'-4"	± 4"
OVERALL LENGTH	57' 9"	± 3/8"
WEB DEPTH	31 7/8"	± 1/4"

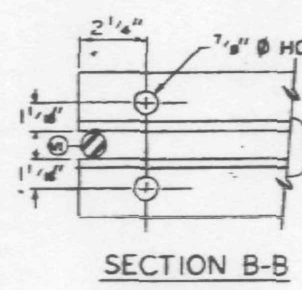

NO.	DATE	REVISION	BY
2	2-18-69	WELD DETAILS... BEARING ANGLE SIZE	L.H.
1	1-31-69	AS NOTED	G.B.C.

REF DRWG.

7-AB1-35	1-8-67
7-AB4-50	8-1-68
7-AB3-41	1-6-69
7-AB1-38	7-22-68

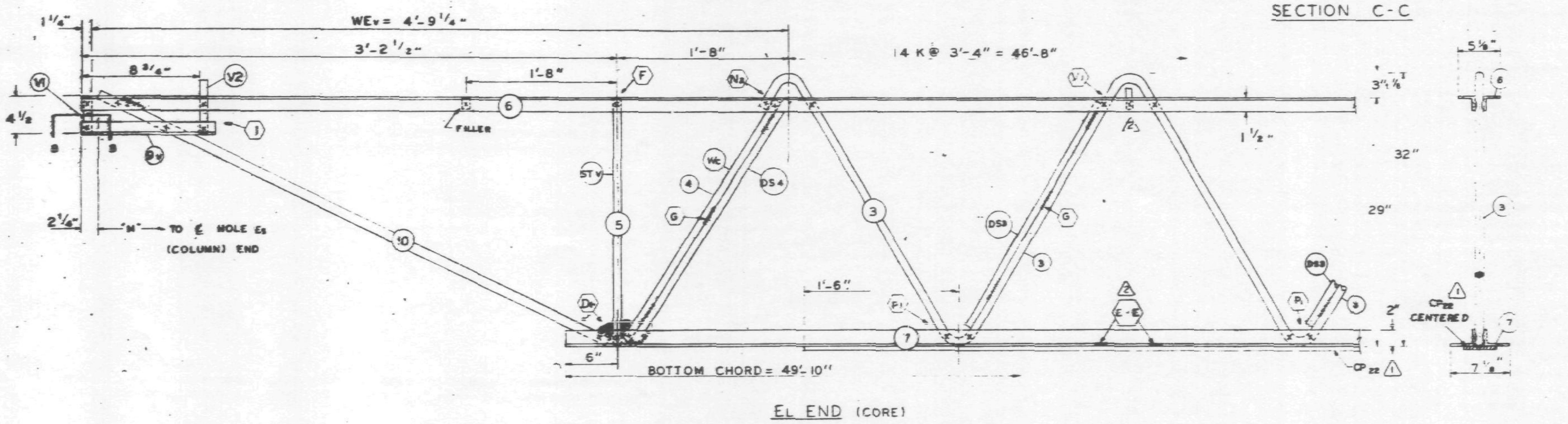

EL END (CORE)

PAINT
LACLEDE ELECTROCOAT
RED NO. 10001

TRUSS DESIGNATION	TOP CHORD TWO ANGLES				BOTTOM CHORD TWO ANGLES				MAIN WEB "W"					FILLER		"M" C/C HOLES	CONNECTION FILLERS (2)			CHORD PLATE				DOUBLE STRUT				CHORD PLATE (2)			
	MK.	TYPE STEEL	CHORD SIZE	LENGTH	MK.	TYPE STEEL	CHORD SIZE	LENGTH	MK.	TYPE STEEL	DIA.	LENGTH	NO. OF K	NO.	DIA.		NO	DIA.	LENGTH	MK	TYPE STEEL	SIZE	LENGTH	MK	TYPE STEEL	DIA.	LENGTH	MK.	TYPE STEEL	SIZE	LENGTH
C32T39N-579	6	A242	2"x1 1/2"x.37	57'-9"	7	A36	3"x2"x.37	49'-10"	3	A242	1.14	88'-1 1/4"	14 @ 3'-4" = 46'-8"	11	1.14	57'-3 3/4"	4	1.14	3"	CP22	A36	6 1/2"x1/2"	45'-6"	DS2	A242	.75	2'-4 7/8"	CP31	A36	6 1/2"x1/2"	1'-1 7/8"

CHECK DIMENSION FOR TRUSS FAB.

LOCATION OF TRANS. TRUSS				
CL-1	CL-2	CL-3	CL-4	Fs
9'-6 1/2"	22'-10 1/2"	36'-2 1/2"	49'-6 1/2"	5'-2 1/2"

COLUMN END

Es END	TRUSS DESIGNATION	BEARING ANGLES (2)				WE	DIAGONAL "T" STRUT				VERTICAL "ST" STRUT				END STIFFENE MK. V1			END STIFFENE MK.			DOUBLE STRUT			
		MK.	TYPE STEEL	CHORD SIZE	LENGTH		MK	TYPE STEEL	DIA	LENGTH	MK.	TYPE STEEL	DIA.	LENGTH	TYPE STEEL	DIA.	LENGTH	TYPE STEEL	DIA.	LENGTH	MK	TYPE STEEL	DIA	LGTH.
	C32T39N-579	9	A242	2"x1 1/2"x.37	2'-3"	6'-1 1/4"	1	A242	1.14	6'-3 1/8"	2	A242	1.14	2'-4 3/8"	A242	1.14	4 3/8"	A242	.4	2'-9 1/2"	S1	A242	1.14	6'-3 1/8"

CORE END

EL END	TRUSS DESIGNATION	BEARING ANGLES (2)				WEv	DIAGONAL "Tv" STRUT (2)				VERTICAL "STv" STRUT				END STIFFENER MK. V1			END STIFFENER MK. V2			END STIFFENER MK. V4			WEB "Wc"					DOUBLE STRUT				DOUBLE STRUT				(5) DOUBLE (REQD) STRUT			
		MK.	TYPE STEEL	CHORD SIZE	LENGTH		MK.	TYPE STEEL	DIA	LENGTH	MK.	TYPE STEEL	DIA.	LENGTH	TYPE STEEL	DIA.	LENGTH	TYPE STEEL	DIA.	LENGTH	TYPE STEEL	DIA.	LENGTH	MK.	TYPE STEEL	PCS	DIA	LENGTH	MK.	TYPE STEEL	DIA	LENGTH	MK	TYPE STEEL	DIA	LENGTH	MK	TYPE STEEL	DIA	LENGTH
	C32T39N-579	9	A242	2"x1 1/2"x.37	10"	4'-9 1/4"	10	A242	1.14	3'-10"	5	A242	1.14	2'-4 7/8"	A242	1.14	4 3/8"	A242	1.14	7 3/8"	—	—	—	4	A242	1	1.14	2'-9 1/2"	DS4	A242	.75	2'-9 1/2"	—	—	—	—	DS3	A242	.92	2'-8 3/4"

STEEL TRUSS DETAILS
FOR
WORLD TRADE CENTER - N.Y.C.
FOR
THE PORT OF NEW YORK AUTHORITY

FLOOR TRUSS C32T39N 57'-9" OVERALL
WORLD TRADE CENTER TOWERS A & B

FABRICATION BY: LACLEDE STEEL COMPANY

FABRICATED AT: MADISON, ILLINOIS		DESIGN DRAWING NO. 7-AB1-35	PLATE
APPROVED FOR FABRICATION BY ___ FOR P.O.N.Y.A.	DATE [illegible]	DRAWN BY: [illegible] DATE: JAN. 20 1969	
APPROVED FOR FABRICATION BY ___ FOR FABRICATOR	DATE	CHECKED BY: [illegible] DATE: JAN. 21, 1969	IN CHARGE OF PROD. DEV.
DETAILED: LACLEDE STEEL CO.		FABRICATION CONT. NO. W.T.C. 221	SHEET NO. ST239N

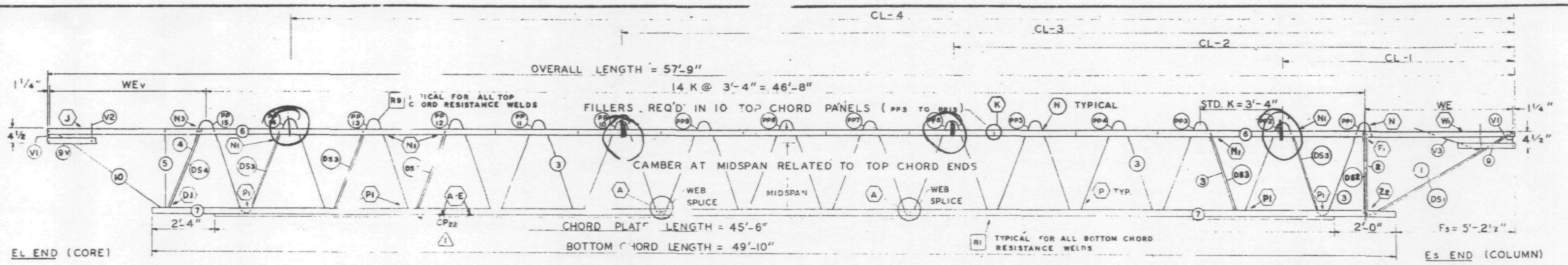

TRUSS ELEVATION

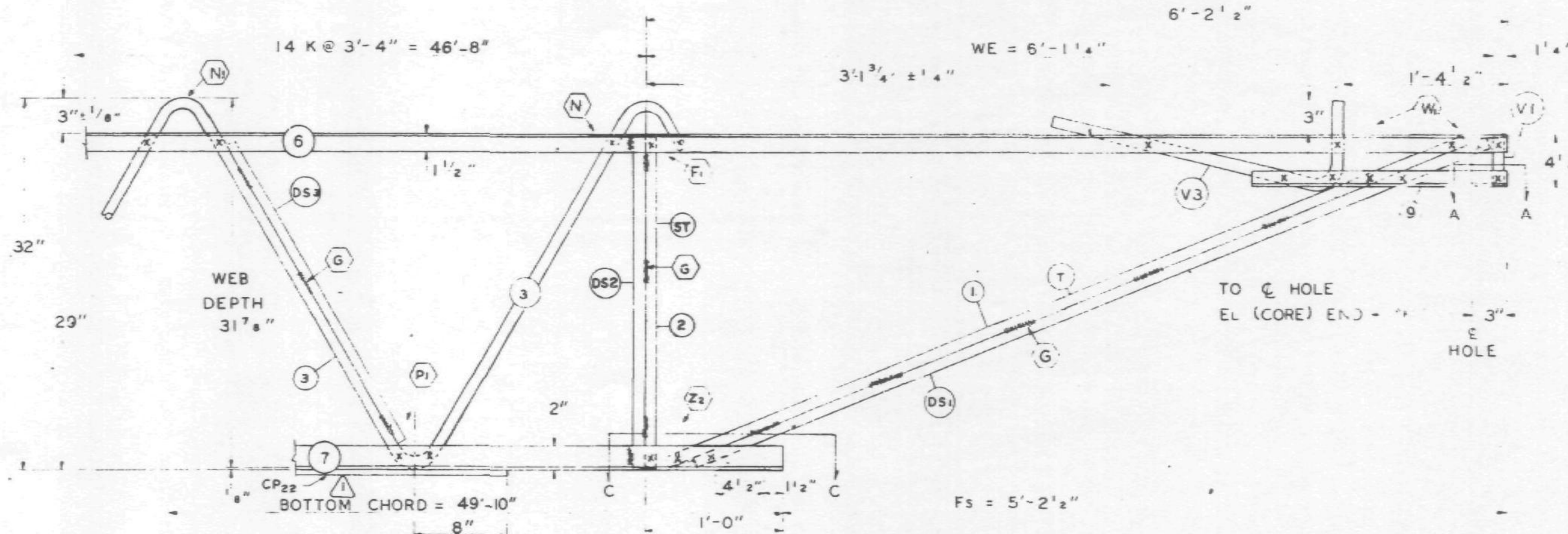

Es END (COLUMN)

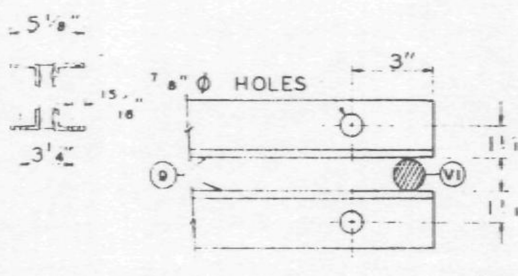

SECTION A-A

ALL PANEL POINTS RESISTANCE WELDED (X)
ARC WELDS INDICATED AT SHADED AREAS AND AT BOTTOM CHORD WEB SPLICES
ALL WELD DETAILS SHOWN ON SHEETS ST290 – ST294 AND ST289.
SEE SHEET ST295 FOR V1, V2, V3. DETAILS
LETTERS IN HEXAGON INDICATE WELD DETAILS ie. (A)
LETTERS AND NUMBERS IN SQUARES INDICATE RESISTANCE WELD STRENGTH IDENTIFIED IN THE QUALITY CONTROL PROGRAM, i.e., [R1]

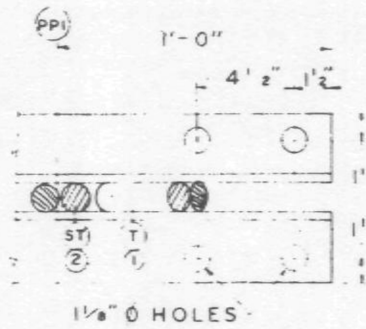

SECTION C-C

DAMPING UNIT CONNECTION PLATE ATTACHED TO BOTTOM CHORD (COL END) IN FIELD. ASSEMBLY BY OTHERS

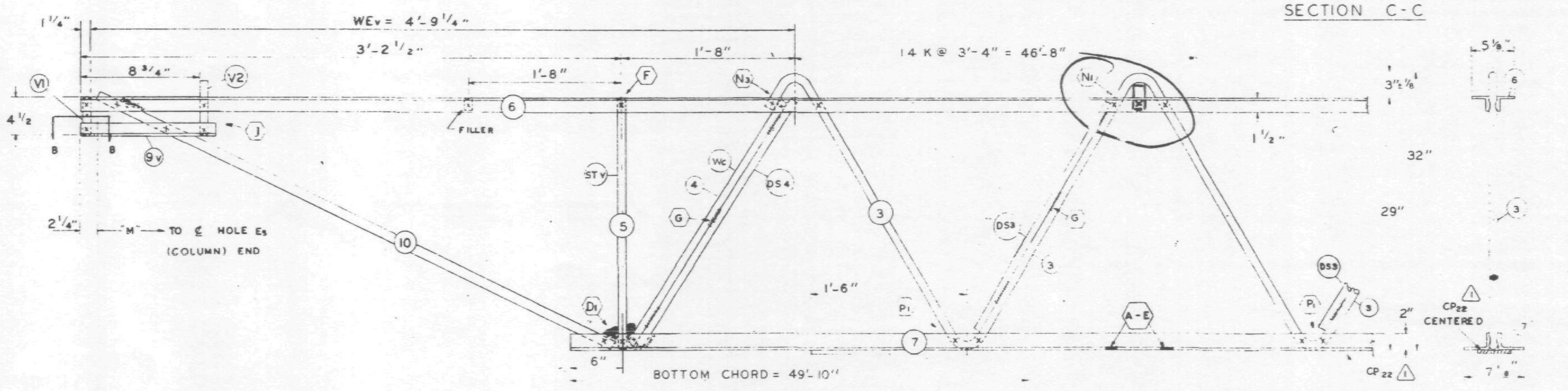

EL END (CORE)

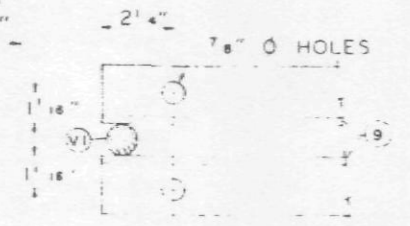

SECTION B-B

FABRICATION REQUIRMENTS	DESIGN	TOLERANCE
CAMBER AT MIDSPAN	2"	± 3/8"
DESIGN DEPTH	29"	± 1/4"
PANEL "K"	3'-4"	± 1/4"
OVERALL LENGTH	57'-9	± 3/8"
WEB DEPTH	31⅞	± 1/4"

NO.	DATE	REVISION	BY
1	1-31-69	AS NOTED	G.D.C.

REF DRWG.

7-AB1-35	1-8-67
7-AB4-50	8-1-68
7-AB3-41	1-6-69
7-AB1-53	7-22-68

TRUSS DESIGNATION	TOP CHORD TWO ANGLES .37				BOTTOM CHORD TWO ANGLES				MAIN WEB "W"					FILLER		"M" C-C HOLES	CONNECTION FILLERS			CHORD PLATE				DOUBLE STRUT			
	MK	TYPE STEEL	CHORD SIZE	LENGTH	MK	TYPE STEEL	CHORD SIZE	LENGTH	MK	TYPE STEEL	DIA	LENGTH	NO. OF K	NO	DIA		NO	DIA	LENGTH	MK	TYPE STEEL	SIZE	LENGTH	MK	TYPE STEEL	DIA	LENGTH
C32T39N-579	6	A242	2"x1½"x37	57'-9"	7	A36	3"x2"x37	49'-10"	3	A242	1.14	88'-1¼"	14 @ 3'-4" = 46'-8"	11	1.14	57'-3¼"	4	[illegible]	4	CP22	A36	6½"x½"	45'-6"	DS2	A242	.75	2'-4⅞"

CHECK DIMENSION FOR TRUSS FAB LOCATION OF TRANS. TRUSS

CL-1	CL-2	CL-3	CL-4	Fs
9'-6½"	22'-10½"	36'-2½"	49'-6½"	5'-2½"

COLUMN END

Es END	TRUSS DESIGNATION	BEARING ANGLES .37				WE	DIAGONAL "T" STRUT				VERTICAL "ST" STRUT				END STIFFENER MK. V1			END STIFFENER MK. V3			DOUBLE STRUT			
		MK	TYPE STEEL	CHORD SIZE	LENGTH		MK	TYPE STEEL	DIA	LENGTH	MK	TYPE STEEL	DIA	LENGTH	TYPE STEEL	DIA	LENGTH	TYPE STEEL	DIA	LENGTH	MK	TYPE STEEL	DIA	LGTH.
	C32T39N-579	9	A242	2"x1½"x25	2'-3"	6'-1¼"	1	A242	1.14	6'-3⅛"	2	A242	1.14	2'-4⅞"	A242	1.14	4⅜"	A242	1.14	2'-9½"	DS1	A242	1.14	6'-3⅛"

CORE END

EL END	TRUSS DESIGNATION	BEARING ANGLES .37				WEv	DIAGONAL "Tv" STRUT				VERTICAL "STv" STRUT				E. STIFFENER MK. V1			E. STIFFENER MK. V2			E. STIFFENER MK. V4			WEB "Wc"					DOUBLE STRUT				DOUBLE STRUT				(5) DOUBLE (REQD) STRUT			
		MK.	TYPE STEEL	CHORD SIZE	LENGTH		MK.	TYPE STEEL	DIA	LENGTH	MK.	TYPE STEEL	DIA.	LENGTH	TYPE STEEL	DIA.	LENGTH	TYPE STEEL	DIA.	LENGTH	TYPE STEEL	DIA.	LENGTH	MK	TYPE STEEL	PCS	DIA	LENGTH	MK.	TYPE STEEL	DIA	LENGTH	MK	TYPE STEEL	DIA	LENGTH	MK	TYPE STEEL	DIA	LENGTH
	C32T39N-579	9	A242	2"x1½"x25	10"	4'-9¼"	10	A242	1.14	3'-7⅜"	5	A242	1.14	2'-4⅞"	A242	1.14	4⅜"	A242	1.14	7⅝"	—	—	—	4	A242	1	1.14	2'-9½"	DS4	A242	.75	2'-9½"	—	—	—	—	DS3	A242	.92	2'-6¾"

2/9/69 SK

PAINT
LACLEDE ELECTROCOAT
RED NO. 10001

STEEL TRUSS DETAILS
FOR
WORLD TRADE CENTER - N.Y.C
FOR
THE PORT OF NEW YORK AUTHORITY

FLOOR TRUSS C32T39N 57'-9" OVERALL
WORLD TRADE CENTER TOWERS A & B

FABRICATION BY LACLEDE STEEL COMPANY

FABRICATED AT MADISON, ILLINOIS		DESIGN DRAWING NO 7-AB1-35	PLATE
APPROVED FOR FABRICATION BY FOR PONYA	DATE	DRAWN BY DATE JAN 20 1969	
APPROVED FOR FABRICATION BY A C WEBER FOR FABRICATOR	DATE	CHECKED BY T.M. CHURA DATE JAN. 21, 1969	IN CHARGE OF PROD. DEV.
DETAILED BY A C WEBER		FABRICATION CONT. NO. WTC 221	SHEET NO ST239N

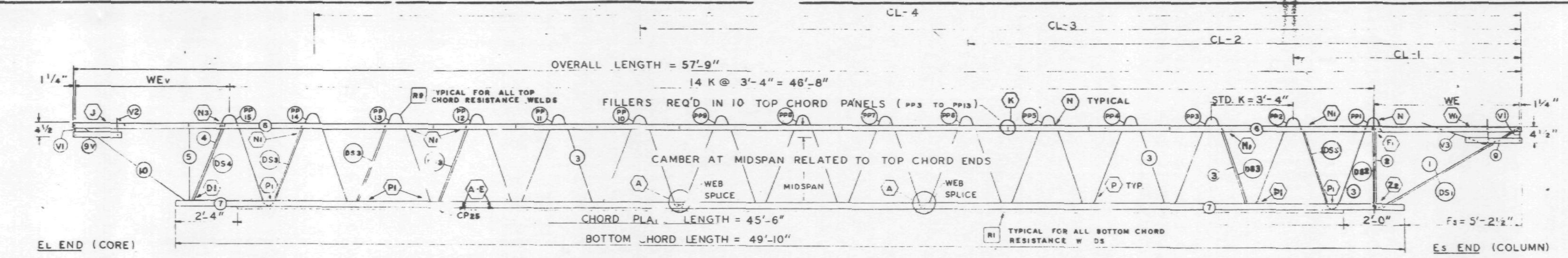

TRUSS ELEVATION

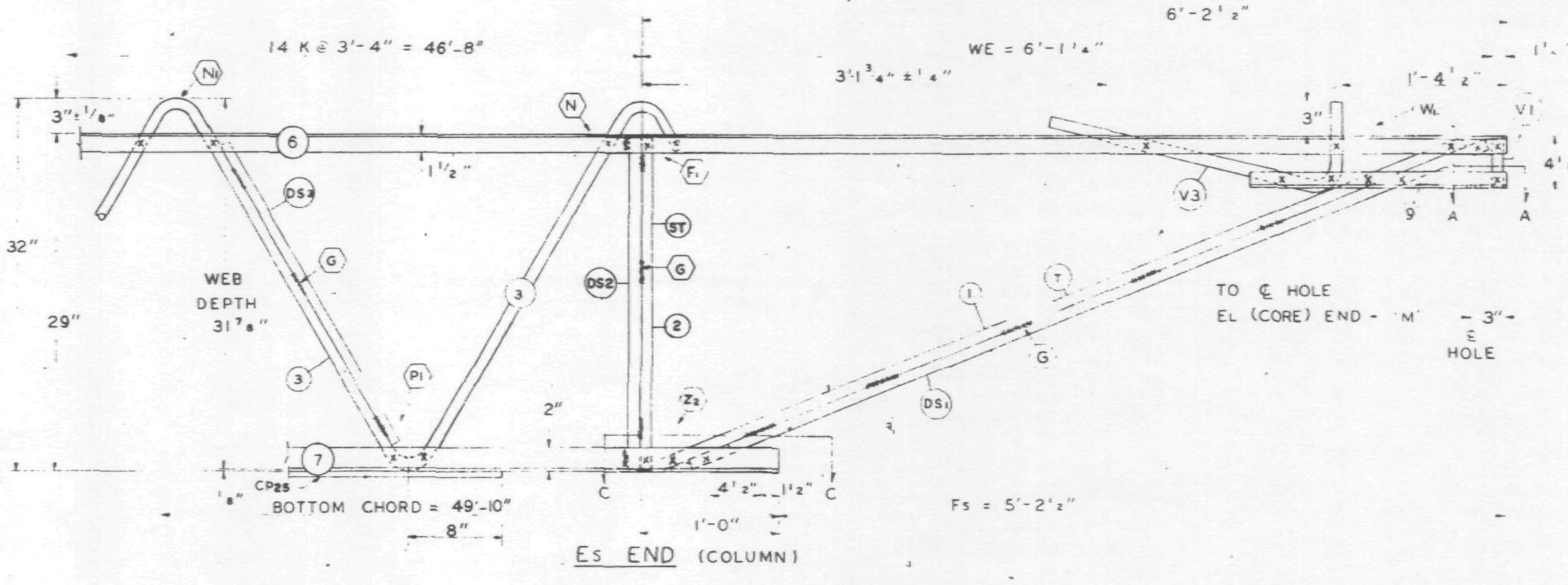

Es END (COLUMN)

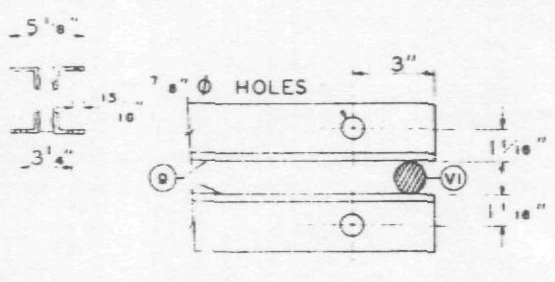

SECTION A-A

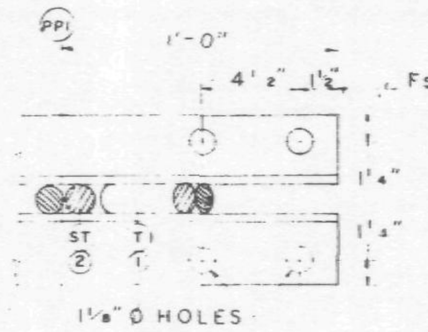

SECTION C-C

DAMPING UNIT CONNECTION PLATE ATTACHED TO BOTTOM CHORD (COL END) IN FIELD. ASSEMBLY BY OTHERS.

ALL PANEL POINTS RESISTANCE WELDED (X)
ARC WELDS INDICATED AT SHADED AREAS AND AT BOTTOM CHORD WEB SPLICES
ALL WELD DETAILS SHOWN ON SHEETS ST290 – ST294 AND ST289.
SEE SHEET ST295 FOR V1, V2, V3, DETAILS
LETTERS IN HEXAGON INDICATE WELD DETAILS ie., ⟨A⟩
LETTERS AND NUMBERS IN SQUARES INDICATE RESISTANCE WELD STRENGTH IDENTIFIED IN THE QUALITY CONTROL PROGRAM, ie., [R1]

FABRICATION REQUIRMENTS	DESIGN	TOLERANCE
CAMBER AT MIDSPAN	2"	±.3 9"
DESIGN DEPTH	29"	± 1/4"
PANEL "K"	3'-4"	± 1/4"
OVERALL LENGTH	5'	± 3/8"
WEB DEPTH	31 7/8"	± 1/4

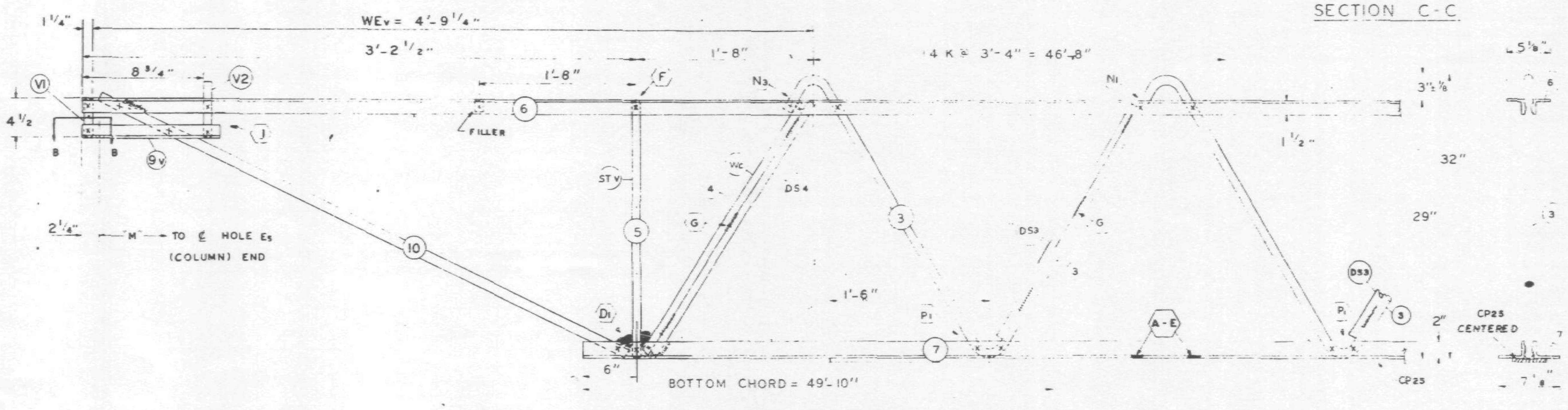

EL END (CORE)

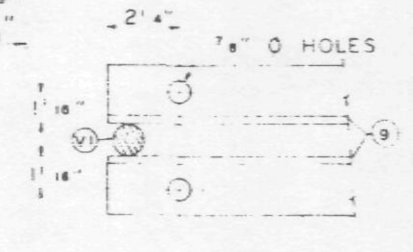

SECTION B-B

Void

REF DRWG.	
7-AB1-35	1-6-67
7-AB4-50	8-1-68
7-AB3-41	1-6-69
7-AB1-53	7-22-68

PAINT
LACLEDE ELECTROCOAT
RED NO. 10001

TRUSS DESIGNATION	TOP CHORD TWO ANGLES				BOTTOM CHORD TWO ANGLES				MAIN WEB "W"					FILLER		"M" ℄ HOLES	CONNECTION FILLERS			CHORD PLATE				DOUBLE STRUT			
	MK	TYPE STEEL	CHORD SIZE	LENGTH	MK	TYPE STEEL	CHORD SIZE	LENGTH	MK	TYPE STEEL	DIA	LENGTH	NO. OF K	NO	DIA		NO	DIA	LENGTH	MK	TYPE STEEL	SIZE	LENGTH	MK	TYPE STEEL	DIA	LENGTH
C32T39N-579	6	A242	2"x1 1/2"x37	57'-9"	7	A36	3"x2"x37	49'-10"	3	A242	1.14	88'-1 1/4"	14 @ 3'-4" = 46'-8"	11	1.14	57'-3 3/4"	—	—	—	CP25	A36	6"x.375	45'-6"	DS2	A242	.75	2'-4 7/8"

COLUMN END	TRUSS DESIGNATION	BEARING ANGLES				WE	DIAGONAL "T" STRUT				VERTICAL "ST" STRUT				END STIFFENER MK V1			END STIFFENER MK V3			DOUBLE STRUT			
Es END		MK	TYPE STEEL	CHORD SIZE	LENGTH		MK	TYPE STEEL	DIA	LENGTH	MK	TYPE STEEL	DIA	LENGTH	TYPE STEEL	DIA	LENGTH	TYPE STEEL	DIA	LENGTH	MK	TYPE STEEL	DIA	LGTH.
	C32T39N-579	9	A242	2"x1 1/2"x25	2'-3"	6'-1 1/4"	1	A242	1.14	6'-3 1/8"	2	A242	1.14	2'-4 7/8"	A242	1.14	4 3/8"	A242	1.14	2'-9 1/2"	DS1	A242	1.14	6'-3 1/8"

CHECK DIMENSION FOR TRUSS FAB. LOCATION OF TRANS. TRUSS				
CL-1	CL-2	CL-3	CL-4	Fs
9'-6 1/2"	22'-10 1/2"	36'-2 1/2"	49'-6 1/2"	5'-2 1/2"

CORE END	TRUSS DESIGNATION	BEARING ANGLES				WEv	DIAGONAL "Tv" STRUT				VERTICAL "STv" STRUT				END STIFFENER MK V1			END STIFFENER MK V2			END STIFFENER MK V4			WEB "Wc"					DOUBLE STRUT				DOUBLE STRUT				(5) DOUBLE (REQD) STRUT			
EL END		MK	TYPE STEEL	CHORD SIZE	LENGTH		MK	TYPE STEEL	DIA	LENGTH	MK	TYPE STEEL	DIA	LENGTH	TYPE STEEL	DIA	LENGTH	TYPE STEEL	DIA	LENGTH	TYPE STEEL	DIA	LENGTH	MK	TYPE STEEL	PCS	DIA	LENGTH	MK	TYPE STEEL	DIA	LENGTH	MK	TYPE STEEL	DIA	LENGTH	MK	TYPE STEEL	DIA	LENGTH
	C32T39N-579	9	A242	2"x1 1/2"x25	10"	4'-9 1/4"	10	A242	1.14	3'-7 3/8"	5	A242	1.14	2'-4 7/8"	A242	1.14	4 3/8"	A242	1.14	7 3/8"	—	—	—	4	A242	1	1.14	2'-9 1/2"	DS4	A242	.75	2'-9 1/2"	—	—	—	—	DS3	A242	.92	2'-6 3/4"

STEEL TRUSS DETAILS
FOR
WORLD TRADE CENTER - N.Y.C.
FOR
THE PORT OF NEW YORK AUTHORITY

FLOOR TRUSS C32T39N 57'-9" OVERALL
WORLD TRADE CENTER TOWERS A&B

FABRICATION BY: LACLEDE STEEL COMPANY			
FABRICATED AT: MADISON, ILLINOIS		DESIGN DRAWING NO 7-AB1-35	PLATE
APPROVED FOR FABRICATION BY FOR P.O.N.Y.A.	DATE	DRAWN BY L.R. DATE: JAN 20 1969	
APPROVED FOR FABRICATION BY A.C. WEBER FOR FABRICATOR	DATE	CHECKED BY T.M. CHURA DATE JAN. 21, 1969	IN CHARGE OF PROD. DEV.
DETAILED BY A.C. WEBER		FABRICATION CONT. NO W.T.C. 221	SHEET NO. ST239N

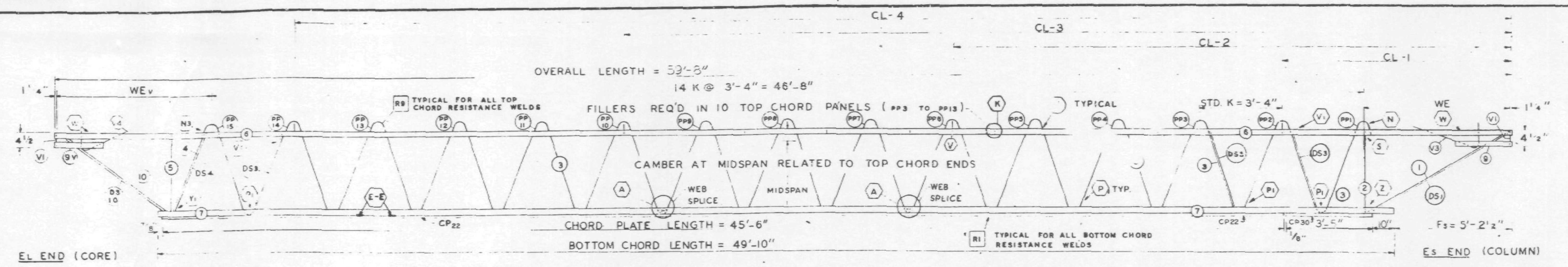

TRUSS ELEVATION

FABRICATION REQUIRMENTS	DESIGN	TOLERANCE
CAMBER AT MIDSPAN	2	± 3/8"
DESIGN DEPTH	29"	± 1/4"
PANEL "K"	3'-4"	± 1/4"
OVERALL LENGTH	59'-8"	± 3/8"
WEB DEPTH	31 7/8"	± 1/4"

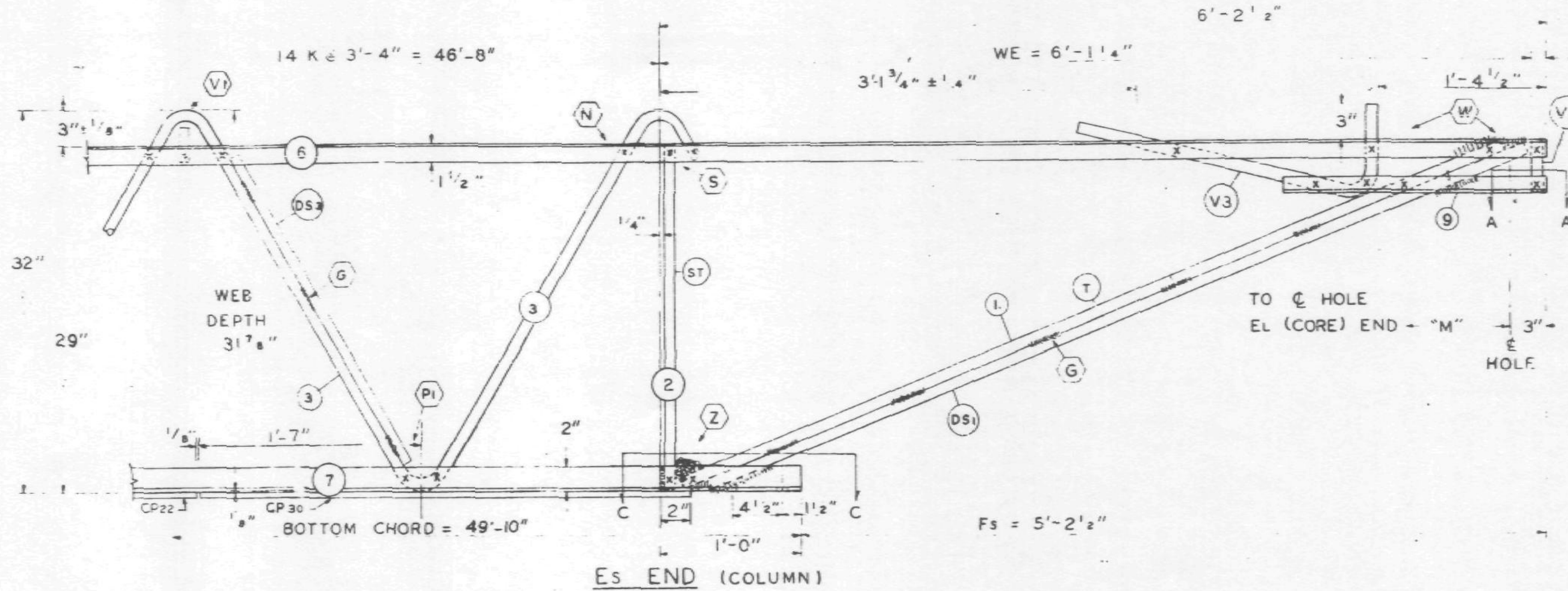

Es END (COLUMN)

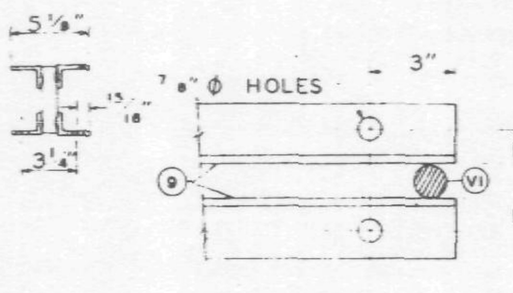

SECTION A-A

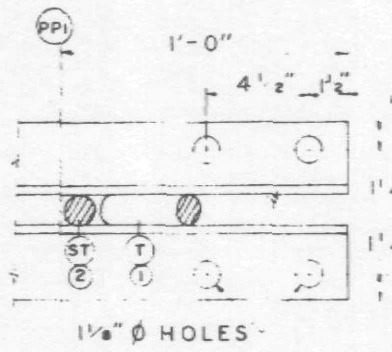

SECTION C-C

ALL PANEL POINTS RESISTANCE WELDED (X)
ARC WELDS INDICATED AT SHADED AREAS AND AT BOTTOM CHORD WEB SPLICES
ALL WELD DETAILS SHOWN ON SHEETS ST290 – ST294 AND ST286.
SEE SHEET ST295 FOR V1, V2, V3, DETAILS
LETTERS IN HEXAGON INDICATE WELD DETAILS i.e. (A)
LETTERS AND NUMBERS IN SQUARES INDICATE RESISTANCE WELD STRENGTH IDENTIFIED IN THE QUALITY CONTROL PROGRAM i.e. [R1]

DAMPING UNIT CONNECTION PLATE ATTACHED TO BOTTOM CHORD (COL END) IN FIELD. ASSEMBLY BY OTHERS

VOID

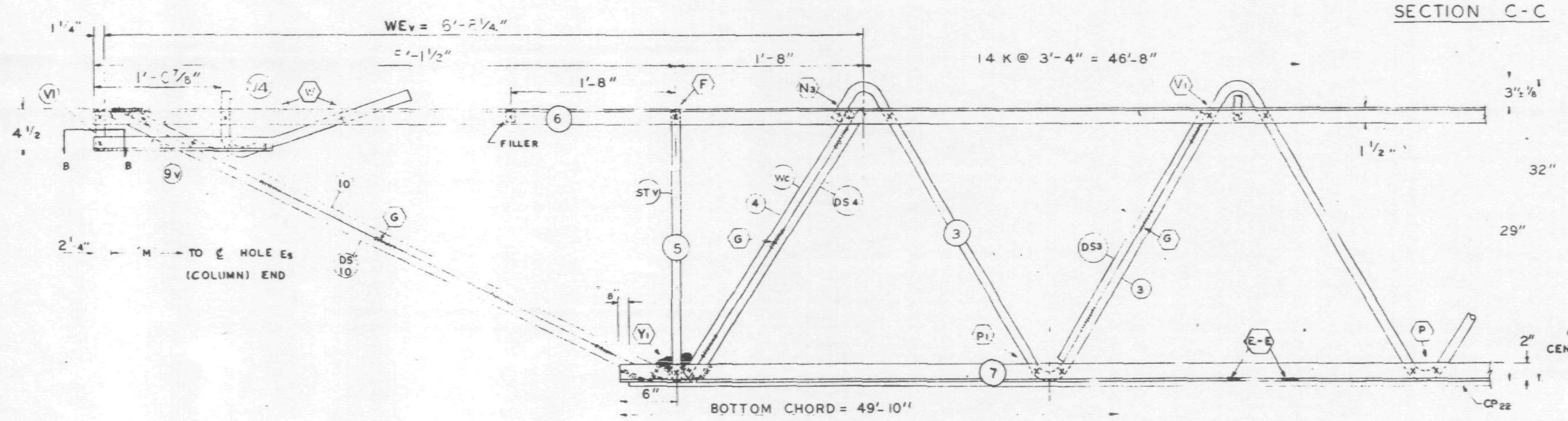

EL END (CORE)

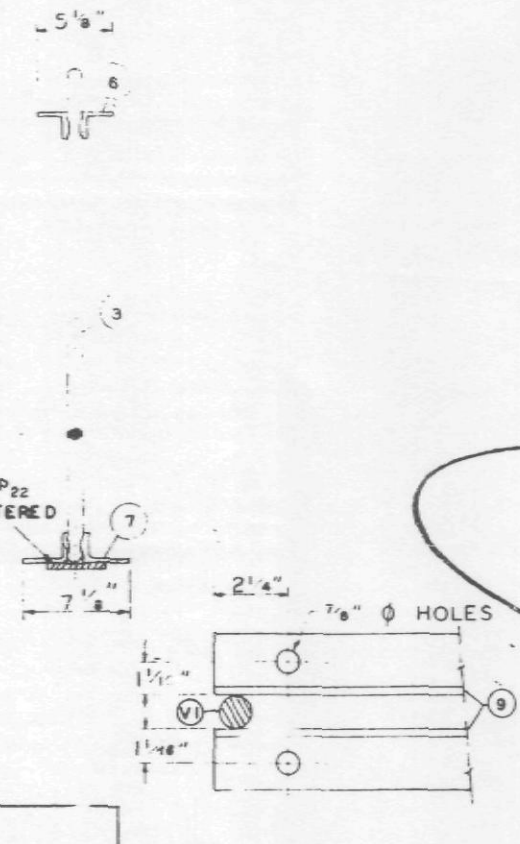

SECTION B-B

NO.	DATE	REVISION	BY

Truss length not reqd

REF DRWG.	
7-AB1-36	1-6-69
7-AB4-30	8-1-68
7-AB3-41	1-6-69
7-AB1-53	7-22-68

PAINT
LACLEDE ELECTROCOAT
REQ NO. 10001

TRUSS DESIGNATION	TOP CHORD TWO ANGLES				BOTTOM CHORD TWO ANGLES				MAIN WEB "W"					FILLER		"M" C/C HOLES	CONNECTION FILLERS			CHORD PLATE				CHORD PLATE			
	MK	TYPE STEEL	CHORD SIZE	LENGTH	MK	TYPE STEEL	CHORD SIZE	LENGTH	MK	TYPE STEEL	DIA	LENGTH	NO. OF K	NO.	DIA.		NC	DIA.	LENGTH	MK	TYPE STEEL	SIZE	LENGTH	MK	TYPE STEEL	SIZE	LENGTH
C32T40C 598	6	A242	2"x1½"x 37	59'-8"	7	A36	3"x 2" x 37	49'-10"	3	A242	1.14	88'-1¼"	14 @ 3'-4" = 46'-8"	11	1.14	5'-2¾"	4	1.14	3"	CP 22	A36	6½" x ½"	45'-6"	CP 30	A36	6½ x 50	3'-5"

COLUMN END	Es END	TRUSS DESIGNATION	BEARING ANGLES				WE	DIAGONAL "T" STRUT				VERTICAL "ST" STRUT				END STIFFENER MK. V1			END STIFFENER MK. V3			DOUBLE STRUT			
			MK	TYPE STEEL	CHORD SIZE	LENGTH		MK	TYPE STEEL	DIA	LENGTH	MK	TYPE STEEL	DIA	LENGTH	TYPE STEEL	DIA.	LENGTH	TYPE STEEL	DIA.	LENGTH	MK	TYPE STEEL	DIA	LGTH.
		C32T40C 598	9	A242	2"x1½"x .37	2'-3"	6'-1¼"	1	A242	1.14	6'-3⅛"	2	A242	1.14	2'-4⅞"	A242	1.14	4⅜"	A242	1.14	2'-9½"	DS 1	A242	92	6'-3⅛"

CHECK DIMENSION FOR TRUSS FAB. LOCATION OF TRANS. TRUSS				
CL-1	CL-2	CL-3	CL-4	Fs
9'-6½"	22'-10½"	36'-2½"	49'-6½	5'-2½"

CORE END	EL END	TRUSS DESIGNATION	BEARING ANGLES				WEv	DIAGONAL "Tv" STRUT				VERTICAL "STv" STRUT				END STIFFENER MK. V1			END STIFFENER MK. V2			END STIFFENER MK. V4			WEB "Wc"					DOUBLE STRUT				DOUBLE STRUT				(3) DOUBLE STRUT (REQD)			
			MK.	TYPE STEEL	CHORD SIZE	LENGTH		MK.	TYPE STEEL	DIA	LENGTH	MK.	TYPE STEEL	DIA.	LENGTH	TYPE STEEL	DIA	LENGTH	TYPE STEEL	DIA.	LENGTH	TYPE STEEL	DIA.	LENGTH	MK	TYPE STEEL	PCS	DIA	LENGTH	MK.	TYPE STEEL	DIA	LENGTH	MK	TYPE STEEL	DIA	LENGTH	MK	TYPE STEEL	DIA	LENGTH
		C32T40C 598	9	A242	2"x1½"x .37	1'-6"	6'-2¼"	10	A242	1.14	5'-4¼"	5	A242	1.14	2'-4⅞"	A242	1.14	4⅜				A242	1.14	2'-2½"	4	A242	1	1.14	2'	DS 4	A242	.92	2'-9½"	DS 10	A242	.92	5'-4¼"	DS 3	A242	.92	2'-6¾"

STEEL TRUSS - DETAILS
FOR
WORLD TRADE CENTER - N.Y.C.
FOR
THE PORT OF NEW YORK AUTHORITY

FLOOR TRUSS C32T40C 59'-8" OVERALL
WORLD TRADE CENTER TOWERS A & B

FABRICATION BY: LACLEDE STEEL COMPANY

FABRICATED AT: MADISON, ILLINOIS		DESIGN DRAWING NO. 7-AB1-36	PLATE
APPROVED FOR FABRICATION BY: ____ FOR P.O.N.Y.A.	DATE	DRAWN BY: ____ DATE: APRIL 29, 1969	
APPROVED FOR FABRICATION BY: ____ FOR FABRICATOR	DATE.	CHECKED BY: T.N.CHURA DATE: APRIL 29, 1969	IN CHARGE OF PROD. DEV.
LACLEDE STEEL CO. DETAILED BY: A.C. WEBER		FABRICATION CONT. NO. W.T.C. 221	SHEET NO. ST240C